For Serial Nos.
670,000 & Higher

eXmark® MFG. CO. INC.

PARTS MANUAL

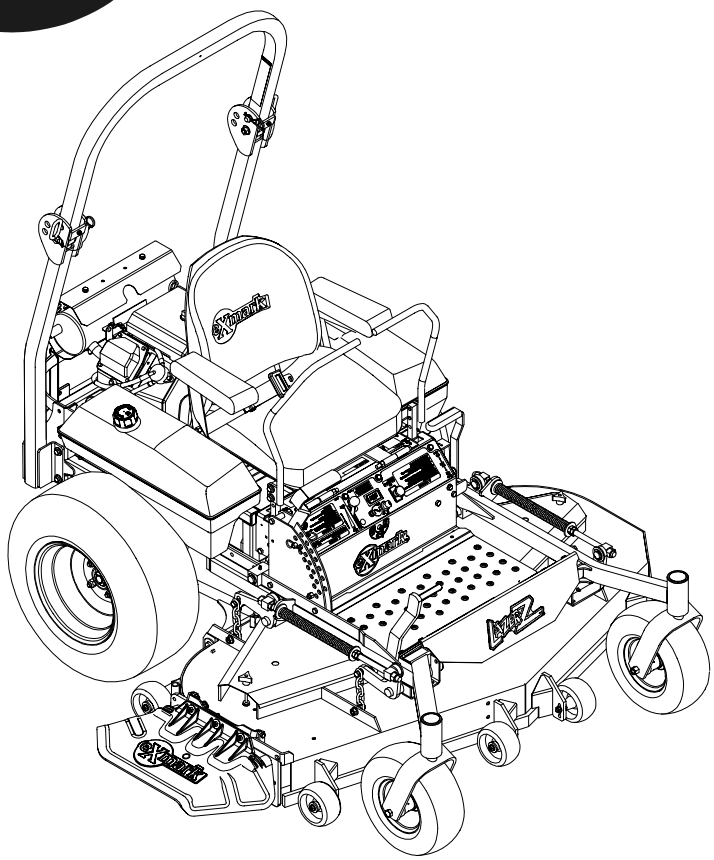

LAZER Z®

ADVANTAGE SERIES MODELS

CONGRATULATIONS on the purchase of your new Exmark mower. This product has been carefully designed and manufactured to give you a maximum amount of dependability and years of trouble-free operation. If additional information is needed, or should you require trained mechanic service, contact your authorized Exmark equipment dealer or distributor. If you need to order replacement parts from your dealer, always give the model number and serial number of your mower as well as the part number, description and quantity of the part needed.

The Serial No. plate is located on the right side of the console. For ease of ordering and reference, we suggest that you record the information requested in the following identification table.

Place Model No. and Serial No. Label Here
(Included in Literature Pack)
or Fill in Below

Model No. _____

Serial No. _____

Engine Model No. and Spec. No. (Code) _____

Engine Serial No. (E/No) _____

Date Purchased _____

Part No. 109-6506 Rev. B

EXMARK PARTS PLUS® PROGRAM

EFFECTIVE DATE: September 1, 1995

Program

If your Exmark dealer does not have the Exmark part in stock, Exmark will get the parts to the dealer the next business day or the part will be FREE* Guaranteed!!

How the Program Works

1. If dealer does not have part in stock for a "down" unit at the time of request by customer, the dealer contacts his distributor by 1:00 p.m., local time, and requests Exmark Parts Plus® shipment of six (6) line items or less.

2. Distributor ships part(s) to dealer or customer, as requested by dealer, same day, overnight UPS Distributor bills dealer for part and freight charges where applicable.

3. If distributor does not have the part(s) in stock to satisfy Exmark Parts Plus® order, he contacts Exmark by 3:00 p.m., central time, with an Exmark Parts Plus® order of six (6) line items or less.

4. If order is received by 3:00 p.m. central time, Exmark ships part(s) direct to dealer or customer, as requested by distributor, same day, overnight UPS. Exmark bills the distributor for parts and shipping charges, where applicable.

5. The customer pays for the <u>part</u> and <u>freight</u> if it is shipped under the Exmark Parts Plus® and if it arrives in accordance to the program.

6. Who pays for the <u>part</u> and <u>freight</u> if it fails to arrive overnight in accordance to the program?

   A. Under any circumstance the customer does not pay.

   B. If the part does not arrive overnight due to:

      1. The dealer not submitting the Exmark Parts Plus® order to his Exmark distributor by 1:00 p.m., the dealer pays for the part and freight.

      2. The Distributor being unable to ship the part the same day or not submitting the Exmark Parts Plus® order to Exmark by 3:00 p.m., central time, the Distributor pays for the part and freight.

      3. Exmark being unable to ship the part and the Exmark parts order is received by 3:00 p.m., central time, Exmark pays for the part and freight.

      4. If the part does not arrive overnight due to the shipper (UPS), the shipper pays for the freight and Exmark pays for the part.

<u>The following restrictions apply</u> -- The Exmark Parts Plus® Program is available only through participating Exmark Dealers and applies only to orders submitted on this program Monday through Thursday. Parts Plus service is available only in the 48 contiguous United States. UPS has initiated a Saturday delivery program to many areas of the continental United States and can be requested for an overnight shipment on Friday to be delivered Saturday. The next day air charge, plus the Saturday delivery fee will be the responsibility of the purchaser. Exmark Mfg. will assume no responsibility for Saturday delivery shipments. To qualify, all Exmark Parts Plus® orders must be received by Exmark by 3:00 p.m., central time. Orders must be six (6) line items or less. Exclusions from the Exmark Parts Plus® Program are: Any wholegood or accessory in its entirety, engines and engine replacement parts, 5-speed Peerless transmissions and 5-speed transaxles, hydraulic or hydrostatic wheel motors, cutter decks and engine decks or any item exceeding United Parcel Service size and weight restrictions.

Due to UPS restrictions, aerosol spray paint is considered a hazardous material and cannot be shipped via UPS next day or Second Day Air.

Exmark Manufacturing stocks a limited supply of parts for transaxles, pumps and wheel motors. These parts can be ordered for Next Day Air shipment but will not be guaranteed per the Parts Plus Program.

WARNING

READ OPERATOR'S MANUAL BEFORE OPERATING OR SERVICING EXMARK EQUIPMENT.

TABLE OF CONTENTS

Description	Page
Decal Group	21-22
Electrical Diagrams	25-26
Electrical Groups	23-24
Electrical Logic Schematics	27-28
Engine Deck Group	16-18
Front Frame Group	9-10
Fuel Group	13
Hydraulics Group	19-20
Main Frame Group	11-12
Motion Control Group	15
Park Brake Group	14
Deck Groups	3-8

52” DECK GROUP

Item	Part No.	Description	Qty.
1	103-3183	Asm, Deck (109-5775-01) W/Decals	1
2	3256-24	Washer, 3/8 SAE	3
3✚	103-2794	Sheave, Blade Drive	3
4	1-513208	Washer, Spring Disk	1
5	1-303334	Washer, 5/16 Spring Disk	1
6	32128-20	Nut, 5/16-18 Whizlock	8
7	1-602913-01	Baffle Wldmt, Discharge	1
8	322-2	Screw, 5/16-18 x 5/8	5
9	1-603299	Roller, Antiscalp	6
10	3290-357	Nut, 3/8-16 Whizlock	18
11	63-8410	Washer	6
12	99-2842	Spacer	6
13	98-5975	Washer, 3/8 Spring Disk	13
14✚	103-8280	Housing W/Bearings	3
15	109-2738	Chute, Discharge 52”	1
16	322-5	Screw, 5/16-18 x 1	5
17	3296-29	Nut, 5/16-18 Nyloc	7
18	1-633357-01	Shield, Belt 52”	2
19	1-323385	Knob, Belt Shield	6
20	1-322110	Belt Guide Wldmt	1
21	3213-5	Screw, 1/2-20 x 2	3
22	323-12	Screw, 3/8-16 x 2 1/2	2
23	1-303537	Stud, Belt Shield	2
24	3256-3	Washer 5/16 Std Flat	4
25	1-323417	Washer, Rubber	2
26	103-3330	Spring, Extension	1
27	1-513435	Washer, Spring Disk 1/2	3
28	103-5677	Spacer	1
29✖	103-5693	Kit, Idler Arm (103-6528-01) W/Bearings	1
30	106-7159	O-ring	2
31	302-40	Zerk, 1/4-20 90°	1
32	3256-4	Washer, 3/8 Std Flat	2
33	3296-39	Nut, 3/8-16 Nyloc	19
34	103-3504	Bearing, Spherical	2
35	1-633109	Idler Pulley 6.00 Dia Flat	2
36	3234-11	Bolt, 3/8-16 x 1 Whizlock	1
37	1-633456	Bushing, Idler	2
38	3217-11	Nut, 5/8-11 Hex	2
39	32128-37	Nut, 7/16-14 Whizlock	16
40	1-603805	Idler Pulley 5.06 O.D V	1
41	1-633366	Belt, Blade Drive 52” Deck	1
42	1-633447	Chain	4

Item	Part No.	Description	Qty.
43	103-1898	Screw, 7/16-14 x 1 5/8 Sp	8
44	103-3505	Seal, Double Lip	1
45	103-9076	Cutter Housing Complete	3
46✚	103-3182	Sheave, Jackshaft	1
47	103-2535	Spacer, Guard Bottom	4
48	323-6	Screw, 3/8-16 x 1	4
49	109-1181	Strut Wldmt, Deck	2
50✚❒	103-9086	Kit, Spindle	3
51	1-633029	Spherical Rod End	2
52	327-11	Screw, 5/8-11 x 5	2
53	3253-8	Lockwasher, 5/8 Reg.Spring	2
54	302-19	Zerk, 1/4-28 Straight	4
55	1-632199-01	Pin Wldmt, Deck Strut	2
56	3219-6	Nut, 5/8-18 Hex	3
57●	3217-46	Nut, HH 3/4-16 Heavy	3
58	103-2982	Key, 1/4 x 3/16 x 3/4	3
59✚	1-643393	Jackshaft	1
60	103-1081	Asm, Strut Long	2
61✚	103-1330	Guard, Bearing Top	3
62	323-7	Screw, Hex Cap 3/8 x 1 1/4	18
63✚	103-9746	Asm, Jackshaft Housing W/Brgs	1
64	103-2802	Washer, Spring Disk 3/4	3
65	103-6402	Blade, Notched.	3
	103-6387	Blade, Low Lift	3
◆	103-6392	Blade, Mulching	3
	103-6382	Blade, Solid	3
	103-6397	Blade, Extreme	3
66	103-3248	Asm, Jackshaft 52	1
67▲	103-3257	Asm, Deck Complete	1
68	103-2916	Guard, Top	1
69	98-5961	Screw, 3/8-16 x 4 Gr 8	1
70	103-3506	Seal, Single Lip	1
71	32120-10	Ring, Retaining	2
72	103-3037	Bushing, Splined	3
73	109-2148	Asm, Discharge Chute	1
74	3256-82	Washer	3
75	3230-22	Bolt, Carriage 5/16-18 x1	3
76	109-0938-01	Hinge, Grass Discharge	1
77	103-9817	Asm, Chain Deck	2
78	103-9792	Asm, Chain Deck	2
79	103-4051	Kit, Anti-scalp	6
80	1-373034	Washer	2

Exmark red touch up paint (spray paint - P/N 1-850337 - .6 oz liquid bottle - P/N 103-9140).

- ◆ Requires installation of Micro-Mulch accessory for proper mulching. Mulch kit P/N MK524Q.
- ✚ Apply Mobil HTS grease (P/N 103-5217 1.5 oz packet) (or a food-grade antisieze) between the jackshaft and bearings, jackshaft and sheaves, spindles and bearings, spindles and sheaves, and under top bearing guard. DO NOT use a copper or nickel based antisieze.
- ▲ Complete deck assembly excludes items #39, #42, #43, and #60 and includes mule drive belt from page 16.
- ✖ Kit also includes items #13 & #33.
- ● Use Pro-Lock, Nut Type (P/N 1-840022, .5ml tube) on nut, Item #57.
- ❒ Kit includes items #21, #27, #57, #58, #64 & #72.

52” DECK GROUP

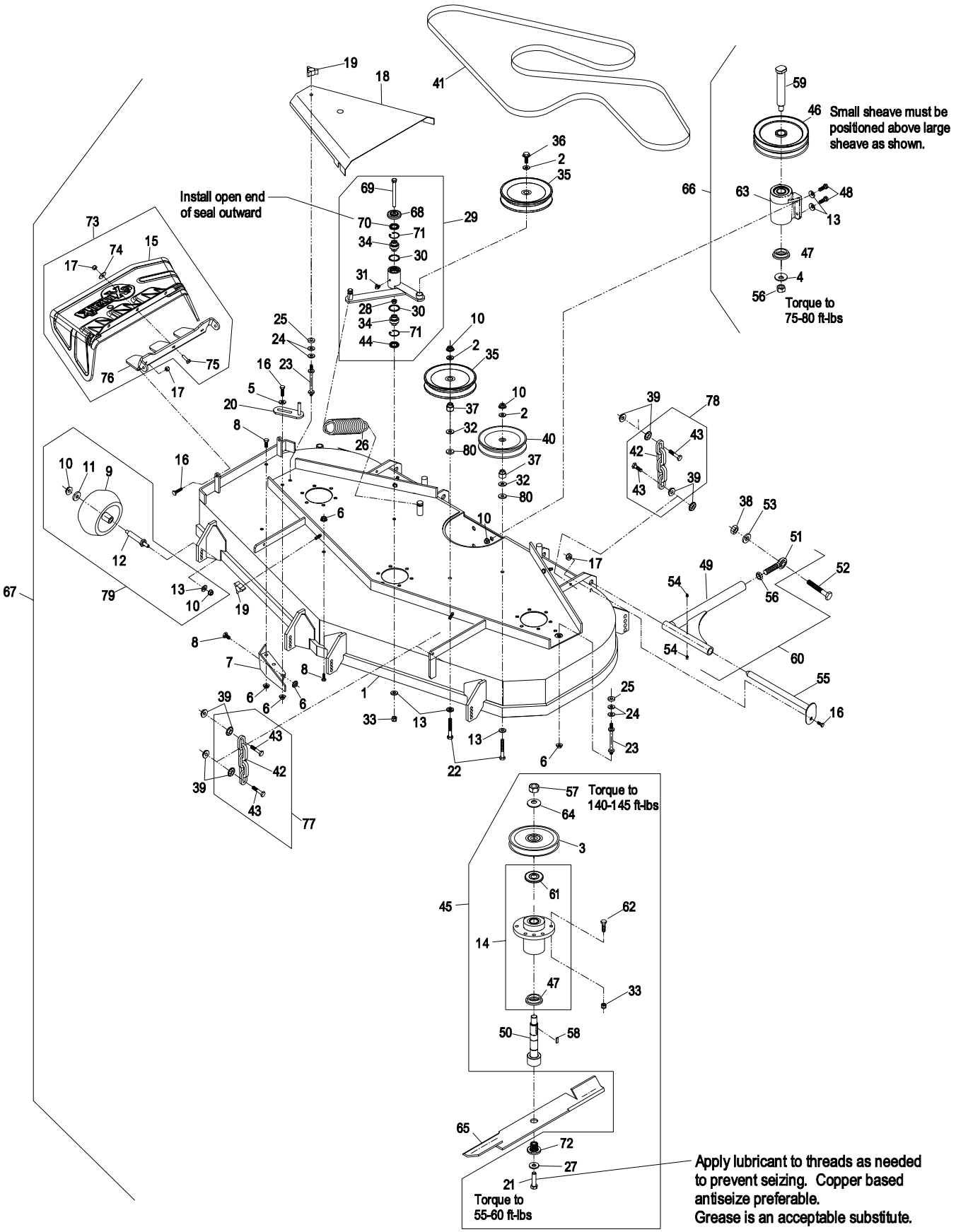

60” DECK GROUP

Item	Part No.	Description	Qty.
1	103-3184	Asm, Deck (109-4081-01) W/Decals	1
2●	3217-46	Nut, Hex 3/4-16 Heavy	3
3	3256-24	Washer, 3/8 SAE	3
4	1-513208	Washer, Spring Disk	1
5	1-303334	Washer, 5/16 Spring Disk	1
6	32128-20	Nut, 5/16-18 Whizlock	8
7	1-602913-01	Baffle Wldmt, Discharge	1
8	322-2	Screw, 5/16-18 x 5/8	5
9	1-603299	Roller, Antiscalp	6
10	3290-357	Nut, 3/8-16 Whizlock	18
11	63-8410	Washer	6
12	99-2842	Spacer	6
13	98-5975	Washer, 3/8 Spring Disk	13
14✚	103-9746	Asm, Jackshaft Housing W/Brgs	1
15	109-2738	Chute, Discharge	1
16	322-5	Screw, 5/16-18 x 1	4
17	3296-29	Nut, 5/16-18 Nyloc	7
18	1-633084-01	Shield, Belt 60”	2
19	1-323385	Knob, Belt Shield	6
20	1-322110	Belt Guide Wldmt	1
21	3213-5	Screw, 1/2-20 x 2	3
22	323-12	Screw, 3/8-16 x 2 1/2	2
23	1-303537	Stud, Belt Shield	2
24	3256-3	Washer 5/16 Std Flat	6
25	1-323417	Washer, Rubber	2
26	103-3330	Spring, Extension	1
27	322-6	Screw, 5/16-18 x 1 1/4	1
28	103-5677	Spacer	1
29✖	103-5693	Kit, Idler Arm (103-6528-01) W/Bearings	1
30	106-7159	O-ring	2
31	302-40	Zerk, 1/4-20 90°.	1
32	3256-4	Washer, 3/8 Std Flat	2
33	3296-39	Nut, 3/8-16 Nyloc	19
34	103-3504	Bearing, Spherical	2
35	1-633109	Idler Pulley 6.00 Dia Flat	2
36	3234-11	Bolt, 3/8-16 x 1 Whizlock	1
37	1-633456	Bushing, Idler	2
38	323-8	Screw, 3/8-16 x 1 1/2	18
39	32128-37	Nut, 7/16-14 Whizlock	16
40	1-603805	Idler Pulley 5.06 O.D. V	1
41	1-633127	Belt, Blade Drive Deck	1
42	1-633447	Chain	4

Item	Part No.	Description	Qty.
43	103-1898	Screw, 7/16-14 x 1 5/8 Sp	8
44	103-3505	Seal, Double Lip	1
45	3217-11	Nut, 5/8-11 Hex	2
46	103-2802	Washer, Spring Disk	3
47	103-9076	Cutter Housing Complete	3
48	323-6	Screw. 3/8-16 x 1	4
49	109-1181	Strut Wldmt, Deck	2
50✚	103-2794	Sheave, Blade Drive	3
51	1-633029	Spherical Rod End	2
52	327-11	Screw, 5/8-11 x 5	2
53	3253-8	Lockwasher,5/8 Reg.Spring	2
54	302-19	Zerk, 1/4-28 Straight	4
55	1-632199-01	Pin Wldmt, Deck Strut	2
56	3219-6	Nut, 5/8-18 Hex	3
57✚❒	103-9086	Kit, Spindle	3
58✚	103-3046	Sheave, Jackshaft Double	1
59	103-2982	Key, 1/4 x 3/16 x 3/4	3
60✚	1-643393	Jackshaft	1
61✚	103-1330	Guard, Bearing Top	3
62✚	103-8280	Housing W/Bearings	3
63	1-513435	Washer, Spring Disk 1/2	3
64	103-2535	Spacer, Guard Bottom	4
65	103-6403	Blade, Notched	3
	103-6388	Blade, Low Lift	3
✦	103-6393	Blade, Mulching	3
	103-6383	Blade, Solid	3
	103-6398	Blade, Extreme	3
66	103-1081	Asm, Strut Long	2
67	103-3249	Jackshaft Assy	1
68▲	103-3258	Complete Deck Assy	1
69	103-2916	Guard, Top	1
70	98-5961	Screw, 3/8-16 x 4 Gr 8	1
71	103-3506	Seal, Single Lip	1
72	32120-10	Ring, Retaining	2
73	103-3037	Bushing, Splined	3
74	109-2148	Asm, Discharge Chute	1
75	3256-82	Washer	3
76	3230-22	Bolt, Carriage 5/16-18 x1	3
77	109-0938-01	Hinge, Grass Discharge	1
78	103-9792	Asm, Chain Deck	4
79	103-4051	Kit, Anti-scalp	6
80	1-373034	Washer	2

Exmark red touch up paint (spray paint - P/N 1-850337 - .6 oz liquid bottle - P/N 103-9140).

✦ Requires installation of Micro-Mulch accessory for proper mulching. Mulch kit P/N MK604Q.

✚ Apply Mobil HTS grease (P/N 103-5217 1.5 oz packet) (or a food-grade antisieze) between the jackshaft and bearings, jackshaft and sheaves, spindles and bearings, spindles and sheaves, and under top bearing guard. DO NOT use a copper or nickel based antisieze.

▲ Complete deck assembly excludes items #39, #42, #43, and #66 and includes mule drive belt from page 16.

✖ Kit also includes items #13 & #33.

● Use Pro-Lock, Nut Type (P/N 1-840022, .5ml tube) on nut, Item #2.

❒ Kit includes items #2, #21, #46, #59, #63 & #73.

60” DECK GROUP

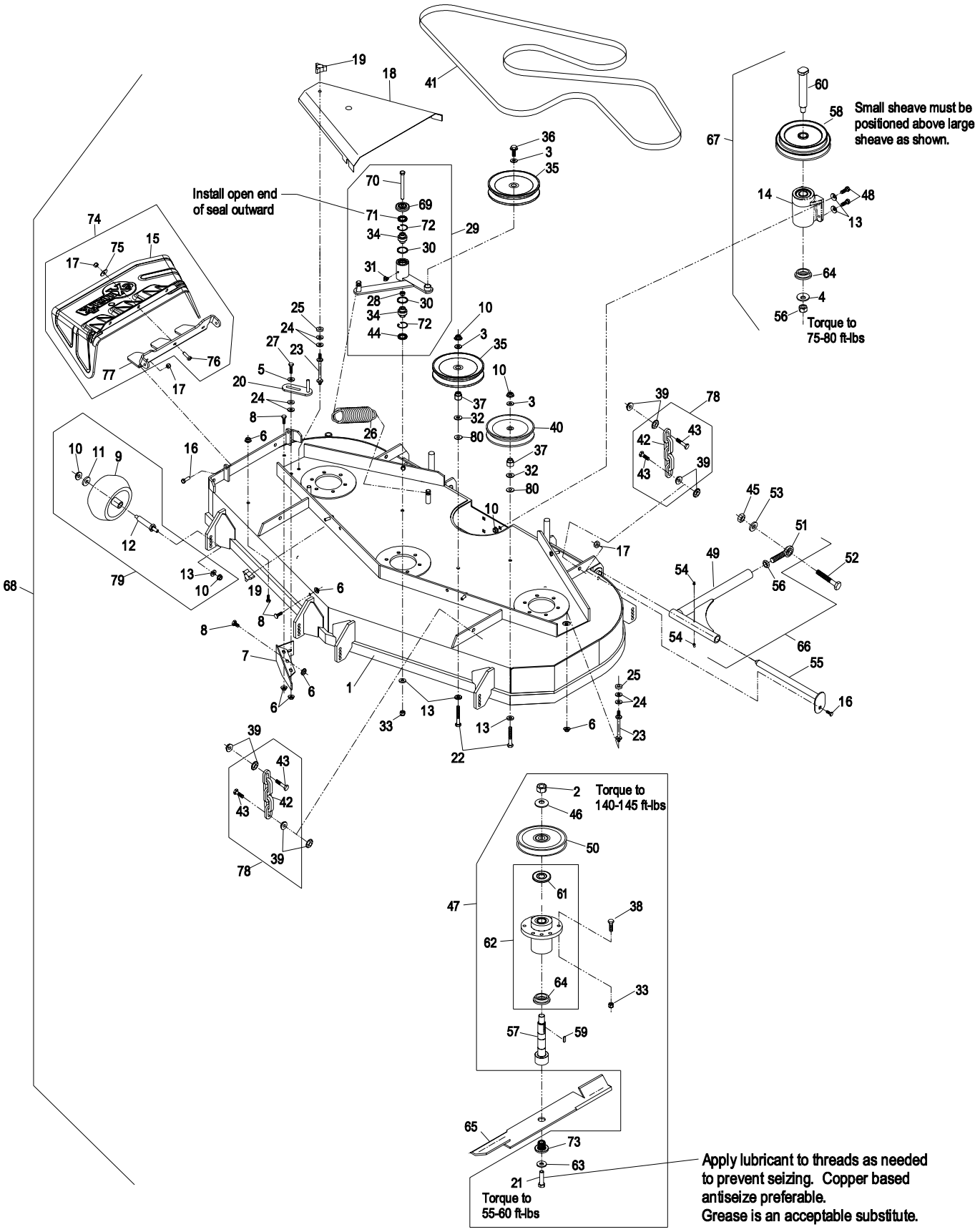

72” DECK GROUP

Item	Part No.	Description	Qty.
1	1-643052	Belt, Blade Drive 72”	1
2	1-323385	Knob, Belt Shield	6
3	1-643076-01	Shield, Belt 72” RH (Shown)	1
	1-643075-01	Shield, Belt 72” LH	1
4	3234-11	Bolt, 3/8-16 x 1 Whizlock	1
5	3256-24	Washer, 3/8 SAE	3
6	1-633109	Idler Pulley 6.00 Dia Flat	2
7	103-3330	Spring, Extension	1
8	3290-357	Nut, 3/8-16 Whizlock	18
9	1-633456	Bushing, Idler	2
10	3256-4	Washer, 3/8 Std Flat	2
11	63-8410	Washer	6
12	3296-39	Nut, 3/8-16 Nyloc	19
13	103-9792	Asm, Chain Deck	4
14	1-513208	Washer, Spring, Disk	1
15	302-40	Zerk	1
16	103-2802	Washer, Spring, Disk 3/4	3
17	3219-6	Nut, 5/8-18 Hex	3
18✚	103-9746	Asm, Jackshaft Housing W/Brgs	1
19✚	103-2795	Sheave, Blade Drive	3
20	1-303334	Washer, 5/16 Spring, Disk	1
21	1-322110	Belt Guide Wldmt	1
22✖	103-5693	Kit, Idler Arm (103-6528-01) W/Bearings	1
23	32128-20	Nut, 5/16-18 Whizlock	9
24	323-6	Screw, .3/8-16 x 1	4
25	98-5975	Washer, 3/8 Spring, Disk	13
26	32128-37	Nut, 7/16-14 Whizlock	16
27	103-1898	Screw, 7/16-14 x 1-5/8	8
28	1-633447	Chain	4
29	3217-11	Nut, 5/8-11 Hex	2
30	3253-8	Lockwasher, 5/8 Reg.Spring	2
31	1-633029	Spherical Rod End	2
32	327-11	Screw, 5/8-11 x 5	2
33	109-1182	Strut Wldmt, Deck	2
34	1-632199-01	Pin Wldmt, Deck Strut	2
35	302-19	Zerk, 1/4-28 Straight	4
36	323-8	Screw, 3/8-16 x 1 1/2	18
37	1-323417	Washer, Rubber	2
38	3256-3	Washer 5/16 Std Flat	4
39	1-303537	Stud, Belt Shield	2
40	109-7477	Asm, Deck (109-5855-01) W/Decals	1
41	3217-46	Nut, HH 3/4-16 Heavy	3

Item	Part No.	Description	Qty.
42	1-513435	Washer, Spring Disk 1/2	3
43	103-2982	Key, 1/4x3/16x3/4	3
44✚	103-3046	Sheave, Double	1
45✚	1-643393	Jackshaft	1
46	103-2535	Spacer, Guard Bottom	4
47✚	103-1330	Guard, Bearing Top	3
48✚	103-8280	Housing W/Bearings	3
49	103-6404	Blade, Notched	3
◆	103-6394	Blade, Mulching	3
	103-6389	Blade, Low Lift	3
	103-6384	Blade, Solid	3
	103-6399	Blade, Extreme	3
50	3213-5	Screw, HH 1/2-20 x 2	3
51	323-12	Screw, HH 3/8-16 x 2 1/2	2
52	103-4051	Kit, Anti-scalp	6
53	1-602913-01	Baffle Wldmt, Discharge	1
54	322-2	Screw, 5/16-18 x 5/8	5
55	98-5961	Screw, 3/8-16 x 4 Gr8	1
56	109-2148	Asm, Discharge Chute	1
57	1-603299	Roller, Anti-Scalp	6
58	322-5	Screw, 5/16-18 x 1	5
59	109-2738	Chute, Discharge	1
60	3296-29	Nut, 5/16-18 Nyloc	7
61	3230-22	Bolt, Carriage 5/16-18 x1	3
62	1-603805	Idler Pulley 5.06 O.D. V	1
63✚❒	103-9086	Kit, Spindle	3
64	103-9074	Cutter Housing Complete	3
65	103-1083	Asm, Strut 72” Long	2
66	103-3249	Jackshaft Asm	1
67▲	103-3259	Complete Deck Asm	1
68	103-3505	Seal, Double, Lip	1
69	103-2916	Guard, Top	1
70	103-5677	Spacer	1
71	103-3506	Seal, Single Lip	1
72	32120-10	Ring, Retaining	2
73	103-3504	Bearing, Spherical	2
74	106-7159	O-ring	2
75	3256-82	Washer	3
76	109-0938-01	Hinge, Grass Discharge	1
77	103-3037	Bushing, Splined	3
78	99-2842	Spacer	6
79	1-373034	Washer	2

Exmark red touch up spray paint - P/N 1-850337.

◆ Requires installation of Micro-Mulch accessory for proper mulching. Mulch kit P/N MK724.

✚ Apply Mobil HTS grease (P/N 103-5217 1.5 oz packet) (or a food-grade antisieze) between the jackshaft and bearings, jackshaft and sheaves, spindles and bearings, spindles and sheaves, and under top bearing guard. DO NOT use a copper or nickel based antisieze.

▲ Complete deck assembly excludes items #26, #27, #28, and #65 and includes mule drive belt from page 16.

✖ Kit includes items #12 and #25.

❒ Kit includes items #16, #41, #42, #43, #50 & #77.

72” DECK GROUP

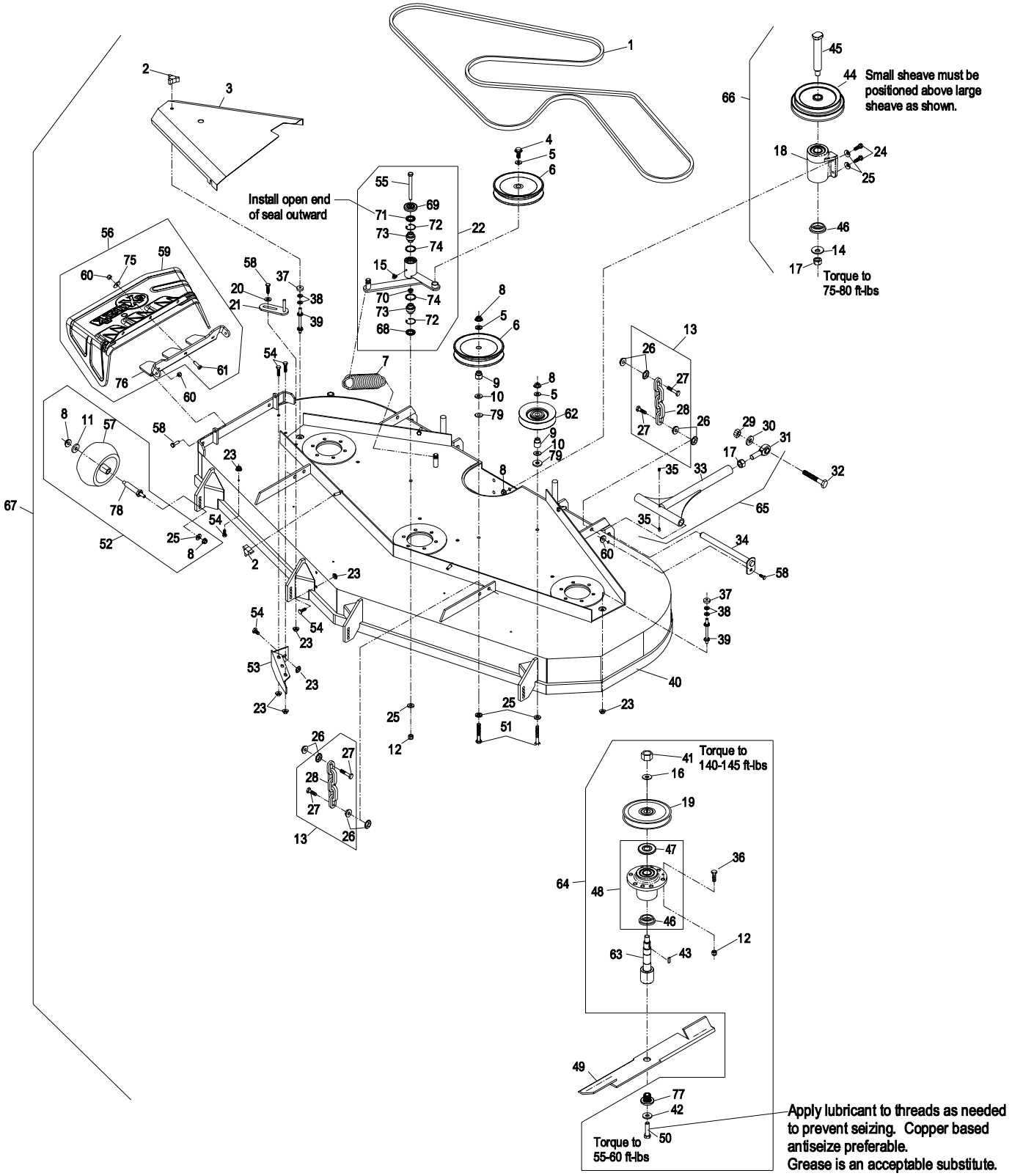

FRONT FRAME GROUP

Item	Part No.	Description	Qty.
1▲	103-5473	Asm, Front Frame, 52”	1
▲	103-5474	Asm, Front Frame, 60”	1
▲	103-5475	Asm, Front Frame, 72”	1
2	302-19	Zerk, 1/4-28 Straight	5
3	109-1903	Asm, Front Floorpan W/Decals	1
4	1-543509	Cone, Bearing Tapered Roller	4
5	103-2084	Asm, Lever(103-2083-03)W/Grip	1
6	1-633295	Grip, Lift Lever	1
7	103-2064-03	Arm Wldmt, Deck Lift	1
8	1-633325	Spring, Compression	1
9	3256-24	Washer, 3/8 SAE Flat	1
10	3296-39	Nut, Nyloc 3/8-16	4
11	32151-103	E-Ring	5
12	1-633068	Arm, Deck Lift	2
13	1-633889-01	Plate, Deck Lift	1
14	109-1900	Plate Wldmt, Deck Lift	1
15	1-633082	Bushing, Lift Lever	1
16	1-633080	Bushing, Lift Lever	1
17	323-13	Screw, 3/8-16 x 2 3/4	1
18	1-633097	Hitch Pin W/Lanyard	1
19	1-806005	Hairpin Cotter	1
20	323-9	Screw, 3/8-16 x 1 3/4	1
21	98-5975	Washer, 3/8 Disc Spring	12
22	3290-357	Nut, Whizlock 3/8-16	15
23	323-5	Screw, HH 3/8-16 X 7/8	1
24	323-7	Screw, 3/8-16x1 1/4	12
25	3256-29	Washer, 7/8 SAE Flat	4
26	1-633096	Rod, Deck Lift	2
27	3217-11	Nut, 5/8-11 Regular	8
28	1-633441	Swivel, Deck Mount	4
29	3256-7	Washer, 5/8 Std Flat	4
30	1-633064	Spring, Deck Support	2
31	3218-6	Jam Nut, 5/8-11	4
32	103-4882	Cap, Grease	2
33	109-1902	Asm, Liftout Floorpan W/Decals	1
34	1-543511	Seal, Grease	2

Item	Part No.	Description	Qty.
35	1-632511-01	Caster Wldmt (52” & 60”)	2
	103-1474-01	Caster Wldmt (72”)	2
36	3296-51	Nut, 3/4-10 Nyloc	2
37	1-633508	Washer, Spring Disk	6
38	325-36	Screw, 1/2-13 x 7 1/2 (52” & 60”)	2
	325-39	Screw, 1/2-13 x 9 1/2 (72”)	2
39	1-811010	Plug	2
40	103-2768	Guard, Seal	4
41	3296-23	Nut, 1/2-13 Nyloc	2
42	3230-1	Bolt, Carriage 5/16-18 x 3/4	4
43	103-0063	Seal, Bearing	4
44	1-633585	Bearing Cone	4
45	32128-20	Nut, Whizlock 5/16-18	4
46	103-3155	Axle, Caster	2
47	103-1918	Bushing	2
48	323-29	Screw, 3/8-16 x 1 3/8	2
49	32151-29	Ring, Retaining	2
50	3274-18	Screw, Socket HD5/16-18x1 1/4	2
51	1-543508	Bearing Cup, Tapered Roller	4
52✚	103-3051	Spacer, Nut	4
53	103-5189	Asm, Caster Wheel (Pneumatic) (52” & 60”)	2
	1-633002	Tire, 13 x 5.0-6 4 Ply (Pneumatic) (52” & 60”)	2
	103-5188	Asm, Caster Wheel (Pneumatic) (72”)	2
	1-523009	Tire,13 x 6.50-6 4 Ply (Pneumatic) (72”)	2
	103-3785	Asm, Caster Wheel (Semi-Pneumatic) (52” & 60”)	2
	103-3799	Asm, Caster Wheel (Semi-Pneumatic) (72”)	2
54	3218-2	Jam Nut, 5/16-18	2
55	103-1955-01	Weldmt, Front Lift Shaft (LH)	1
56	103-2013-01	Weldmt, Front Lift Shaft (RH)	1
57	1-523157	Washer, Spacer	2
58	1-634439	Asm, Deck Lift Spring (52” & 60”)	2
	103-2047	Asm, Deck Lift Spring (72”)	2

Exmark red touch up paint (spray paint - P/N 1-850337 - .6 oz liquid bottle - P/N 103-9140).

✚ Use Pro-Lock, Nut Type (P/N 1-840022, .5ml tube) on spacer nut, Item #52.

▲ Includes frame weldment plus items #2, #32, #34, #39, #49, #51, #55, #56, and #57.

FRONT FRAME GROUP

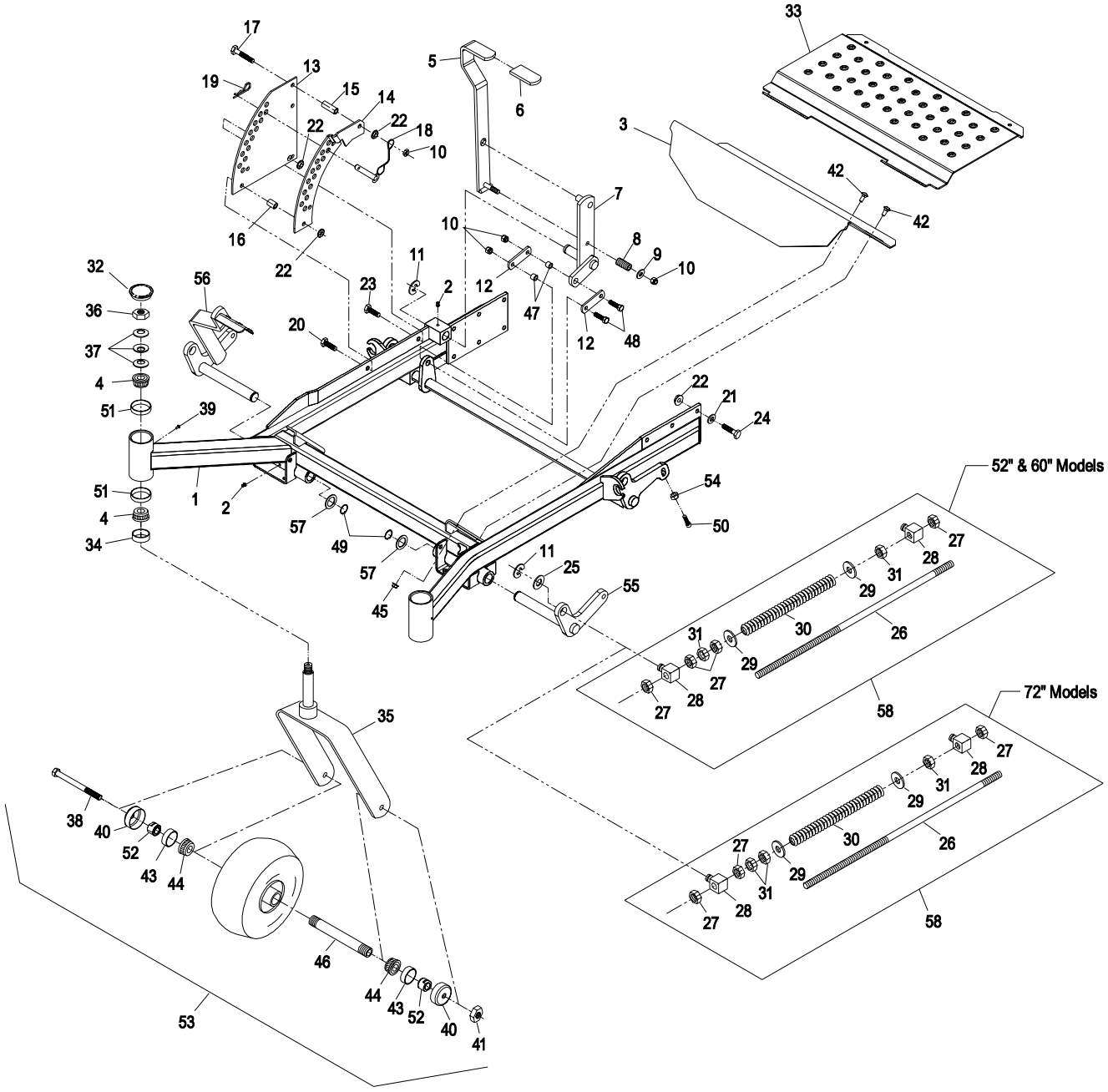

MAINFRAME GROUP

Item	Part No.	Description	Qty.
1	1-643255	Track, Seat (4” Adjustable)	1
	103-8386	Spring, Seat Rail	1
2●	103-3524	Seat	1
3	1-543401	Spacer, Seat Track	2
4	322-3	Screw, 5/16-18 x 3/4	6
5	103-3521	Cushion, Seat	1
6	103-3520	Cushion, Backrest	1
7	103-0292	Cushion, Armrest (RH)	1
8✳	103-0291	Cushion Armrest (LH)	1
9	1-633859	Seat Frame	1
10	3256-3	Washer, 5/16 Std Flat	2
11	109-3966	Asm, Frame (109-3965-03) W/Decals	1
12	1-653010	Wheel/Tire Asm (52”)	2
	1-653160	Tire, 23x9.50-12 4 Ply (52”)	2
	1-653158	Wheel (52”)	2
	1-633970	Wheel/Tire Asm (60” & 72”)	2
	1-633992	Tire, 24x12-12 4 Ply (60” & 72”)	2
	1-633993	Wheel (60” & 72”)	2
13	109-1907	Asm, Console (109-0647-03) W/Decals	1
14	103-4423	Asm, Seat Frame	1
15	242-50	Nut, Wheel 1/2-20	8
16	1-633293	Rod, Seat Hold-Up	1
17	322-5	Screw, 5/16-18 x 1	1
18	323-39	Screw, 3/8-16 x 5	2
19	3296-2	Nut, Nyloc #10-24	2
20	3296-29	Nut, Nyloc 5/16-18	3
21	3296-39	Nut, Nyloc 3/8-16	3
22	3290-357	Nut, Whizlock 3/8-16	10
23	32128-20	Nut, Whizlock 5/16-18	8
24	323-20	Screw, 3/8-16 x 3-1/4	1
25	3256-24	Washer, 3/8 SAE Flat	1

Item	Part No.	Description	Qty.
26	110-0883	Kit, Seat Belt	1
27	107-3083	Latch, Seat	1
28	322-4	Screw, 5/16-18 x 7/8	2
29	1-513658	Bumper	2
30	3256-23	Washer, 5/16 SAE Flat	6
31	103-4434	Grip	1
32	323-6	Screw, 3/8-16 x 1	2
33	1-633964-03	Stop, Park Brake	1
34	1-633696	Cable, Throttle	1
35	103-8383	Bolt, Seat Cushion	11
36	1-513762	Clip, Loom	1
37	32128-33	Nut, Whizlock 1/4-20	1
38	3212-4	Screw, 7/16-20 x 1.00	2
39	3296-7	Nut, Nyloc 7/16-20	2
40	1-513592	Ball, Red (Throttle)	1
41	107-0075	Bushing	1
42	107-0076	Spring	1
43	107-3058	Catch, Seat Latch	1
44	1-603336	Cable, Choke	1
45	107-3155	Cotter, Hair Pin Double Loop	2
46	32128-23	Nut, Hex Flange Side Lock 1/2-13	2
47	3296-73	Nut, Nyloc 1/4-20 (black)	2
48	1-807513	Screw, #10-24 x 1/2	2
49■	103-4553	Asm, ROPS Fold Pin	2
50	323-6	Screw, Hex Cap 3/8 x 1	8
51	109-2365	Bumper	2
52	98-5975	Washer, Spring Disk 3/8	8
53	321-6	Screw, 1/4-20 x 1	1
54	1-303335	Plastic Tie (Large)	1
55	325-13	Screw, 1/2-13 x 3 1/4	2
56◆	103-8436	Kit, ROPS LZ	1

Exmark black touch up spray paint - gloss black.

● Includes armrests and seat back decal. Does not include seat belt or tracks.

✳ Not illustrated.

■ Includes ROPS fold pin plus hairpin, item #45.

◆ Rollover protection frame is serviced as a complete assembly only. Includes complete ROPS frame, mounting hardware, fold pivot and locking hardware, seat frame assembly item #14, catch item #43, and seat belt assembly item #26.

MAINFRAME GROUP

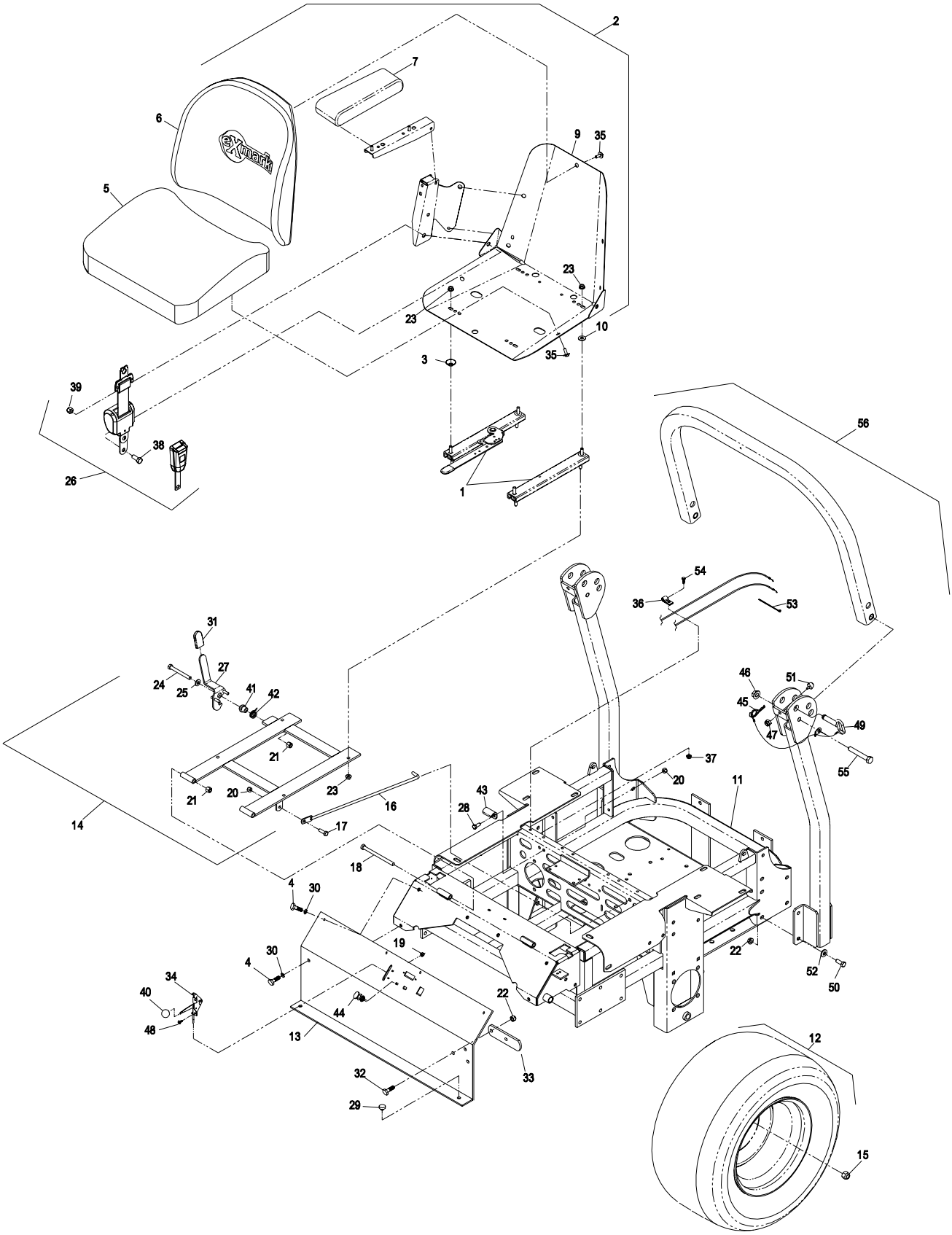

FUEL GROUP

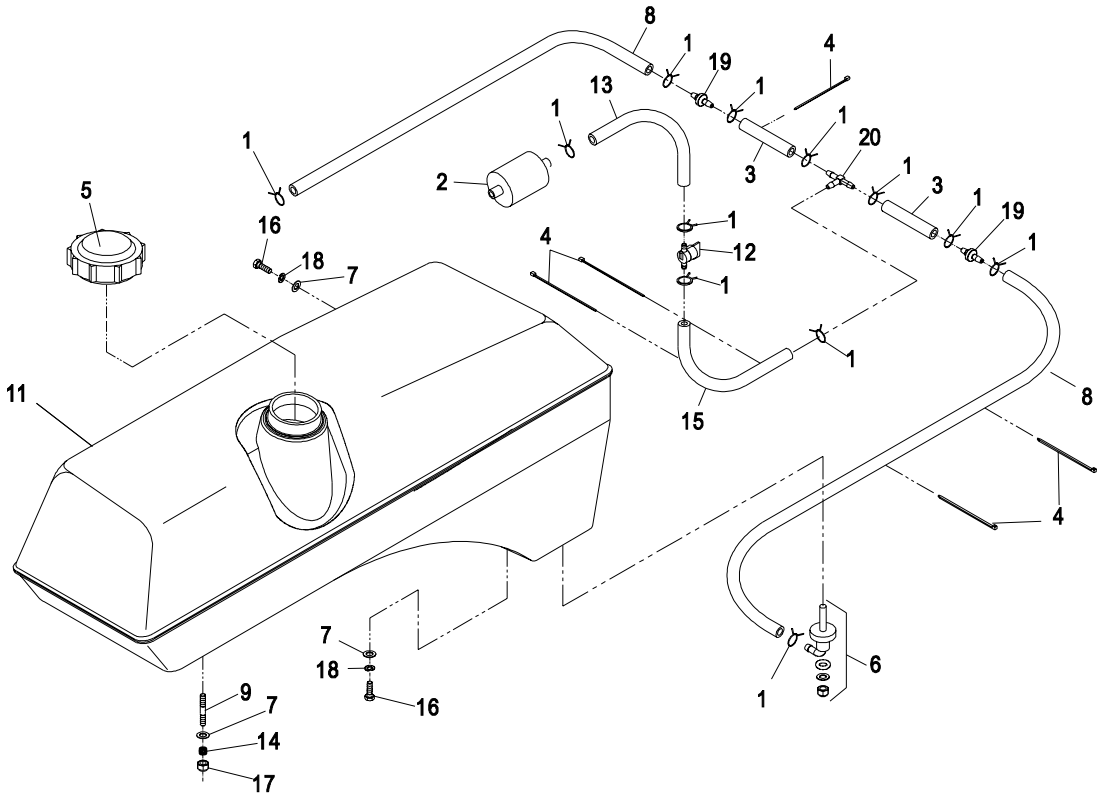

Item	Part No.	Description	Qty.
1	1-303077	Clamp, Fuel Line	12
2✚	**Kohler**	Part No. 2405010 Fuel Filter	1
	Kawasaki	Part No. 49019-7001 Fuel Filter	1
3	103-0304	Hose, Fuel Line 2 1/2”	2
4	1-303335	Plastic Tie (Large)	5
5	109-0346	Cap, Fuel Tank	2
6●	103-2605	Fitting, Fuel Blkhd W/Screen	2
	103-2784	O-Ring	2
7	3256-23	Washer, 5/16 SAE	10
8	108-4582	Hose, Fuel Line 21"	2
9◆	1-633023	Stud, Fuel Tank	6
10❑✳	103-2132	Asm, Tank Fuel (LH)	1

Item	Part No.	Description	Qty.
11✳	103-2133	Asm, Tank Fuel (RH)	1
12	1-603770	Valve, Fuel	1
13	109-0660	Hose, Fuel Line 3 1/2" (Kohler)	1
	109-0293	Hose, Fuel Line 8 1/2” (Kawasaki)	1
14	1-633349	Spring, Fuel Tank	6
15	109-0281	Hose, Fuel Line 26”	1
16	322-3	Screw, 5/16-18 x 3/4	4
17	3296-47	Nut, Thin Nyloc 5/16-18	6
18	1-805005	Washer, Lock 5/16	4
19	99-5000	Valve, Fuel Check	2
20	99-5005	Fitting, Barbed Tee	1

✚ Refer to Engine Owner’s Manual (Fuel Filter **Must** be 15 Micron or smaller).
● Use Pro-lock, Nut type (Part No. 1-840022), .5ml tube on fuel fitting threads.
◆ Use Pro-lock, Retaining Type (Part No. 1-840023), .5cc tube on stud threads going into the tank.
✳ Includes tank, cap, fitting & studs.
❑ Not illustrated.

PARK BRAKE GROUP

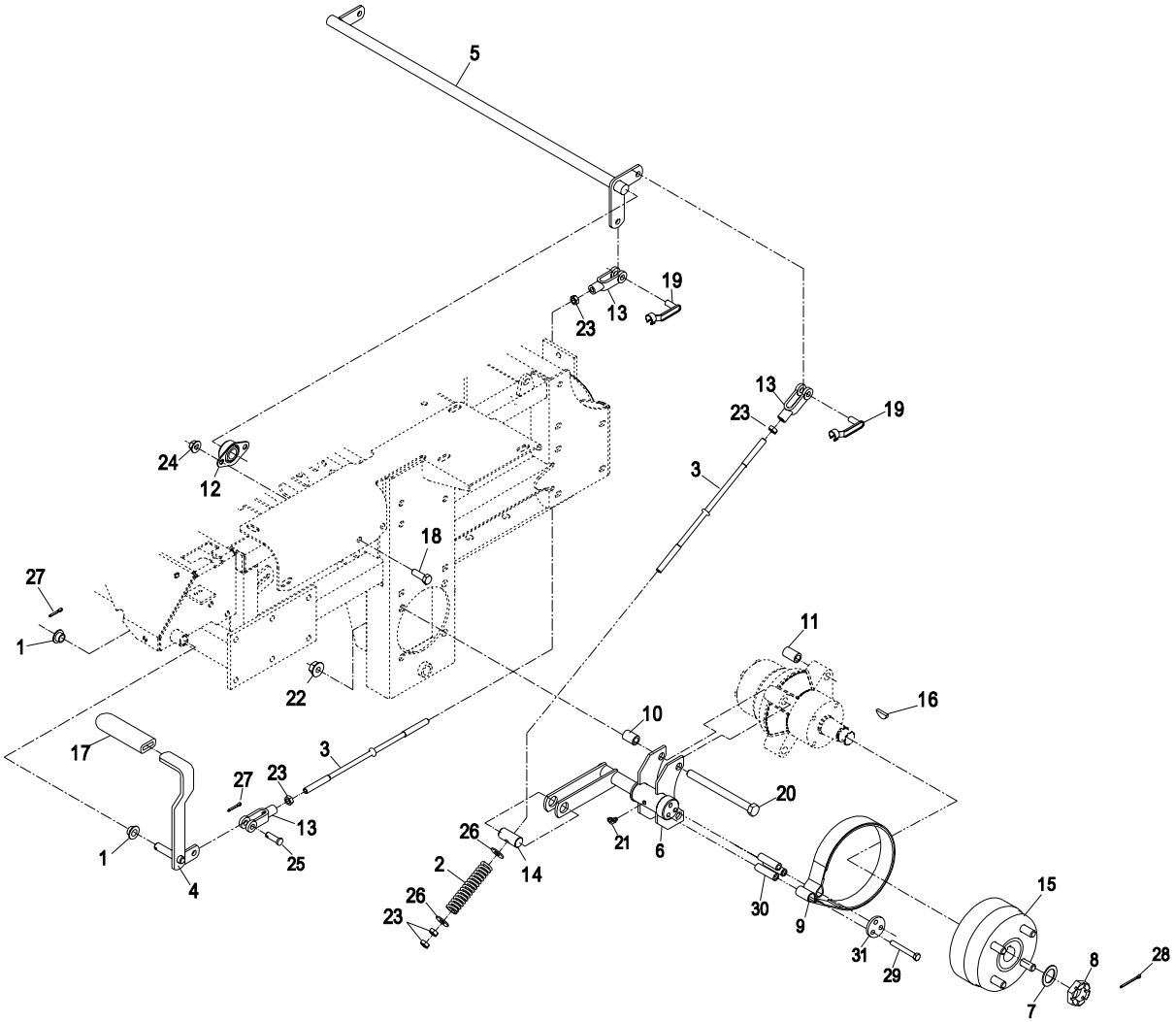

Item	Part No.	Description	Qty.
1	1-513140	Bushing	2
2	1-633454	Spring, Brake Rod	2
3	1-633477	Rod, Brake	3
4	1-634500	Lever (1-632489-03)W/Grip	1
5	1-632217-03	Shaft, Brake	1
6	103-0352-03	Bracket, Brake (52” & 60”)	2
	103-0354-03	Bracket, Brake (72”)	2
7	1-523157	Washer, Spacer	2
8	1-809036	Nut, Slotted 1.00-20	2
9	103-9761	Band, Brake	2
10	1-633380	Spacer (Short) (52” & 60”)	4
	109-5011	Spacer (Short) (72”)	4
11	1-633382	Spacer (Long) (52” & 60”)	4
	109-5012	Spacer (Long) (72”)	4
12	1-633102	Bearing, Flange	2
13	1-633131	Yoke	4
14	1-633144	Pin, Trunion	2
15	103-0590	Hub & Drum W/Studs, Wheel	2
✳	1-633926	Studs, Wheel	8

Item	Part No.	Description	Qty.
16	3257-42	Key, Woodruff 5/16 x 1	2
17	1-633268	Grip, Brake Lever	1
18	323-4	Screw, 3/8-16 x 3/4	4
19	103-2399	Pin, Clevis Spring 3/8	3
20	325-17	Screw, 1/2-13 x 4 (52” & 60”)	8
	325-20	Screw, 1/2-13 x 6 (72”)	8
21	1-603991	Zerk, 1/4-28 Straight	2
22	32128-49	Nut, Whizlock 1/2-13 UNC-2B	8
23	3219-3	Nut, 3/8-24	8
24	3290-357	Nut, Whizlock 3/8-16	4
25	1-808285	Pin, Clevis 3/8 x 1 1/4	1
26	3256-4	Washer, 3/8 Std	4
27	3272-10	Pin, Cotter 1/8 x 3/4	2
28	1-806800	Pin, Cotter 9/64 x 1 1/2	2
29	322-9	Screw, 5/16-18 x 1 3/4	6
30	103-0384	Spacer	6
31	103-0374	Retainer, Brake Band	2

Exmark black touch up spray paint - gloss black.

✳ Not Illustrated.

MOTION CONTROL GROUP

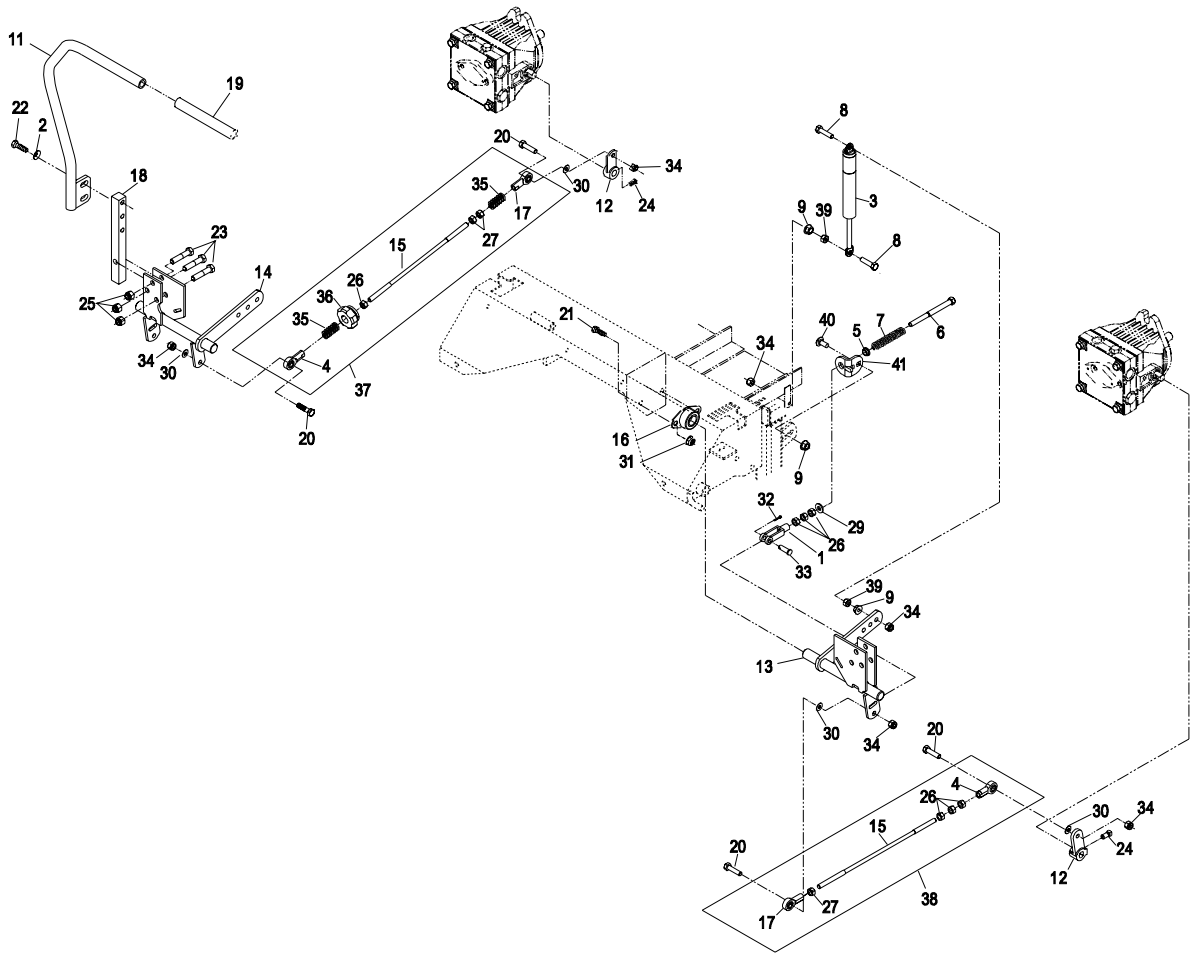

Item	Part No.	Description	Qty.
1	1-303105	Yoke	2
2	98-5975	Washer, Disc Spring 3/8	4
3	109-2339	Damper	2
4	1-543017	Ball Joint (RH)	2
5	109-3769	Bushing, Nylon (Reverse Ind)	2
6	1-603737	Bolt, (Neutral Return)	2
7	1-603807	Spring, (Neutral Return)	2
8	1-403180	Screw, 5/16-18x1 3/8 Sp	4
9	32128-20	Nut, Whizlock 5/16-18	6
10✳	103-3457	Handle (103-3326-03) W/Grip (LH)	1
11	103-3458	Handle (103-3327-03) W/Grip (RH)	1
12	1-632208	Arm, Pump Control	2
13	109-3902	Bracket, Motion Control (LH)	1
14	109-3901	Bracket, Motion Control (RH)	1
15	103-3064	Link, Tracking Rod	2
16	1-633102	Bearing, Flanged	4
17	1-633152	Ball Joint (LH)	2
18	103-0407	Arm, Control Shaft	2
19	103-3456	Grip, Motion Control Handle	2
20	322-6	Screw, 5/16-18 x 1 1/4	4
21	323-4	Screw, 3/8-16 x 3/4	8

Item	Part No.	Description	Qty.
22	323-7	Screw, 3/8-16 x 1 1/4	4
23	323-9	Screw, 3/8-16 x 1 3/4	6
24✚	1-803022	Set Screw, 5/16 x 5/8	2
25	3296-39	Nut, Nyloc 3/8-16	6
26	3219-2	Nut, 5/16-24	8
27	1-804524	Nut, 5/16-24 (LH)	3
28	3220-2	Nut, Jam 5/16-24	2
29	3256-2	Washer, 1/4	2
30	3256-3	Washer, 5/16 Std	4
31	3290-357	Nut, Whizlock 3/8-16	8
32	3272-5	Pin, Cotter 3/32 x 1/2	2
33	1-808280	Pin, Clevis 5/16 x 1	2
34	3296-29	Nut, Nyloc 5/16-18	4
35	1-323245	Spring, Compression	2
36	103-3060	Knob, Tracking	1
37	103-4330	Asm, Tracking Rod	1
38	103-4331	Asm, Tracking Rod	1
39	3217-6	Nut, Hex 5/16-18	4
40	3230-23	Bolt, Carriage 5/16-18 x 3/4, short neck	2
41	109-3908	Tab, Adjustment	2

Exmark black touch up spray paint - gloss black.

✳ Not Illustrated.

✚ Use Pro-lock, Nut type (Part No. 1-840022), .5ml tube on setscrews.

ENGINE DECK GROUP

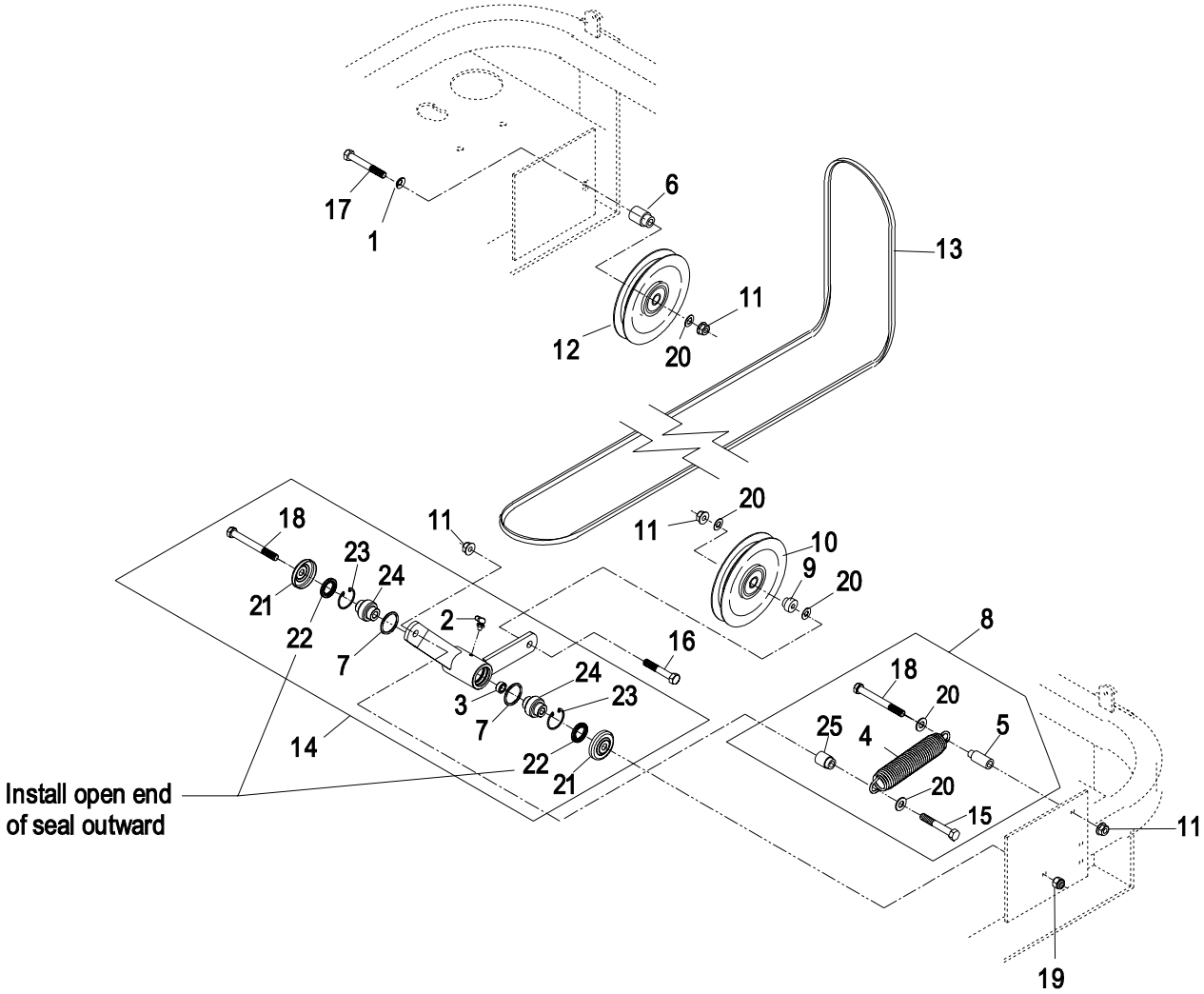

Item	Part No.	Description	Qty.
1	98-5975	Washer, Spring Disc 3/8	1
2	302-40	Zerk, 1/4-20 (90º)	1
3	103-5677	Spacer	1
4	103-8599	Spring	1
5	109-3141	Spacer, Spring Mount	1
6	103-2627	Bushing, Idler	1
7	106-7159	O-ring	2
8■	109-3766	Kit, Mule Idler Spring	1
9	1-603496	Bushing, Idler	1
10	1-603805	Pulley, Idler	1
11	3290-357	Nut, Whizlock 3/8-16	4
12	1-633166	Pulley, Idler	1
13	103-4014	Belt, Mule Drive	1

Item	Part No.	Description	Qty.
14✖	103-5695	Kit, Idler Arm (103-4593-03) W/Brgs	1
15	323-10	Screw, 3/8-16 x 2	1
16	323-9	Screw, 3/8-16 x 1 3/4	1
17	323-13	Screw, 3/8-16 x 2 3/4	1
18	1-800805	Screw, 3/8-16 x 3 1/2 Gr8	2
19	3296-39	Nut, Nyloc 3/8	1
20	3256-24	Washer, 3/8 SAE	5
21	103-2916	Guard, Top	2
22	103-3506	Seal, Single Lip	2
23	32120-10	Ring, Retaining	2
24	103-3504	Bearing, Spherical	2
25	1-633456	Bushing, Idler	1

Exmark black touch up spray paint - gloss black.

✖ Kit also includes item #19.

■ Kit includes items shown and (2) whizlock nuts item #11.

ENGINE DECK GROUP (cont.)

Item	Part No.	Description	Qty.
1	1-643315	Baffle, Engine Cooler (KOH)	1
2	52-4780	Rod, Belt	1
3	109-2365	Bumper, Rubber	2
4	3256-4	Washer, 3/8 Std	1
5	323-6	Screw, HH 3/8-16 x 1	1
6	1-603610	Washer, Spring Disc	2
7	1-633615-03	Guard, Rear Engine	1
8	109-2987✚	Asm, Oil Drain Tube W/Plug (KOH)	1
9	103-3246	Clutch Kit (KOH)	1
	103-3012	Kit, Brake Pole Module	1
	103-6589	Clutch (KAW)	1
10	1-633179	Spacer	1
11	1-644276	Asm, Shield W/Decals (KOH)	1
	103-3341	Asm, Shield W/Decals (KAW)	1
12	103-1308	Shield, Engine	1
13	323-9	Screw, HH 3/8-16 x 1 3/4	4
14	1-634796	Shield (LH) – Subassy (KOH)	1
	103-0241	Shield (LH) – Subassy (KAW)	1
15	1-633301	Shield, Heat	2
16	321-4	Screw, HH 1/4-20x 3/4	1
17	1-643313-03	Shield, Muffler (Kohler)	1
18	1-644316	Shield (RH) – Subassy (KOH)	1
✧	103-0242	Shield (RH) – Subassy (KAW)	1
19	1-523285	Clip, Shield	2
20	103-3535	Kit, Cable Heat Shield (KOH)	1
21	109-1012	Plug	1
22	321-4	Screw, HH 1/4-20 x 3/4	10
23	1-653291	Gasket (Kohler)	2
24	323-6	Screw, HH 3/8-16 x 1	6
25▲	3212-10	Screw, HH 7/16-20 x 2 1/2 (KOH)	1
	3212-6	Screw, HH 7/16-20 x 1 1/2 (KAW)	1

Item	Part No.	Description	Qty.
26	1-803035	Rivet, 3/16 x 1/4 (KOH)	11
	1-803035	Rivet, 3/16 x 1/4 (KAW)	9
27	3296-42	Nut, Nyloc 1/4-20	4
28	103-7454-03	Bracket, Guard Top	2
29	3256-2	Washer, 1/4 Std	4
30	98-5975	Washer, Spring Disc 3/8	5
31	33014-00	Nut, Hex M8 1.25	4
32	3290-357	Nut, Whizlock 3/8-16	14
33	32128-33	Nut, Whizlock 1/4-20	9
34	1-633396	Clip, Loom .56	1
35	1-809108	Screw, Self Tapping 5/16-18 x1.75 (KOH)	2
36	1-805005	Washer, Lock 5/16 Hvy	4
37	1-323236	Spacer (Kohler)	2
38	3253-6	Washer, Lock 7/16	2
39	324-2	Screw, HH 7/16-14x.75 G5	2
40	9266934	Screw, HH 5/16-18x.5 (KOH)	2
41	3256-63	Washer, 3/16 Std	6
42✖	103-7480	Kit, Muffler Kohler	1
43	109-4490	Asm, Oil Drain Tube W/Plug (KAW)	1
44	103-0152	Keeper, Clutch (KAW)	1
45	322-2	Screw, HH 5/16-18 x 5/8	4
46	3256-23	Washer, 5/16 SAE	4
47	33104-025	Screw HH M8-1.25 x 25mm	2
48	42-9850	Washer, Lock M8	2
49	33004-00	Nut, Hex M8-1.25	2
50	32128-20	Nut, Whizlock 5/16-18	4
51	112-8347-03	Bracket, Muffler Mount (KAW)	1
52	112-8346-03	Guard, Muffler (KAW)	1
53	112-8348-03	Bracket Muffler Support (KAW)	1

Exmark black touch up spray paint - gloss black.

✚ Use a Teflon Pipe Sealant or equivalent on threads.

▲ Use Pro-Lock, Nut Type (P/N 1-840022, .5ml tube) on clutch bolt.

✖ Includes items #20, & #23.

✧ Excludes item 1

Kohler Replacement Parts List

(Refer to Engine Owner's Manual)

Description	Kohler Part
Engine Oil Filter	5205002
Engine Air Filter	2508301
Safety Filter	2508304

Kawasaki Replacement Parts List

(Refer to Engine Owner's Manual)

Description	Kawasaki Part
Engine Oil Filter	49065-2078
Engine Air Filter	11013-7020
Safety Filter	11013-7019

ENGINE DECK GROUP (cont.)

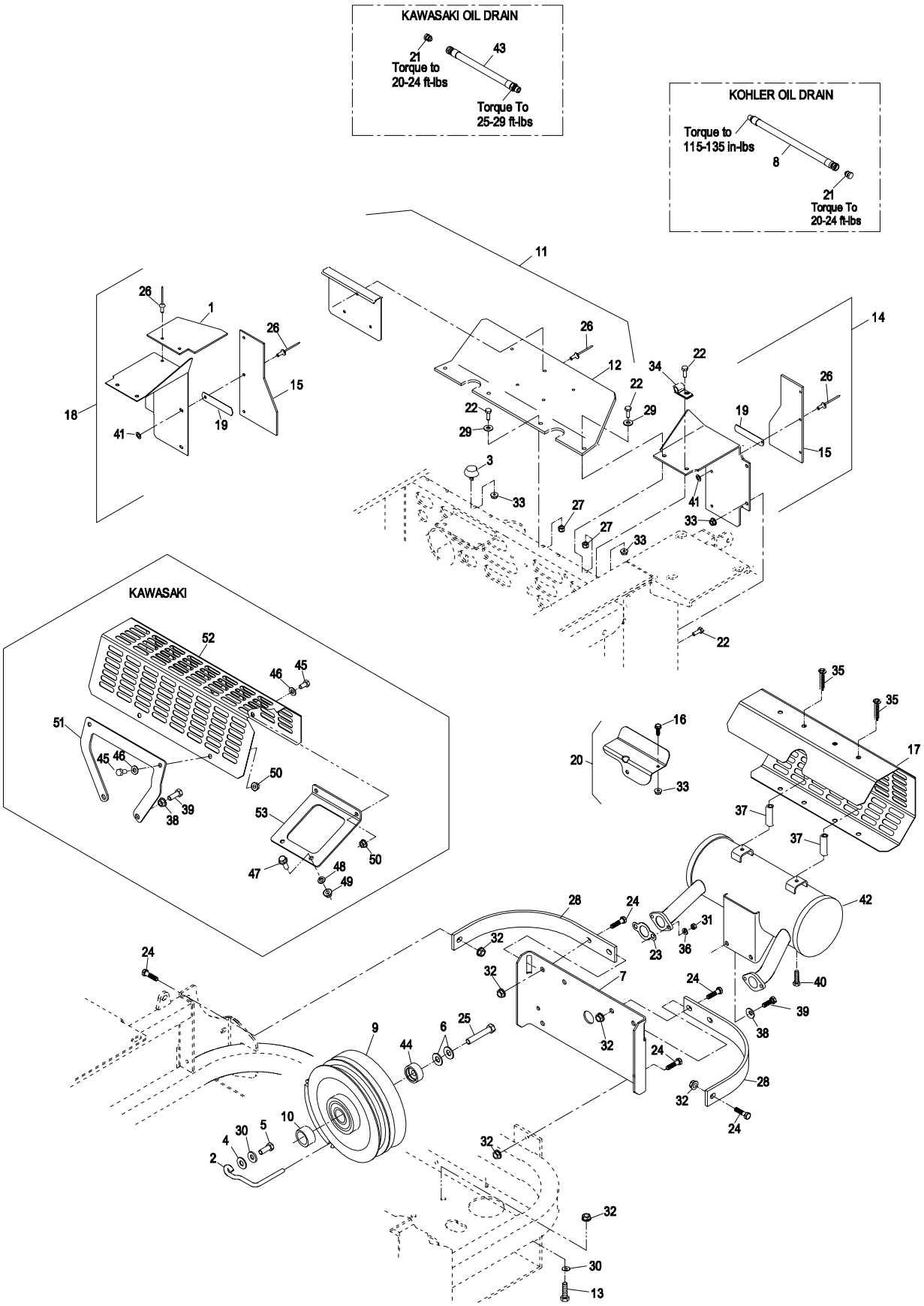

HYDRAULIC GROUP

Item	Part No.	Description	Qty.
1	103-1947	Asm, Reservoir W/Decal	1
2	103-7615	Cap, Hydraulic Reservoir	1
3	103-1949	Gasket, Reservoir Cap	1
4	104-7836	Head, Filter	1
5	109-4180	Element, Hydraulic Oil Filter	1
▲	1-523541	Element, Hydraulic Filter (Winter)	1
6	103-1988	Clamp, Hose (11/16)	4
7	103-1716	Clamp, Hose (17/32)	3
8	103-1826	Asm, Hose Hydraulic	1
9	103-1827	Asm, Hose Hydraulic	1
10	103-1808	Hose, Hydraulic	1
11	103-1806	Asm, Case Drain Hose	1
12	103-1807	Elbow,45°	1
	1-603921	Boss O-Ring	1
13	103-1828	Adapter, Run Tee	1
	1-603921	Boss O-Ring	1
14	103-1801	Adapter, Straight	1
	1-603921	Boss O-Ring	1
15	103-1912	Adapter, Straight	1
	1-603921	Boss O-Ring	1
16	103-1799	Elbow,90°	2
	1-603921	Boss O-Ring	1
17	321-3	Screw,1/4-20 x 5/8	2
18	1-805004	Lockwasher, 1/4	2
19	103-1802	Elbow, 90°	2
	1-603921	Boss O-Ring	1
20	103-7262	Pump, Hydraulic	2
	103-7441	Kit, Input Bearing	1
	94-6922	Kit, Thrust Bearing	1
	103-7443	Kit, Cylinder Block	1
	105-6184	Kit, Overhaul Seal	1
	103-2741	Kit, Shock Valve 10A/10L	1
21	1-603990	Connector, Straight	4
	1-603920	O-Ring (SAE #8)	1
	1-603992	O-Ring (37° Flare #8)	1
22	103-5333	Motor, Wheel Drive	2
23	103-3733	Hose, Upper LH (52” & 60”)	1
	103-2962	Hose, Upper LH (72”)	1

Item	Part No.	Description	Qty.
24	103-3736	Hose, Upper RH (52” & 60”)	1
	109-2964	Hose, Upper RH (72”)	1
25	103-3735	Hose, Lower LH (52” & 60”)	1
	109-2963	Hose, Lower LH (72”)	1
26	103-3737	Hose, Lower RH (52” & 60”)	1
	109-2961	Hose, Lower RH (72”)	1
27	103-6907	Sheave, Pump	2
28✚	1-803022	Setscrew, Sq Hd 5/16-18 x 5/8	2
29✚	30-1710	Setscrew, Sq Hd Cup 5/16-18 x 1	2
30✚	1-803050	Setscrew, Sq Hd Cup 5/16-18 x 3/4	2
31	5-1077	Key, Machine 3/16 SQ x 1	2
32	1-603991	Adapter, Straight	4
	1-603919	Boss O-Ring	1
	1-603992	Flare O-Ring	1
33	109-4076	Pulley, Idler W/Bushing	1
34✖	103-5694	Kit, Idler Arm (103-4595-03) W/Bearings	1
35	323-9	Screw, HH 3/8-16 x 1 3/4	1
36	3256-3	Washer, Flat Std 5/16	1
37	3290-357	Nut, Whizlock 3/8-16	8
38	103-5677	Spacer	1
39	32128-33	Nut, Whizlock 1/4-20	2
40	1-633567	Sheave, Engine	1
41	103-6906	Belt, Pump Drive	1
42	323-8	Screw,3/8-16 x 1 1/2	1
43	1-800805	Screw,3/8-16 x 3 1/2 Gr8	1
44	323-7	Screw,3/8-16 x 1 1/4	4
45	106-7159	O-ring	2
46	13-2840	Key, 1/4 x 1/4 x 1 1/4	1
47	302-40	Zerk,90° 1/4-28	1
48	103-3504	Bearing, Spherical	2
49	103-3330	Spring, Extension	1
50	321-6	Screw, HH 1/4-20 x 1	2
51	3256-22	Washer, SAE 1/4	2
52	103-2916	Guard, Top	2
53	103-3506	Seal, Single Lip	2
54	32120-10	Ring, Retaining	2

Exmark black touch up spray paint - gloss black.

✚ Use Pro-Lock, Nut Type (P/N 1-840022, 5 ml tube) on setscrews.

▲ Use only for operation below 32°F (0°C).

HYDRAULIC GROUP

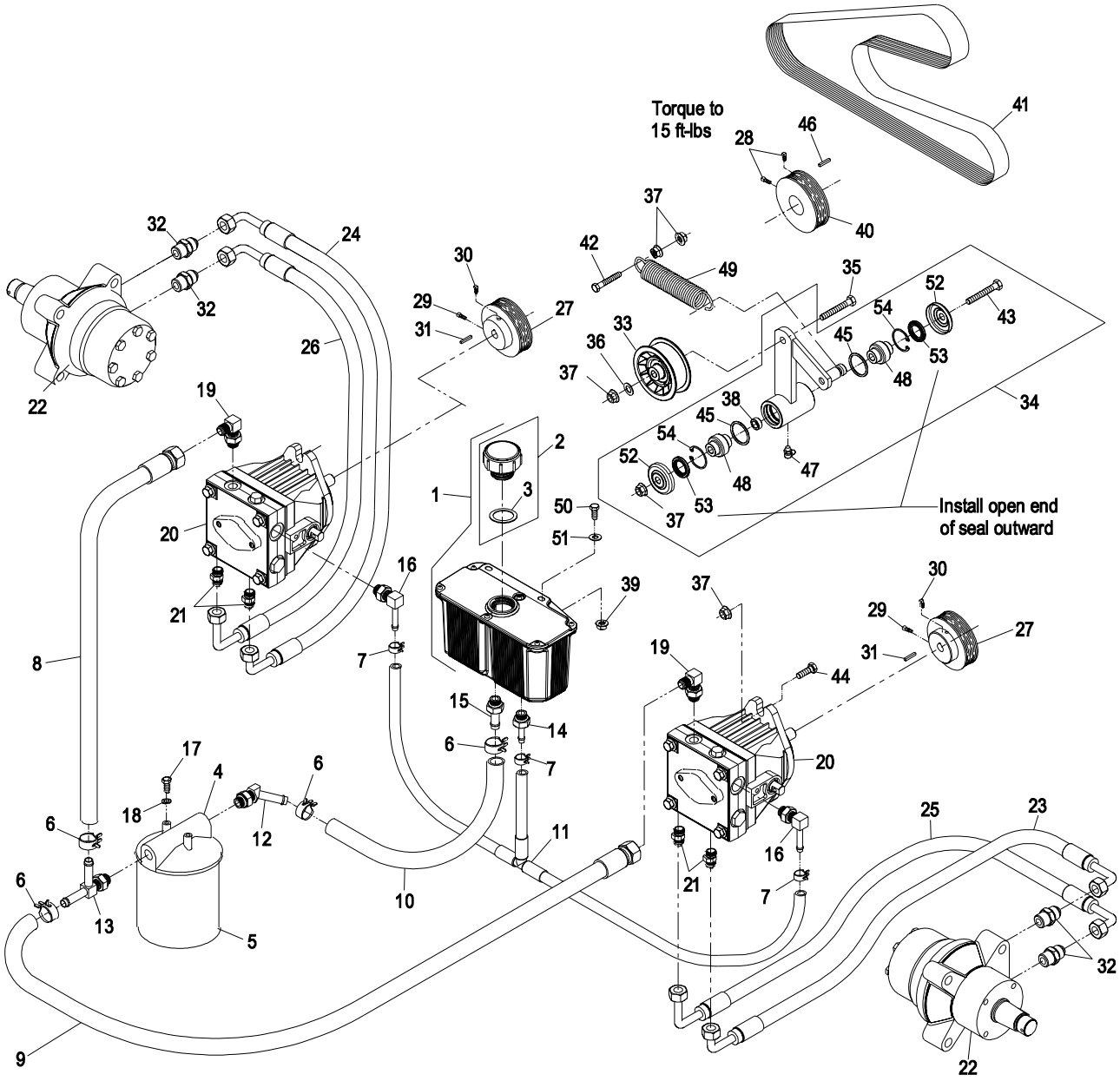

DECAL GROUP

Item	Part No.	Description	Qty.
1	109-0736	Decal, Console	1
2	107-2112	Decal, Warning Slope	1
3	103-6319	Decal, Check Service	1
4	1-643222	Decal, Belt Routing	1
5	1-633706	Decal, Deck Height	1
6	1-643339	Decal, Pump Belt Rtg	1
7	103-3270	Decal, 3750 RPM	1
8	103-3999	Decal, Exmark Logo (Console)	1
9	1-513742	Decal, No Step	2
10	1-303508	Decal, Discharge Warning	1
11	1-513748	Decal, Guard	1
12	98-5954	Decal, Missing Cover	2
13	109-3148	Decal, Bolt Torque	1
14	109-0737	Decal, Console	1

Item	Part No.	Description	Qty.
15	103-3113	Decal, Lazer Model	1
16	1-633313	Decal, Warning	1
17	1-633462	Decal, Important	1
18	103-1146	Decal, Ultracut 60	1
19	103-5881	Decal, Rotating Devices	1
20	103-9256	Decal, Console Top	1
21	1-523552	Decal, Hyd Tank/Hot Surface	1
22	107-2102	Decal, Rops Folding	1
23	1-633922	Decal, Anti-Scalp	1
24	103-2882	Decal, Exmark Logo	1
25	1-403005	Decal, Danger	2
26	103-1145	Decal, Ultracut 52	1
27	103-1147	Decal, Ultracut 72	1
	103-5472	Decal Kit	

DECAL GROUP

1

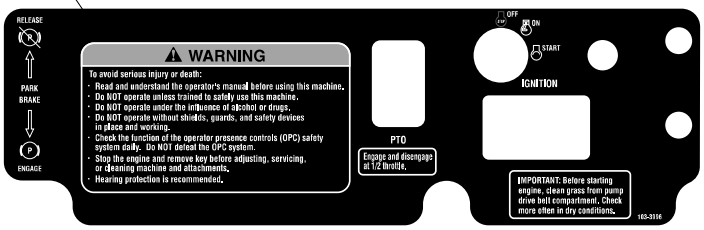

2

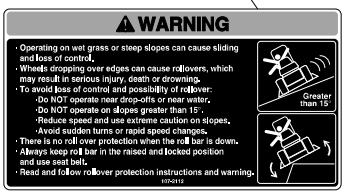

3

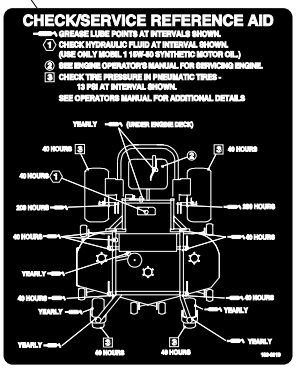

4

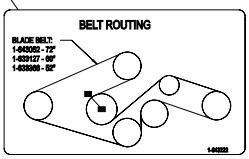

5

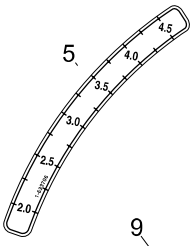

6

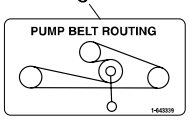

7

Engine RPM
3750 ± 50 (no load)

8

9

NO STEP

10

WARNING
DO NOT OPERATE WITHOUT DISCHARGE DEFLECTOR, ENTIRE GRASS COLLECTION SYSTEM, OR MULCH KIT IN PLACE. DO NOT REMOVE GRASS CATCHER UNTIL BLADES HAVE STOPPED.

11

CAUTION
DO NOT OPERATE WITHOUT GUARD IN PLACE.

12

DANGER
COVER IS MISSING. DO NOT OPERATE THIS UNIT WHEN COVER IS NOT IN PLACE.

13

Lubricate Blade Bolt threads with copper based antiseize or grease and torque to 55-60 ft-lbs (75-81 N·m)

14

15

16

WARNING
DISENGAGE BLADE CLUTCH, SHUT OFF ENGINE AND REMOVE KEY BEFORE MAKING ADJUSTMENTS, SERVICING OR CLEANING DECK.

17

IMPORTANT:
BEFORE STARTING ENGINE, CLEAN GRASS FROM PUMP DRIVE BELT COMPARTMENT. CHECK MORE OFTEN IN DRY CONDITIONS.

18

19

WARNING
ROTATING MECHANICAL DEVICES CAN CAUSE SERIOUS INJURY!
· DO NOT operate without guards in place
· Stop engine before opening cover

20

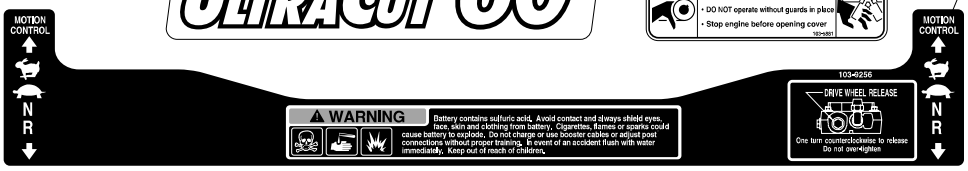

21

HYDRAULIC OIL - USE ONLY
MOBIL 1 SAE 15W-50
SYNTHETIC ENGINE OIL
FILL TO TOP OF BAFFLE
CAUTION
HOT SURFACE

22

23

ANTI-SCALP ROLLER ADJUSTMENT
FOR NORMAL OPERATING CONDITIONS, PLACE ROLLERS IN POSITIONS SHOWN FOR 3/4" (19 mm) GROUND CLEARANCE.

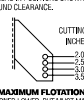

FOR MAXIMUM FLOTATION, ROLLERS MAY BE POSITIONED LOWER, BUT MUST MAINTAIN A MINIMUM OF 1/4" (6.4 mm) GROUND CLEARANCE. NEVER POSITION THE ROLLERS TO SUPPORT THE MOWER DECK.

24

25

26

27

KOHLER ELECTRICAL GROUP

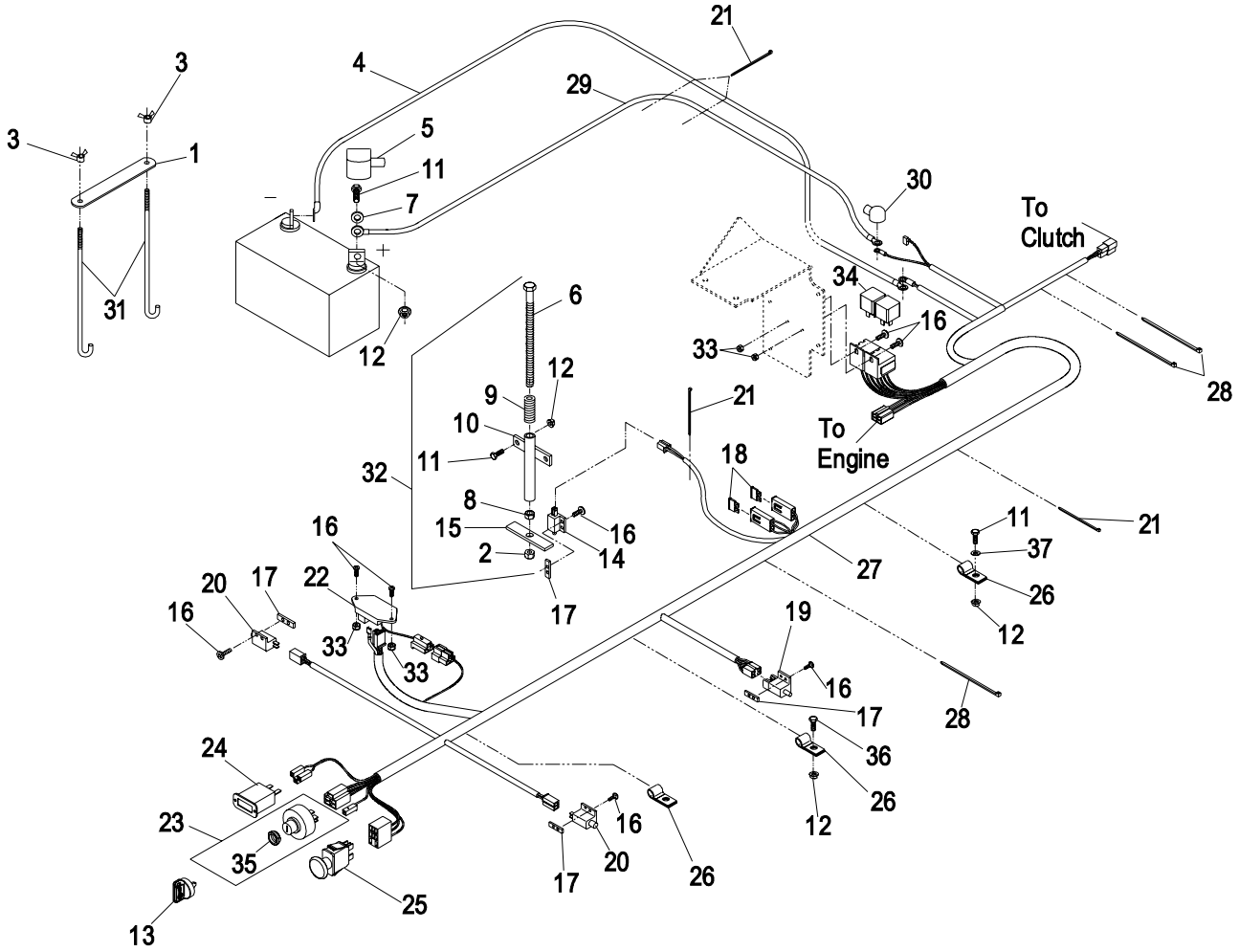

Item	Part No.	Description	Qty.
1	107-9277-03	Hold Down, Battery	1
2	3296-29	Nut, 5/16-18 Nyloc	1
3	1-543792	Wingnut, Nyloc	2
4	1-633307	Cable, Battery (-) 40”	1
5	1-543391	Insulator, Battery	1
6	1-800282	Screw, 5/16-18 x 7	1
7	3256-2	Washer, 1/4 Flat	2
8	3217-6	Nut, Hex 5/16-18	1
9	1-523415	Spring, Seat Switch	1
10	1-522424-03	Wldmt, Spring Mount	1
11	321-4	Screw, 1/4-20 x 3/4	5
12	32128-33	Nut, 1/4-20 Whizlock	6
13	103-2106	Key, Exmark Logo	1
	1-603511	Key, Ignition	1
14	1-513152	Switch, Seat N.C.	1
15	1-513180	Actuator, Seat Switch	1
16	3290-500	Screw, #10-24 x 5/8	12
17	1-633181	Plate, Tapped	4
18	1-816001	Fuse-20 Amp	2

Item	Part No.	Description	Qty.
19	1-633111	Switch, Brake N.O./N.C.	1
20	1-513051	Switch, Drive Lever N.O.	2
21	1-303287	Plastic Tie (Small)	5
22	103-5218	Module, Seat Delay	1
23	109-4736	Asm, Switch W/Nut	1
24	1-513374	Meter, Engine Hours	1
25	103-5221	Switch, PTO	1
26	1-633396	Clip, Loom .69	3
27▲	109-0480	Harness, Wiring	1
28	1-303335	Plastic Tie (Large)	3
29	1-523281	Cable, Battery (+) 30”	1
30	1-543393	Insulator, Solenoid (+)	1
31	1-633651	Bolt, Battery Hold Down	2
32	103-5652	Asm, Seat Switch Actuator	1
33	3296-2	Nut, #10-24 Hex Nyloc	4
34	1-643275	Relay, 12V	2
35	103-0498	Nut, Ignition	1
36	321-2	Screw, 1/4-20 x 1/2	1
37	3256-22	Washer, 1/4 SAE	1

▲ Use dielectric grease on all wiring harness connectors.

KAWASAKI ELECTRICAL GROUP

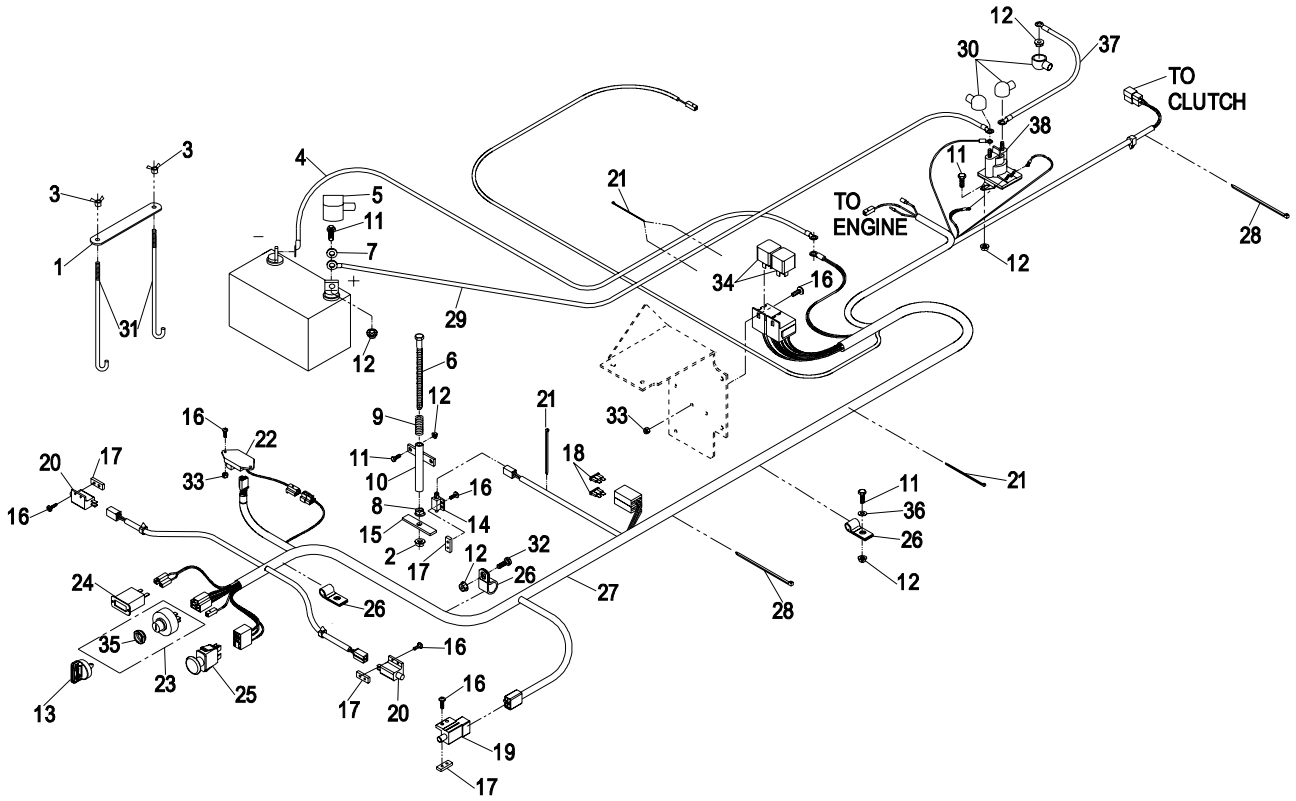

Item	Part No.	Description	Qty.
1	107-9277-03	Hold Down, Battery	1
2	3296-29	Nut, 5/16-18 Nyloc	1
3	1-543792	Wingnut, Nyloc	2
4	1-633307	Cable, Battery (-) 40”	1
5	1-543391	Insulator, Battery	1
6	1-800282	Screw, 5/16-18 x 7	1
7	3256-2	Washer, 1/4 Flat	2
8	3217-6	Nut, Hex 5/16-18	1
9	1-523415	Spring, Seat Switch	1
10	1-522424-03	Wldmt, Spring Mount	1
11	321-4	Screw, 1/4-20 x 3/4	7
12	32128-33	Nut, 1/4-20 Whizlock	9
13	103-2106	Key, Exmark Logo	1
	1-603511	Key, Ignition	1
14	1-513152	Switch, Seat N.C.	1
15	1-513180	Actuator, Seat Switch	1
16	3290-500	Screw, #10-24 x 5/8	12
17	1-633181	Plate, Tapped	4
18	1-816001	Fuse-20 Amp	2
19	1-633111	Switch, Brake N.O./N.C.	1

Item	Part No.	Description	Qty.
20	1-513051	Switch, Drive Lever N.O.	2
21	1-303287	Plastic Tie (Small)	5
22	103-5218	Module, Seat Delay	1
23	109-4736	Asm, Switch W/Nut	1
24	1-513374	Meter, Engine Hours	1
25	103-5221	Switch, PTO	1
26	1-633396	Clip, Loom .69	3
27▲	109-5804	Harness, Wiring	1
28	1-303335	Plastic Tie (Large)	2
29	1-523281	Cable, Battery (+) 30”	1
30	1-543393	Insulator, Solenoid (+)	3
31	1-633651	Bolt, Battery Hold Down	2
32	321-2	Screw, 1/4-20 x 1/2	1
33	3296-2	Nut, #10-24 Hex Nyloc	4
34	1-643275	Relay, 12V	2
35	103-0498	Nut, Ignition	1
36	3256-22	Washer, 1/4 SAE	1
37	1-633306	Wire, Starter Solenoid	1
38	1-513075	Switch, 12V Solenoid	1

▲ Use dielectric grease on all wiring harness connectors.

KOHLER ELECTRICAL DIAGRAM

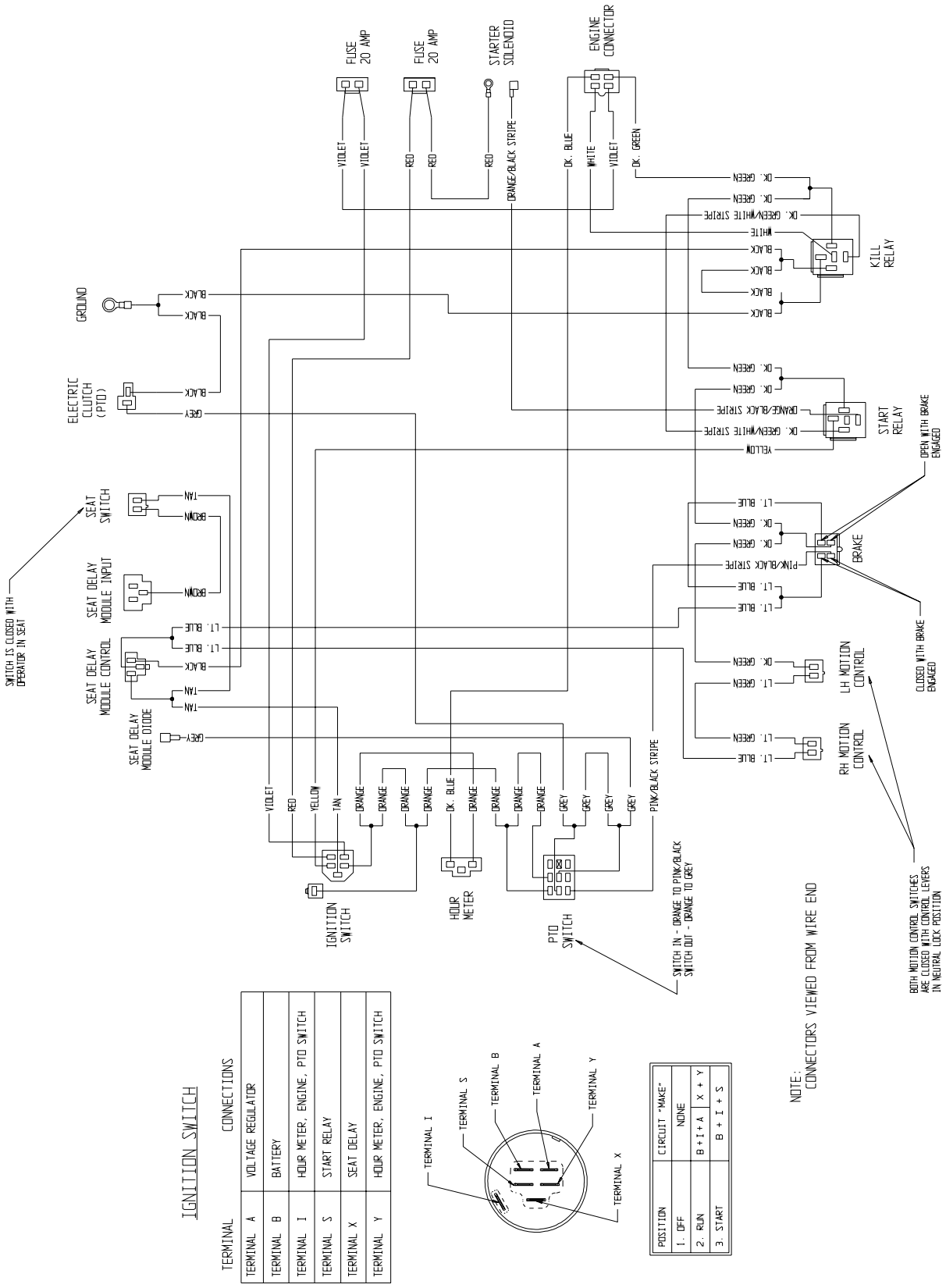

KAWASAKI ELECTRICAL DIAGRAM

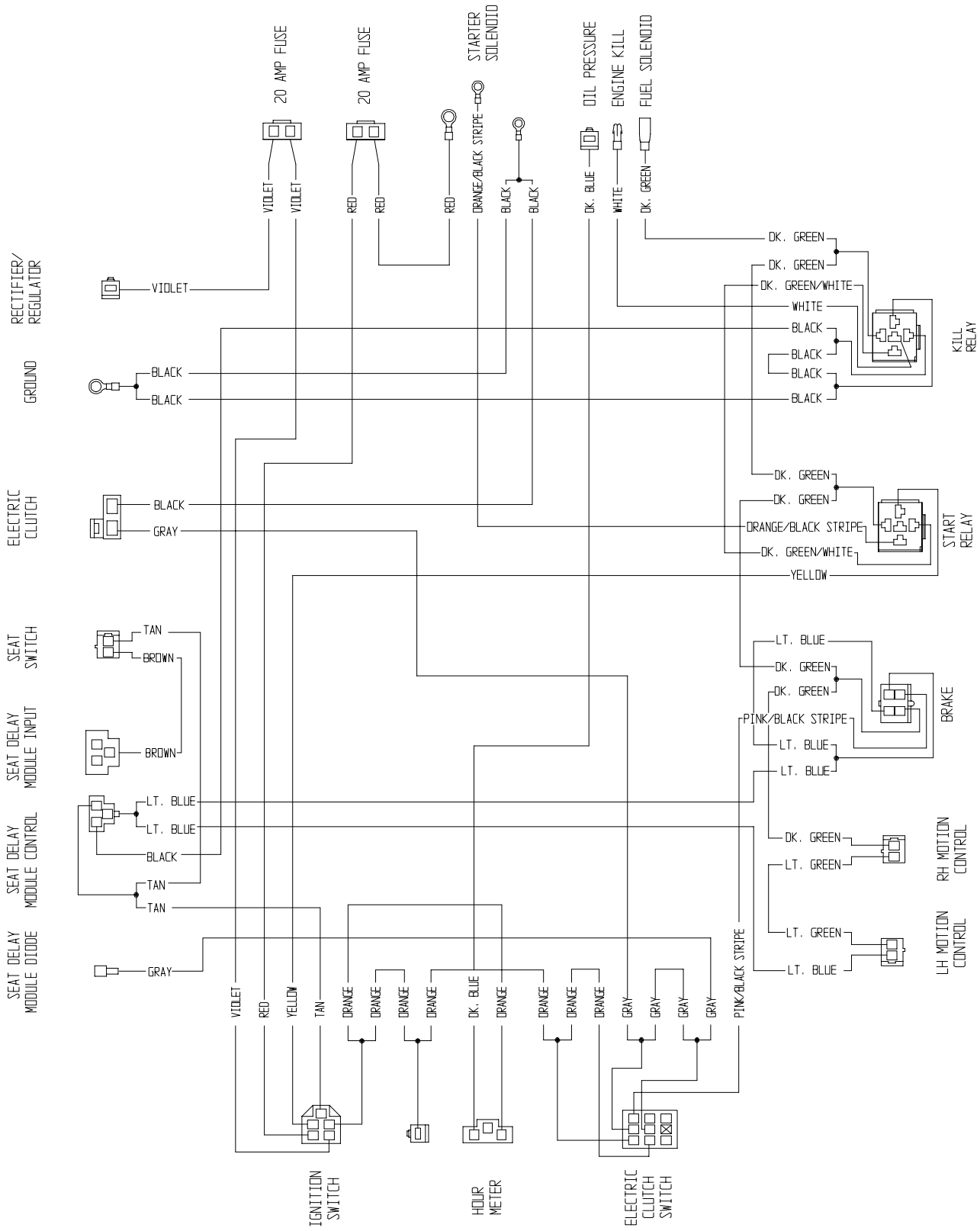

KOHLER LOGIC SCHEMATIC

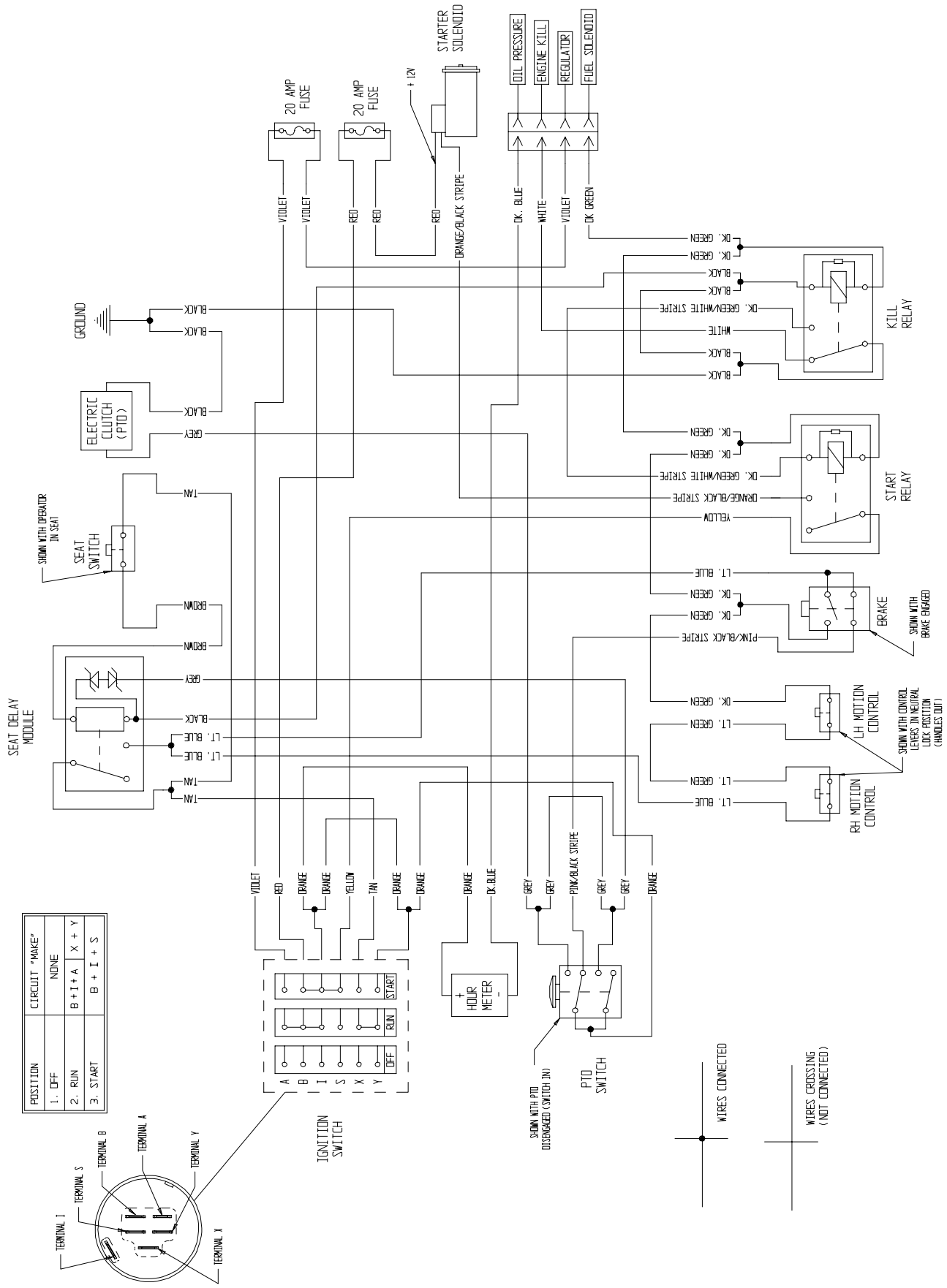

KAWASAKI LOGIC SCHEMATIC

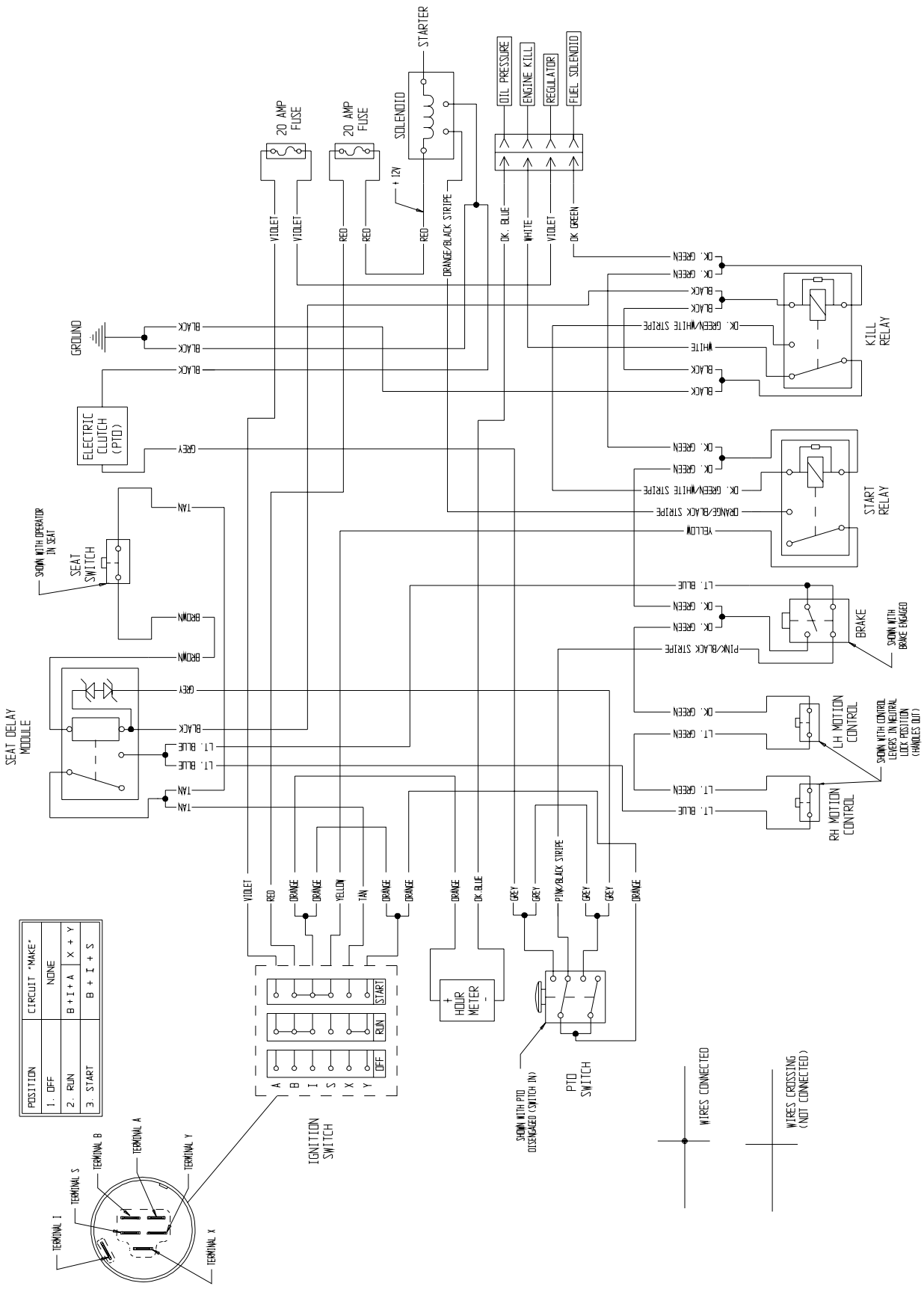

NOTES

SERVICE RECORD

Date	Description of Work Done	Service Done By

SEE EXMARK'S COMPLETE LINE OF ACCESSORIES

RIDING ACCESSORIES

CUSTOM RIDE SEAT SUSPENSION SYSTEM
DECK LIFT ASSIST KIT
HITCH KIT
LIGHT KIT
MICRO-MULCH SYSTEM
ROLL OVER PROTECTION SYSTEM (ROPS)
SNOW BLADE
SUN SHADE
TRASH CONTAINER
TURF STRIPER
ULTRA VAC COLLECTION SYSTEM
ULTRA VAC QUICK DISPOSAL SYSTEM

WALK BEHIND ACCESSORIES

GRASS CATCHER
MICRO-MULCH SYSTEM
STEERABLE SULKY
SULKY HITCH KIT
TURF STRIPER
STANDON

Check us out on the Web:
www.exmark.com

© 1997-2007 EXMARK MFG. CO. INC.
INDUSTRIAL PARK BOX 808
BEATRICE, NE 68310

ALL RIGHTS RESERVED

PART NO. 109-6506 Rev. B
(402) 223-6300
FAX (402) 223-5489

PRINTED IN U.S.A.

eXmark® MFG. CO.