# LAZER Z® MODELS

# Parts Manual

**For Serial Nos.**
**790,000 & Higher**
Part No. 4500-484 Rev. B

EXMARK PARTS PLUS

PARTS OVERNIGHT OR FREE*

If your Exmark dealer does not have the Exmark part in stock, Exmark will get the parts to the dealer the next business day or the part will be FREE Guaranteed!! (Some restrictions apply. See your participating Exmark Dealer for details.)

# WARNING

**READ OPERATOR'S MANUAL BEFORE OPERATING OR SERVICING EXMARK EQUIPMENT.**

## TABLE OF CONTENTS


| Description | Page |
|---|---|
| Brake Handle Assembly | 22 |
| Caster Wheel Assembly | 15-16 |
| Controls Group | 19 |
| Cutter Housing Assembly | 12 |
| Decal Group | 34 |
| Deck Group | 3-10 |
| Deck Support Group | 17 |
| Deck Idler Assembly | 11 |
| Electrical Diagram | 35 |
| Electrical Group | 33 |
| Electrical Logic Schematic | 36 |
| Engine Group | 27-30 |
| Fuel Group | 25 |
| Fuel Tank Assembly | 26 |
| Height of Cut Assembly | 18 |
| Hydraulic Group | 31 |
| Mainframe Group | 13 |
| Motion Control Group | 20 |
| Park Brake Group | 21 |
| Pump Idler Assembly | 32 |
| ROPS Assembly | 14 |
| Seat Group | 23 |
| Seat W/Tracks Assembly | 24 |

# 48” DECK GROUP

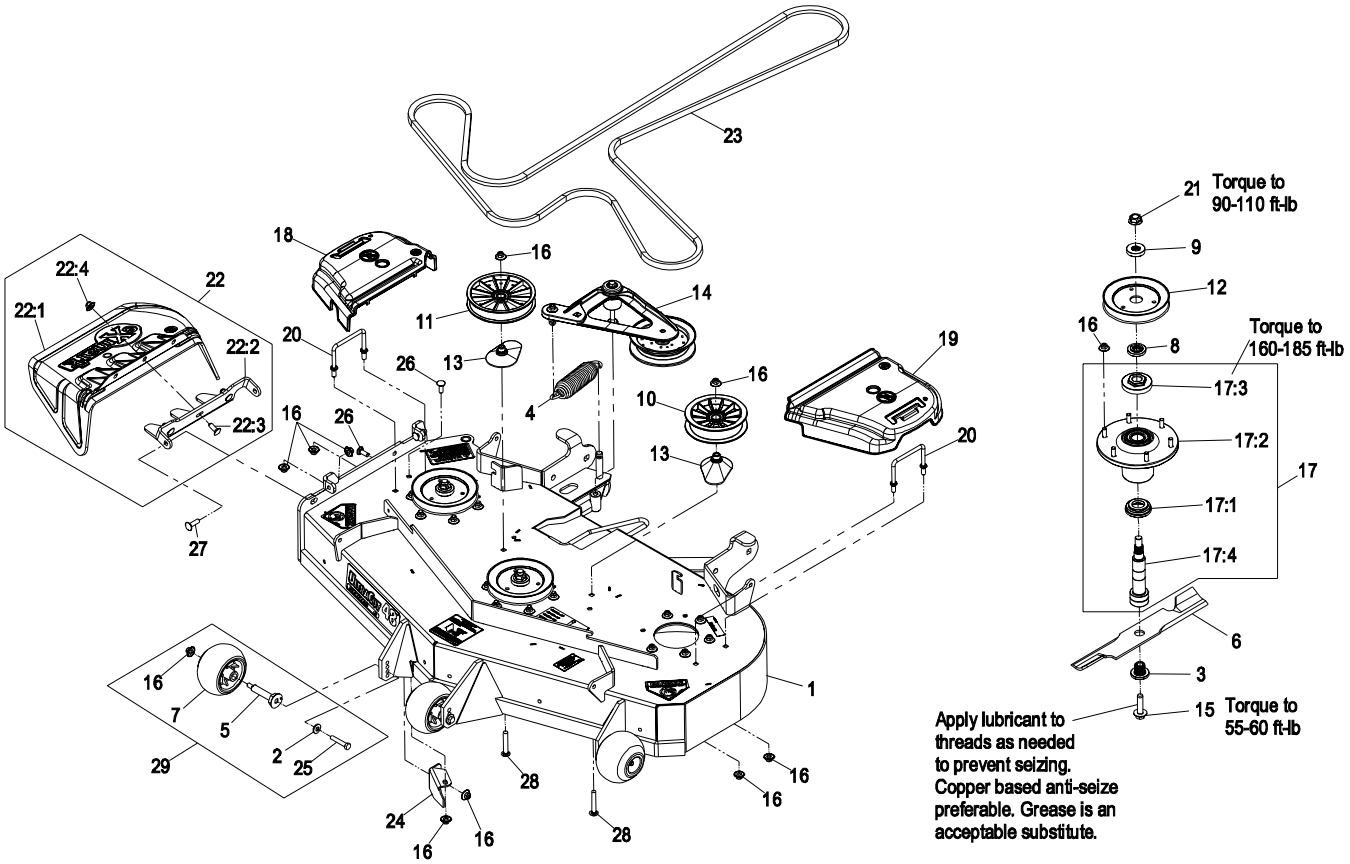


| Item | Part No. | Description | Qty. |
|---|---|---|---|
| 1 | 109-9008 | Asm, Deck W/Decals 486 | 1 |
| 2 | 98-5975 | Washer, Spring Disc 3/8 | 3 |
| 3 | 103-3037 | Bushing, Splined | 3 |
| 4 | 116-0133 | Spring, Extension | 1 |
| 5 | 109-9851 | Axle, Anti-Scalp Roller | 3 |
| 6 | 103-6401 | Blade, Notched | 3 |
| ● | 103-6391 | Blade, Mulching | 3 |
| | 103-6386 | Blade, Low Lift | 3 |
| | 103-6381 | Blade, Solid | 3 |
| | 103-6396 | Blade, Extreme | 3 |
| 7 | 103-8415 | Roller, Anti-Scalp | 3 |
| 8 | 103-9522 | Spacer, Splined Stepped | 3 |
| 9 | 103-9523 | Spacer, Splined | 3 |
| 10 | 109-0977 | Pulley, Idler 5" | 1 |
| 11 | 109-2796 | Pulley, Idler 6" | 1 |
| 12 | 116-1443 | Sheave, Blade Drive 5.72 | 3 |
| 13 | 109-2872 | Spacer, Pulley | 2 |
| 14 | 109-2883 | Asm, Deck Idler | 1 |
| 15 | 109-9220 | Screw, SEMS Hex 1/2-20 x 2.18 | 3 |
| 16 | 109-6658 | Nut, Nyloc 3/8-16 Flg | 31 |
| 17 | 109-6917 | Asm, Spindle Housing | 3 |

| Item | Part No. | Description | Qty. |
|---|---|---|---|
| 17:1 | 103-9504 | Guard, Bottom | 1 |
| 17:2 | 103-9539 | Asm, Cutter Housing | 1 |
| 17:3 | 109-0916 | Nut, Spindle 7/8-14 | 1 |
| 17:4■ | 109-6881 | Spindle, Double Spline | 1 |
| 18 | 109-6935 | Cover, Belt RH 46-56 | 1 |
| 19 | 109-6936 | Cover, Belt LH 46-56 | 1 |
| 20 | 109-6982 | Wireform, Cover | 2 |
| 21 | 109-7033 | Nut, Flange 5/8-18 Centerlock | 3 |
| 22 | 109-7188 | Asm, Discharge Chute | 1 |
| 22:1 | 109-2738 | Chute, Discharge | 1 |
| 22:2 | 109-8675-01 | Bracket, Discharge Chute | 1 |
| 22:3 | 3231-22 | Bolt, Carriage 3/8-16 x 1 | 3 |
| 22:4 | 109-6658 | Nut, Nyloc 3/8-16 Flg | 3 |
| 23 | 109-8070 | Belt, V-B X 175.75 | 1 |
| 24 | 109-9010-01 | Baffle, Discharge 484/486 | 1 |
| 25 | 3211-46 | Screw, HH 3/8-24 x 2 Gr8 | 3 |
| 26 | 3231-22 | Bolt, Carriage 3/8-16 x 1 | 1 |
| 27 | 3231-28 | Bolt, Carriage 3/8-16 x 1 1/4 | 2 |
| 28 | 3231-44 | Bolt, Carriage 3/8-16 x 2 1/2 | 2 |
| 29 | 109-2098 | Kit, Anti-Scalp | 3 |
| 30 | 109-9643 | Asm, Deck Complete 486 | 1 |

Exmark red touch up paint (spray paint – P/N 1-850337 - .6 oz liquid bottle – P/N 103-9140).

- ■ Requires installation of Micro-Mulch accessory for proper mulching. Mulch kit P/N MK486.
- ■ Apply Mobil HTS grease (P/N 103-5217 1.5 oz packet) (or a food-grade anti-seize) between the spindles and bearings. DO NOT use a copper or nickel based anti-seize.

# 48” DECK W/DECALS ASSEMBLY – 109-9008

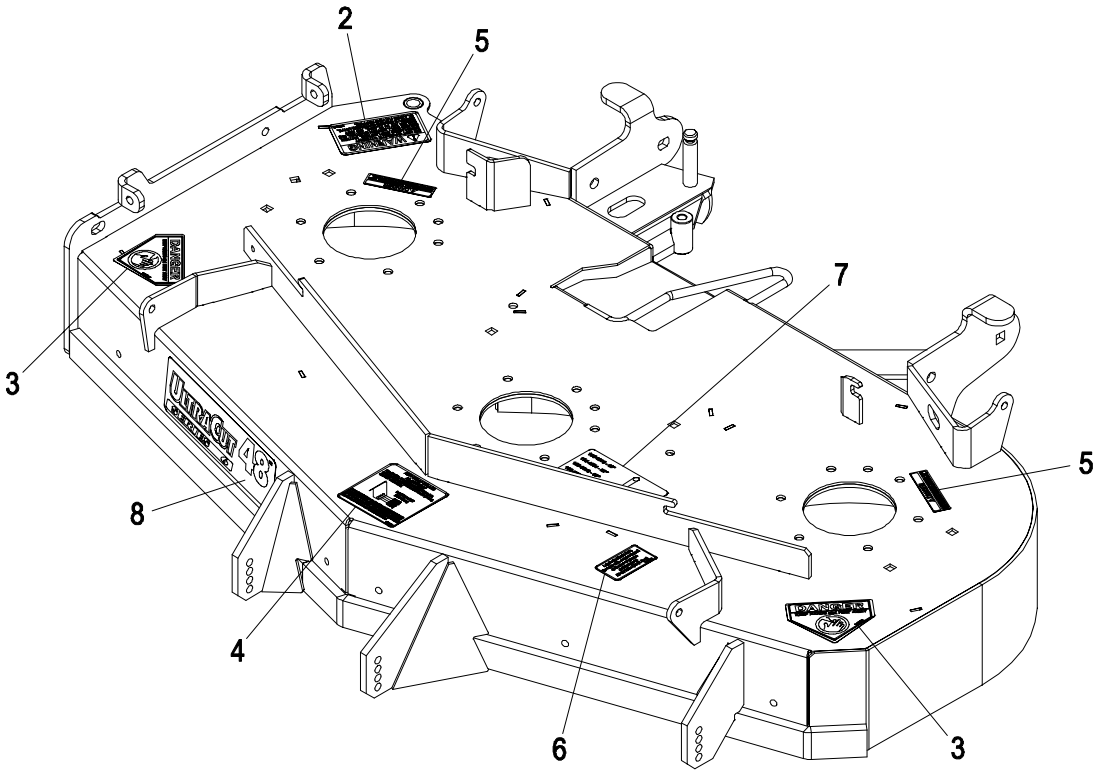


| Item | Part No. | Description | Qty. |
|---|---|---|---|
| 2 | 1-303508 | Decal, Discharge Warning | 1 |
| 3 | 1-403005 | Decal, Danger | 2 |
| 4 | 1-633922 | Decal, Anti-Scalp | 1 |
| 5 | 98-5954 | Decal, Danger | 2 |

| Item | Part No. | Description | Qty. |
|---|---|---|---|
| 6 | 109-3148 | Decal, Bolt Torque | 1 |
| 7 | 109-9361 | Decal, Belt Routing | 1 |
| 8 | 109-9437 | Decal, Ultracut 48 | 1 |

# 52” DECK GROUP

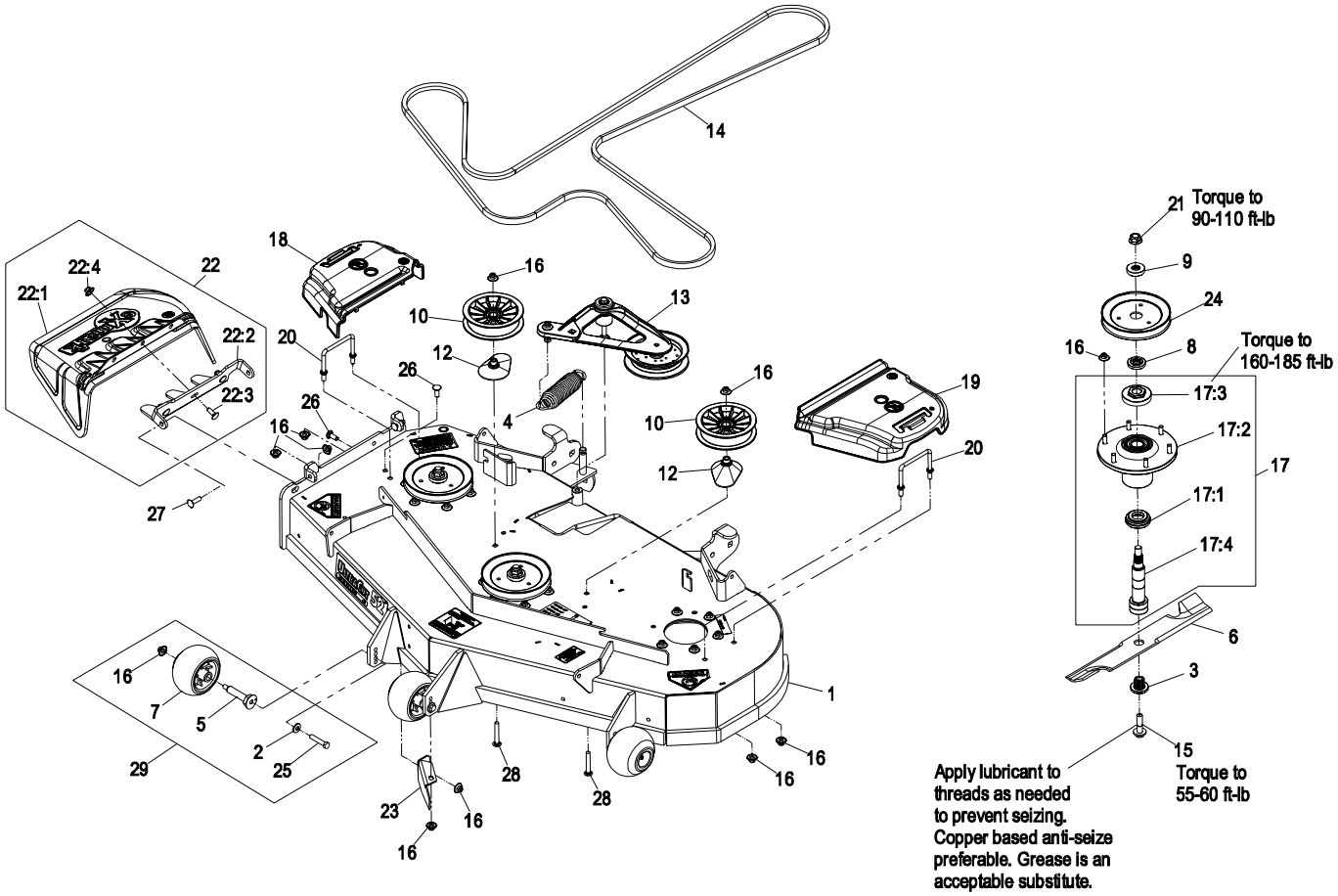


| Item | Part No. | Description | Qty. |
|---|---|---|---|
| 1 | 109-9149 | Asm, Deck W/ Decals 526 | 1 |
| 2 | 98-5975 | Washer, Spring Disc 3/8 | 3 |
| 3 | 103-3037 | Bushing, Splined | 3 |
| 4 | 116-0133 | Spring, Extension | 1 |
| 5 | 109-9851 | Axle, Anti-Scalp Roller | 3 |
| 6 | 103-6402 | Blade-Notched | 3 |
| ● | 103-6392 | Blade, Mulching | 3 |
| | 103-6387 | Blade, Low Lift | 3 |
| | 103-6382 | Blade, Solid | 3 |
| | 103-6397 | Blade, Extreme | 3 |
| 7 | 103-8415 | Roller, Anti-Scalp | 3 |
| 8 | 103-9522 | Spacer, Splined Stepped | 3 |
| 9 | 103-9523 | Spacer, Splined | 3 |
| 10 | 109-0977 | Pulley, Idler 5” | 2 |
| 12 | 109-2872 | Spacer, Pulley | 2 |
| 13 | 109-2883 | Asm, Deck Idler | 1 |
| 14 | 109-4994 | Belt, V-B X 186.00” | 1 |
| 15 | 109-9220 | Screw, SEMS Hex 1/2-20 x 2.18 | 3 |
| 16 | 109-6658 | Nut, Nyloc 3/8-16 Flg | 31 |
| 17 | 109-6917 | Asm, Spindle Housing | 3 |
| 17:1 | 103-9504 | Guard, Bottom | 1 |

| Item | Part No. | Description | Qty. |
|---|---|---|---|
| 17:2 | 103-9539 | Asm, Cutter Housing | 1 |
| 17:3 | 109-0916 | Nut, Spindle 7/8-14 | 1 |
| 17:4■ | 109-6881 | Spindle, Double Spline | 1 |
| 18 | 109-6935 | Cover, Belt RH 46-56 | 1 |
| 19 | 109-6936 | Cover, Belt LH 46-56 | 1 |
| 20 | 109-6982 | Wireform, Cover | 2 |
| 21 | 109-7033 | Nut, Flange 5/8-18 Centerlock | 3 |
| 22 | 109-7188 | Asm, Discharge Chute | 1 |
| 22:1 | 109-2738 | Chute, Discharge | 1 |
| 22:2 | 109-8675-01 | Bracket, Discharge Chute | 1 |
| 22:3 | 3231-22 | Bolt, Carriage 3/8-16 x 1 | 3 |
| 22:4 | 109-6658 | Nut, Nyloc 3/8-16 Flg | 3 |
| 23 | 109-9915-01 | Baffle, Discharge 52/60 | 1 |
| 24 | 116-0185 | Sheave, Blade Drive | 3 |
| 25 | 3211-46 | Screw, HH 3/8-24 x 2 Gr8 | 3 |
| 26 | 3231-22 | Bolt, Carriage 3/8-16 x 1 | 2 |
| 27 | 3231-28 | Bolt, Carriage 3/8-16 x 1 1/4 | 2 |
| 28 | 3231-44 | Bolt, Carriage 3/8-16 x 2 1/2 | 2 |
| 29 | 109-2098 | Kit, Antiscalp | 3 |
| 30 | 109-9645 | Asm, Deck Complete 526 | 1 |

Exmark red touch up paint (spray paint – P/N 1-850337 - .6 oz liquid bottle – P/N 103-9140).

■ Requires installation of Micro-Mulch accessory for proper mulching. Mulch kit P/N MK526.

■ Apply Mobil HTS grease (P/N 103-5217 1.5 oz packet) (or a food-grade anti-seize) between the spindles and bearings. DO NOT use a copper or nickel based anti-seize.

# 52” DECK W/DECALS ASSEMBLY – 109-9149

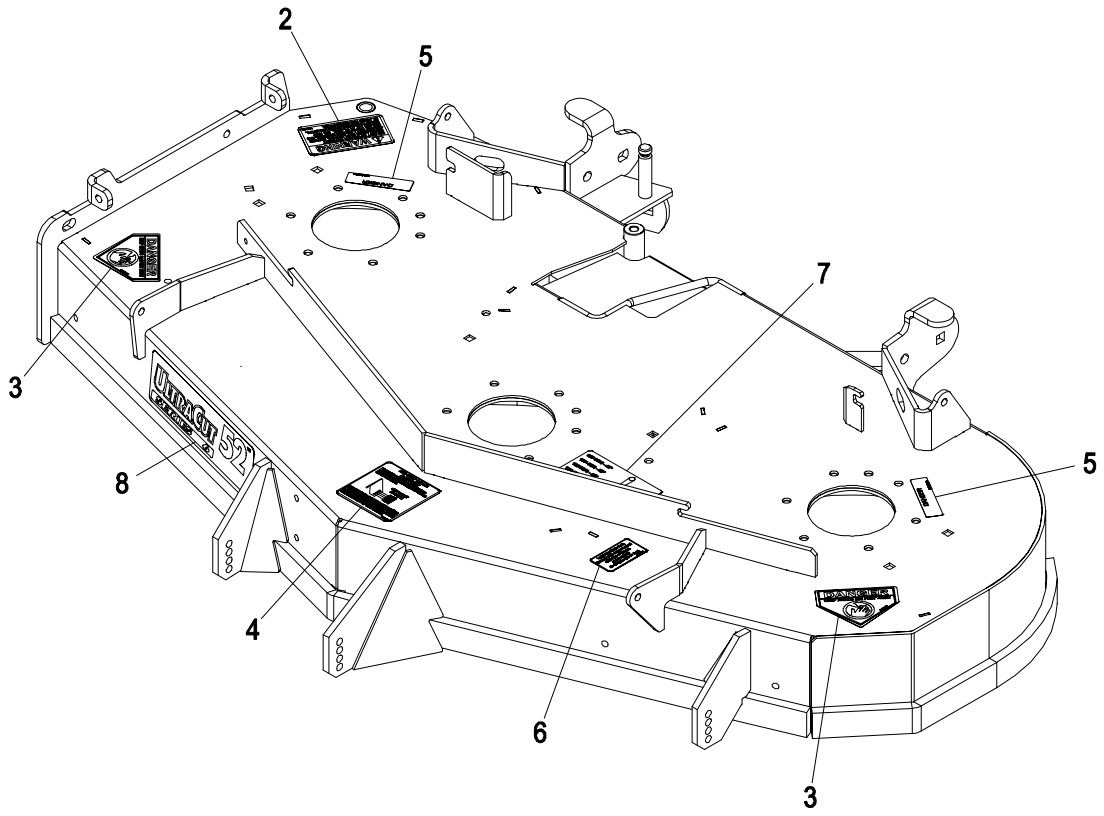


| Item | Part No. | Description | Qty. |
|---|---|---|---|
| 2 | 1-303508 | Decal, Warning, Discharge | 1 |
| 3 | 1-403005 | Decal, Danger | 2 |
| 4 | 1-633922 | Decal, Antiscalp | 1 |
| 5 | 98-5954 | Decal, Cover, Missing | 2 |

| Item | Part No. | Description | Qty. |
|---|---|---|---|
| 6 | 109-3148 | Decal, Bolt Torque | 1 |
| 7 | 109-9361 | Decal, Belt Routing | 1 |
| 8 | 109-9438 | Decal, Ultracut 52 Series 6 | 1 |

# 60” DECK GROUP

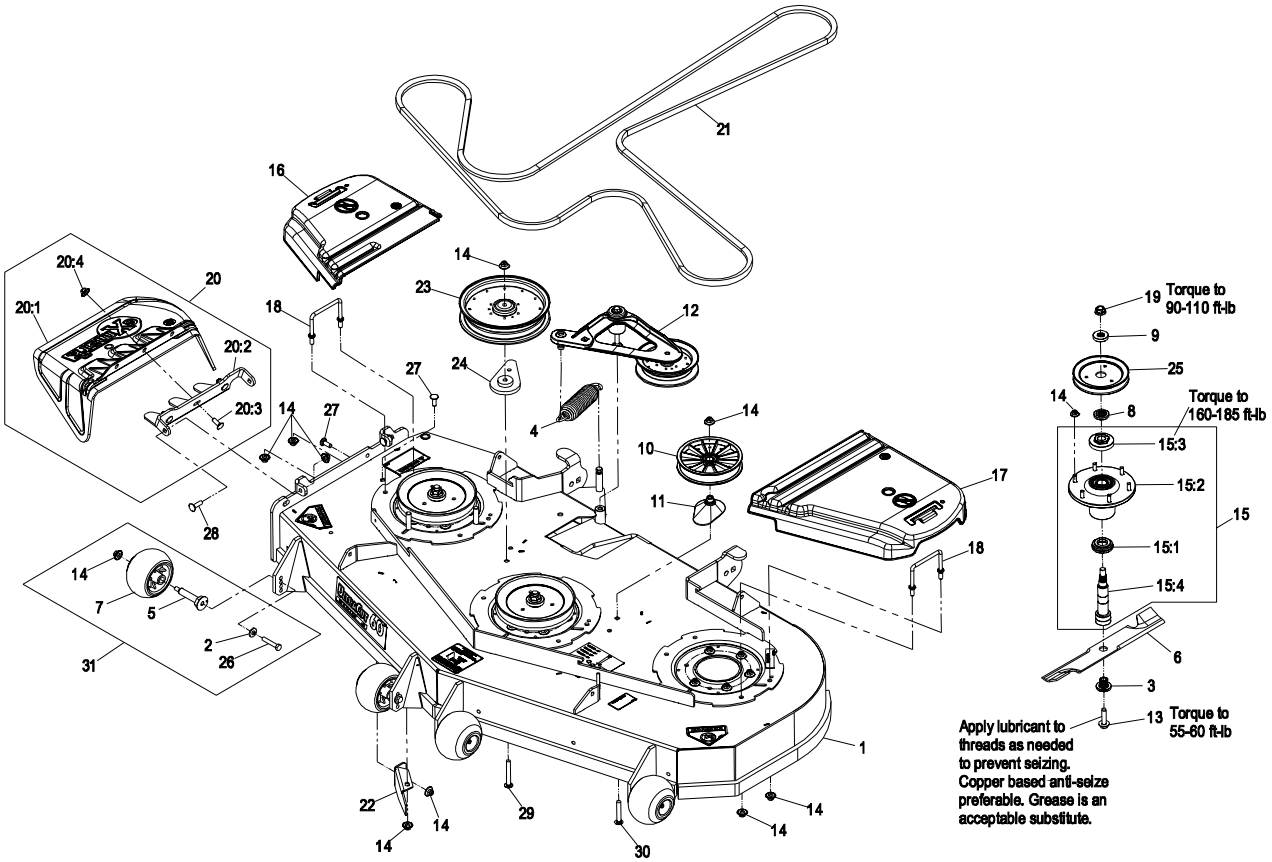


| Item | Part No. | Description | Qty. |
|---|---|---|---|
| 1 | 109-9148 | Asm, Deck W/ Decals 606 | 1 |
| 2 | 98-5975 | Washer, Spring Disc 3/8 | 4 |
| 3 | 103-3037 | Bushing, Splined | 3 |
| 4 | 116-0133 | Spring, Extension | 1 |
| 5 | 109-9851 | Axle, Anti-Scalp Roller | 3 |
| 6 | 103-6403 | Blade, Notched | 3 |
| ● | 103-6393 | Blade, Mulching | 3 |
| | 103-6388 | Blade, Low Lift | 3 |
| | 103-6383 | Blade, Solid | 3 |
| | 103-6398 | Blade, Extreme | 3 |
| 7 | 103-8415 | Roller, Anti-Scalp | 4 |
| 8 | 103-9522 | Spacer, Splined Stepped | 3 |
| 9 | 103-9523 | Spacer, Splined | 3 |
| 10 | 109-2796 | Pulley, Idler 6” | 1 |
| 11 | 109-2872 | Spacer, Pulley | 1 |
| 12 | 109-2883 | Asm, Deck Idler | 1 |
| 13 | 109-9220 | Screw, SEMS Hex 1/2-20 x 2.18 | 3 |
| 14 | 109-6658 | Nut, Nyloc 3/8-16 Flg | 32 |
| 15 | 109-6917 | Asm, Spindle Housing | 3 |
| 15:1 | 103-9504 | Guard, Bottom | 1 |
| 15:2 | 103-9539 | Asm, Cutter Housing | 1 |
| 15:3 | 109-0916 | Nut, Spindle 7/8-14 | 1 |

| Item | Part No. | Description | Qty. |
|---|---|---|---|
| 15:4■ | 109-6881 | Spindle, Double Spline | 1 |
| 16 | 116-0094 | Cover, Belt RH 60-72 | 1 |
| 17 | 109-6938 | Cover, Belt LH 60-72 | 1 |
| 18 | 109-6982 | Wireform, Cover | 2 |
| 19 | 109-7033 | Nut, Flange 5/8-18 Centerlock | 3 |
| 20 | 109-7188 | Asm, Discharge Chute | 1 |
| 20:1 | 109-2738 | Chute, Discharge | 1 |
| 20:2 | 109-8675-01 | Bracket, Discharge Chute | 1 |
| 20:3 | 3231-22 | Bolt, Carriage 3/8-16 x 1 | 3 |
| 20:4 | 109-6658 | Nut, Nyloc 3/8-16 Flg | 3 |
| 21 | 109-8073 | Belt, V-5V-198.75 | 1 |
| 22 | 109-9915-01 | Baffle, Discharge 52/60 | 1 |
| 23 | 109-8590 | Pulley, Idler 8 In Flanged | 1 |
| 24 | 109-9416 | Wld, Spacer Idler | 1 |
| 25 | 109-9511 | Sheave, Blade Drive 7.25 | 3 |
| 26 | 3211-46 | Screw, HH 3/8-24 x 2 Gr8 | 4 |
| 27 | 3231-22 | Bolt, Carriage 3/8-16 x 1 | 2 |
| 28 | 3231-28 | Bolt, Carriage 3/8-16 x 1 1/4 | 2 |
| 29 | 3231-42 | Bolt, Carriage 3/8-16 x 3 | 1 |
| 30 | 3231-44 | Bolt, Carriage 3/8-16 x 2 1/2 | 1 |
| 31 | 109-2098 | Kit, Antiscalp | 4 |
| 32 | 109-9647 | Asm, Deck Complete 606 | 1 |

Exmark red touch up paint (spray paint – P/N 1-850337 - .6 oz liquid bottle – P/N 103-9140).

- ● Requires installation of Micro-Mulch accessory for proper mulching. Mulch kit P/N MK606.
- ■ Apply Mobil HTS grease (P/N 103-5217 1.5 oz packet) (or a food-grade anti-seize) between the spindles and bearings. DO NOT use a copper or nickel based anti-seize.

# 60” DECK W/DECALS ASSEMBLY – 109-9148

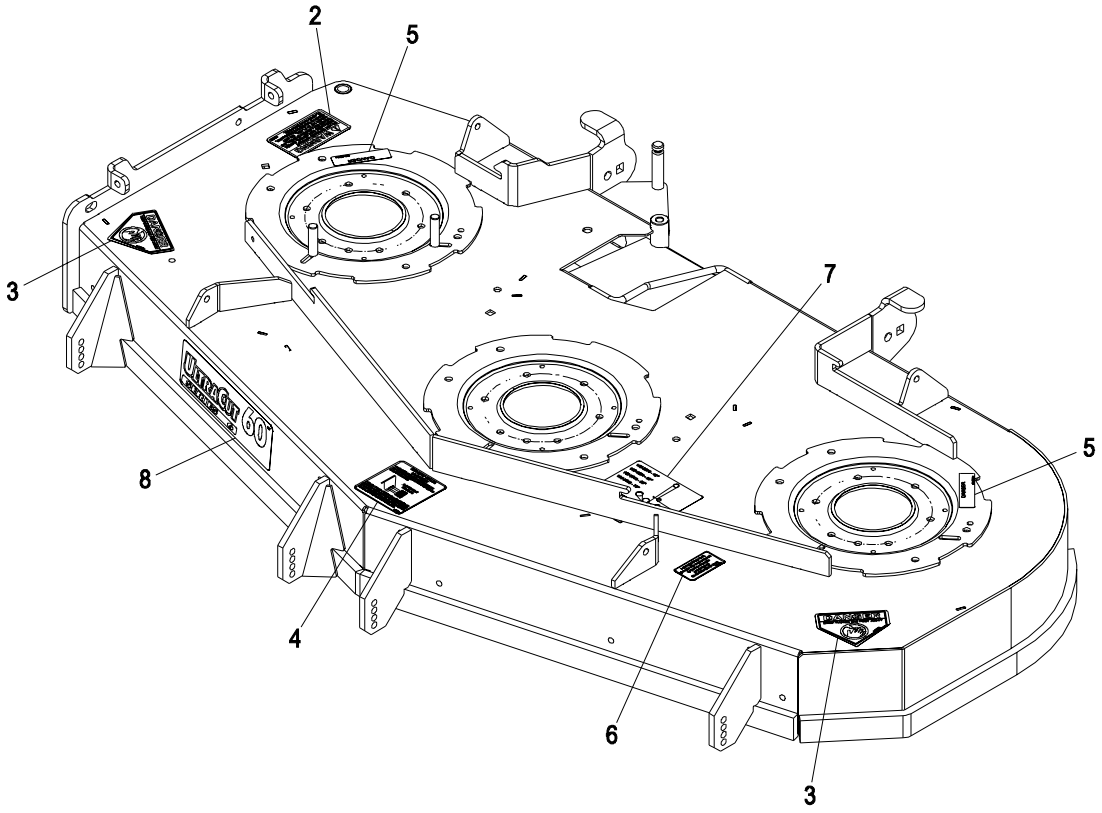


| Item | Part No. | Description | Qty. |
|---|---|---|---|
| 2 | 1-303508 | Decal, Warning, Discharge | 1 |
| 3 | 1-403005 | Decal, Danger | 2 |
| 4 | 1-633922 | Decal, Antiscalp | 1 |
| 5 | 98-5954 | Decal, Cover, Missing | 2 |

| Item | Part No. | Description | Qty. |
|---|---|---|---|
| 6 | 109-3148 | Decal, Bolt Torque | 1 |
| 7 | 109-9361 | Decal, Belt Routing | 1 |
| 8 | 109-9439 | Decal, Ultracut 60 Series 6 | 1 |

# 72” DECK GROUP

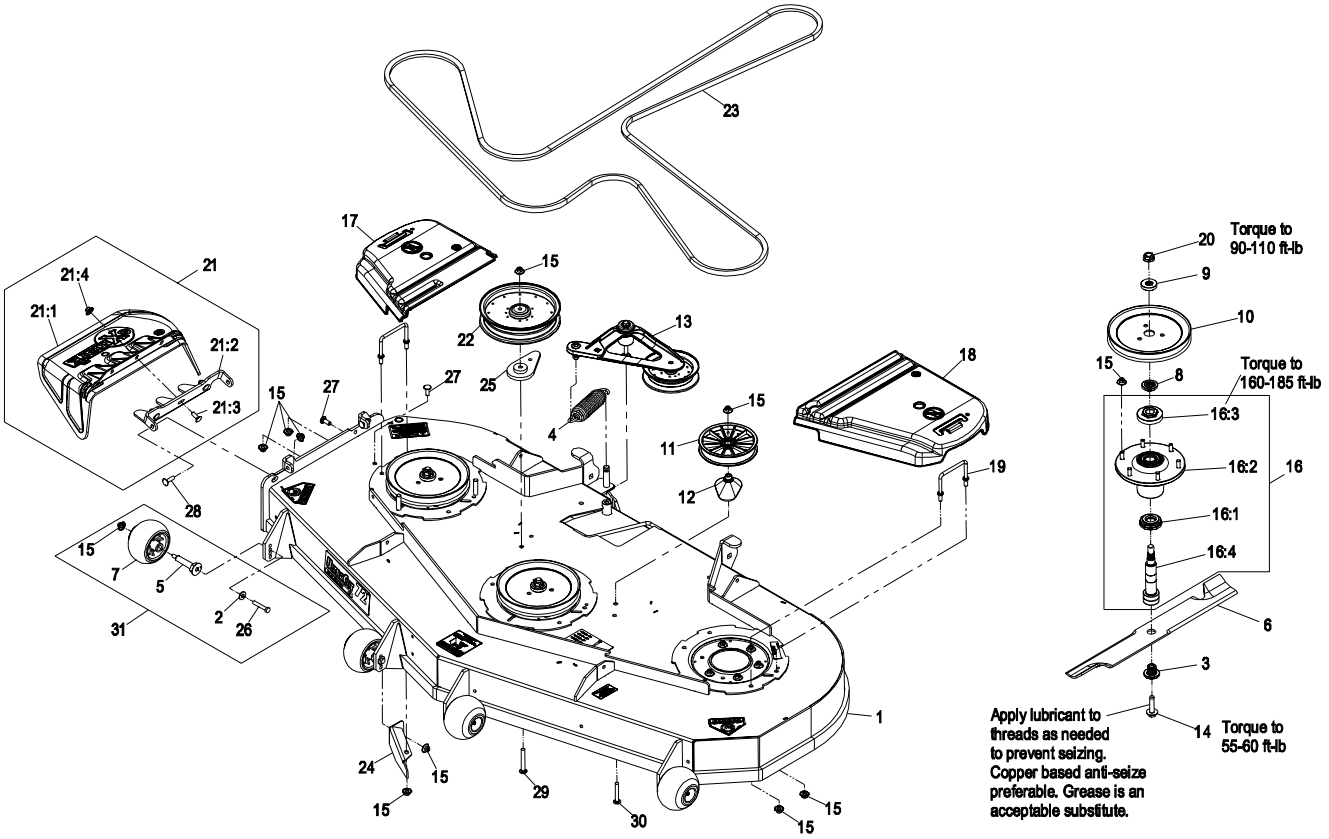


| Item | Part No. | Description | Qty. |
|---|---|---|---|
| 1 | 109-9133 | Asm, Deck W/ Decals 726 | 1 |
| 2 | 98-5975 | Washer, Spring Disc 3/8 | 4 |
| 3 | 103-3037 | Bushing, Splined | 3 |
| 4 | 116-0133 | Spring, Extension | 1 |
| 5 | 109-9851 | Axle, Anti-Scalp Roller | 4 |
| 6 | 103-6404 | Blade, Notched | 3 |
| ● | 103-6394 | Blade, Mulching | 3 |
| | 103-6389 | Blade, Low Lift | 3 |
| | 103-6384 | Blade, Solid | 3 |
| | 103-6399 | Blade, Extreme | 3 |
| 7 | 103-8415 | Roller, Anti-Scalp | 4 |
| 8 | 103-9522 | Spacer, Splined Stepped | 3 |
| 9 | 103-9523 | Spacer, Splined | 3 |
| 10 | 109-2180 | Sheave, Blade Drive 9.00 | 3 |
| 11 | 109-2796 | Pulley, Idler 6” | 1 |
| 12 | 109-2872 | Spacer, Pulley | 1 |
| 13 | 109-2883 | Asm, Deck Idler | 1 |
| 14 | 109-9220 | Screw, SEMS Hex 1/2-20 x 2.18 | 3 |
| 15 | 109-6658 | Nut, Nyloc 3/8-16 Flg | 32 |
| 16 | 109-6917 | Asm, Spindle Housing | 3 |
| 16:1 | 103-9504 | Guard, Bottom | 1 |
| 16:2 | 103-9539 | Asm, Cutter Housing | 1 |

| Item | Part No. | Description | Qty. |
|---|---|---|---|
| 16:3 | 109-0916 | Nut, Spindle 7/8-14 | 1 |
| 16:4■ | 109-6881 | Spindle, Double Spline | 1 |
| 17 | 116-0094 | Cover, Belt RH 60-72 | 1 |
| 18 | 109-6938 | Cover, Belt LH 60-72 | 1 |
| 19 | 109-6982 | Wireform, Cover | 2 |
| 20 | 109-7033 | Nut, Flange 5/8-18 Centerlock | 3 |
| 21 | 109-7188 | Asm, Discharge Chute | 1 |
| 21:1 | 109-2738 | Chute, Discharge | 1 |
| 21:2 | 109-8675-01 | Bracket, Discharge Chute | 1 |
| 21:3 | 3231-22 | Bolt, Carriage 3/8-16 x 1 | 3 |
| 21:4 | 109-6658 | Nut, Nyloc 3/8-16 Flg | 3 |
| 22 | 109-8590 | Pulley, Idler 8 In Flanged | 1 |
| 23 | 109-9023 | Belt, V-5V X 219.00” | 1 |
| 24 | 109-9695-01 | Baffle, Discharge 726 | 1 |
| 25 | 109-9416 | Wld, Spacer Idler | 1 |
| 26 | 3211-46 | Screw, HH 3/8-24 x 2 Gr8 | 4 |
| 27 | 3231-22 | Bolt, Carriage 3/8-16 x 1 | 2 |
| 28 | 3231-28 | Bolt, Carriage 3/8-16 x 1 1/4 | 2 |
| 29 | 3231-42 | Bolt, Carriage 3/8-16 x 3 | 1 |
| 30 | 3231-44 | Bolt, Carriage 3/8-16 x 2 1/2 | 1 |
| 31 | 109-2098 | Kit, Antiscalp | 3 |
| 32 | 109-9649 | Asm, Deck Complete 726 | 1 |

Exmark red touch up paint (spray paint – P/N 1-850337 - .6 oz liquid bottle – P/N 103-9140).

■ Requires installation of Micro-Mulch accessory for proper mulching. Mulch kit P/N MK726

■ Apply Mobil HTS grease (P/N 103-5217 1.5 oz packet) (or a food-grade anti-seize) between the spindles and bearings. DO NOT use a copper or nickel based anti-seize.

# 72” DECK W/DECALS ASSEMBLY – 109-9133

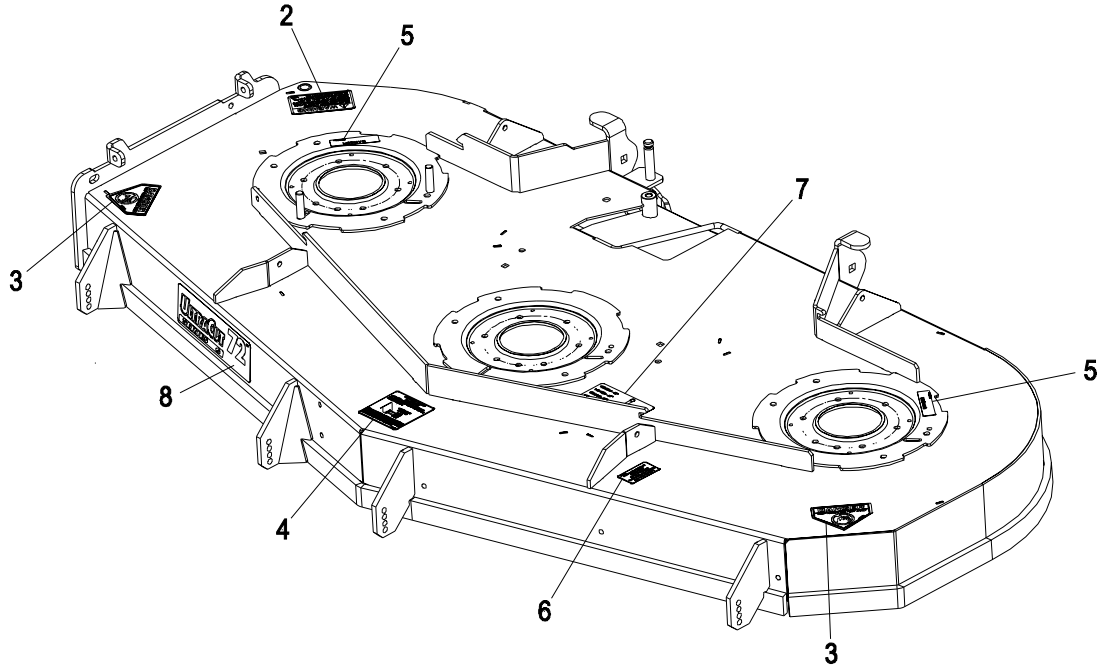


| Item | Part No. | Description | Qty. |
|---|---|---|---|
| 2 | 1-303508 | Decal, Warning, Discharge | 1 |
| 3 | 1-403005 | Decal, Danger | 2 |
| 4 | 1-633922 | Decal, Antiscalp | 1 |
| 5 | 98-5954 | Decal, Cover, Missing | 2 |

| Item | Part No. | Description | Qty. |
|---|---|---|---|
| 6 | 109-3148 | Decal, Bolt Torque | 1 |
| 7 | 109-9361 | Decal, Belt Routing | 1 |
| 8 | 109-9440 | Decal, Ultracut 72 Series 6 | 1 |

# DECK IDLER ASSEMBLY – 109-2883

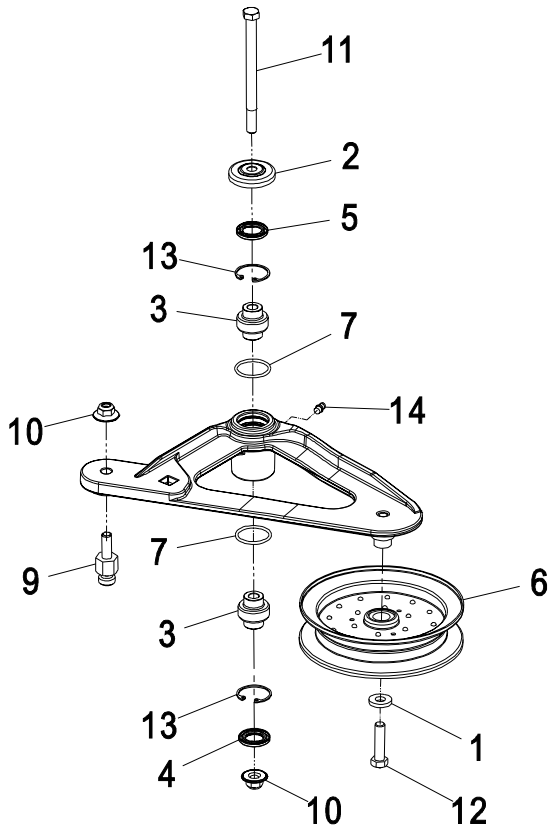


| Item | Part No. | Description | Qty. |
|---|---|---|---|
| 1 | 43-0940 | Spacer-Hub, Blower | 1 |
| 2 | 103-2916 | Guard, Top | 1 |
| 3 | 103-3504 | Bearing, Spherical | 2 |
| 4 | 103-3505 | Seal, Double Lip | 1 |
| 5 | 103-3506 | Seal, Single Lip | 1 |
| 6 | 103-8743 | Pulley, Idler 5”Flanged | 1 |
| 7 | 106-7159 | O-Ring | 2 |

| Item | Part No. | Description | Qty. |
|---|---|---|---|
| 9 | 109-7399 | Pin, Spring Anchor | 1 |
| 10 | 109-6658 | Nut, Nyloc 3/8-16 Flg | 2 |
| 11 | 109-7409 | Screw, Shoulder 3/8-16 x 5 | 1 |
| 12 | 323-8 | Screw, HH 3/8-16 x 1 1/2 | 1 |
| 13 | 32120-10 | Ring, Retaining | 2 |
| 14 | 302-19 | Zerk, 1/4-28 Str | 1 |

# CUTTER HOUSING ASSEMBLY – 103-9539

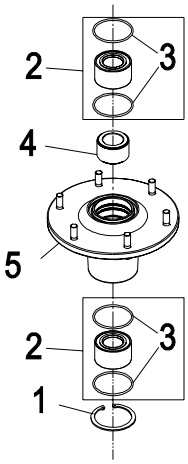


| Item | Part No. | Description | Qty. |
|---|---|---|---|
| 1 | 92-5581 | Ring-Retaining | 1 |
| 2 | 109-2064 | Asm, Bearing W/O-Rings | 2 |
| 3 | 103-5895 | O-Ring | 4 |

| Item | Part No. | Description | Qty. |
|---|---|---|---|
| 4 | 103-9506 | Spacer, Bearing | 1 |
| 5 | 109-0764 | Asm, Housing W/Studs | 1 |

# MAINFRAME GROUP

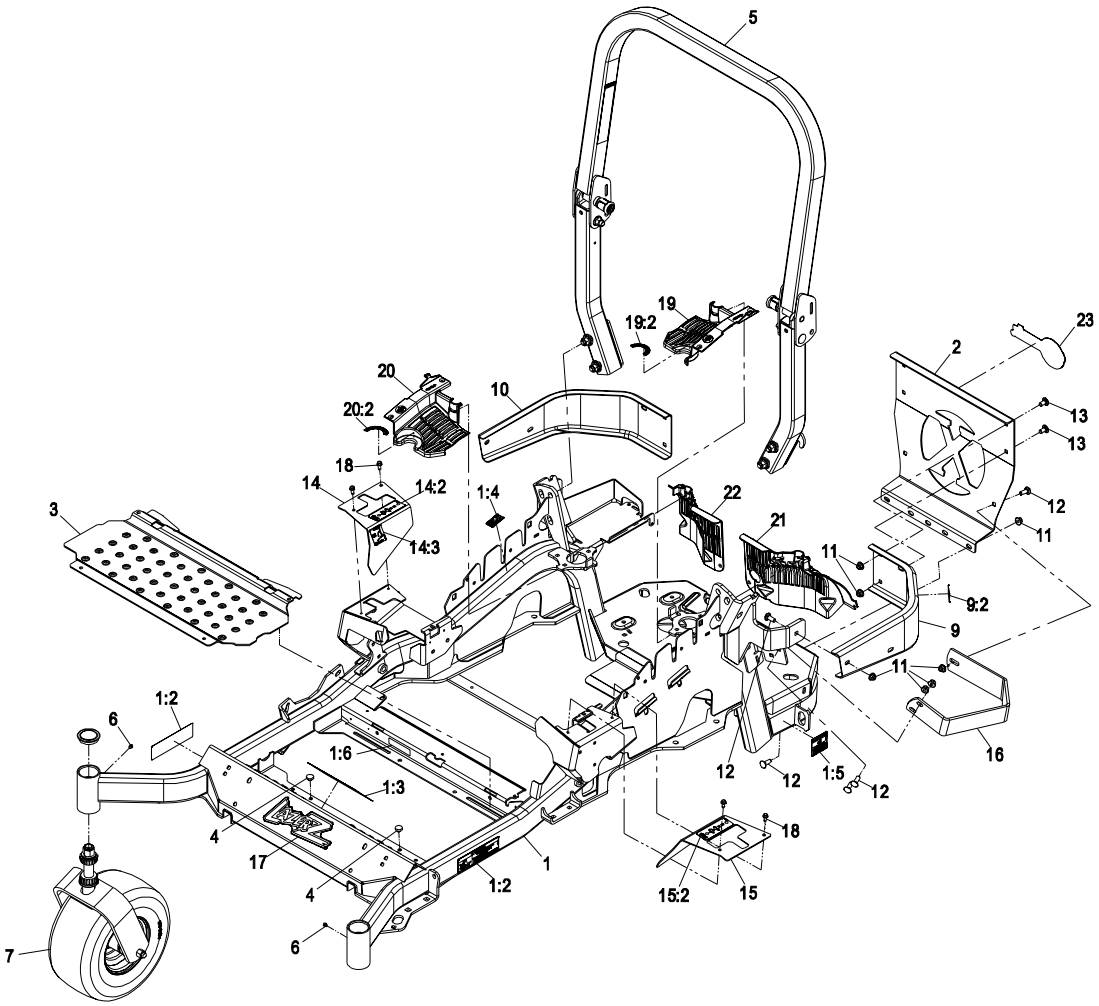


| Item | Part No. | Description | Qty. |
|---|---|---|---|
| 1 | 109-7345 | Frame, Main 48/52 W/Decals | 1 |
| | 109-7347 | Frame, Main 60 W/Decals | 1 |
| | 109-7349 | Frame, Main 72 W/Decals | 1 |
| 1:2 | 109-9477 | Decal, Warning Spring Load | 2 |
| 1:3 | 107-2112 | Decal, Warning | 1 |
| 1:4 | 103-2076 | Decal, Caution Hot Surface | 2 |
| 1:5 | 116-0205 | Decal, Belt Drive | 2 |
| 1:6 | 117-2718 | Decal, Spark Arrester | 1 |
| 2 | 109-8863-03 | Plate, Rear Guard | 1 |
| 3 | 116-0024-01 | Floorpan | 1 |
| 4 | 1-513658 | Bumper | 2 |
| 5 | 116-0230 | Asm, ROPS Service | 1 |
| 6 | 1-811010 | Plug | 2 |
| 7▲ | | Asm, Caster Wheel (60” & 72”) | 2 |
| | | Asm, Caster Wheel (48” & 52”) | 2 |
| 9 | 116-0180 | Bumper, Rear LH W/Decal | 1 |
| 9:2 | 103-2076 | Decal, Caution Hot Surface | 1 |
| 10 | 116-0057-03 | Bumper, Rear RH | 1 |
| 11 | 104-8301 | Nut, Nyloc 3/8-16 Flg | 11 |

| Item | Part No. | Description | Qty. |
|---|---|---|---|
| 12 | 3231-22 | Bolt, Carriage 3/8-16 x 1 | 7 |
| 13 | 3231-21 | Bolt, Carriage 3/8-16 x 3/4 | 4 |
| 14 | 116-0579 | Asm, Motion Control Cover W/Decal RH | 1 |
| 14:2 | 109-7232 | Decal, Motion Control | 1 |
| 14:3 | 109-7929 | Decal, Park Brake | 1 |
| 15 | 116-0580 | Asm, Motion Control Cover W/Decal LH | 1 |
| 15:2 | 109-7232 | Decal, Motion Control | 1 |
| 16 | 116-0043-03 | Guard, Muffler | 1 |
| 17 | 103-3113 | Decal, Lazer Model | 1 |
| 18 | 32144-10 | Screw, HWH 1/4-20 x .62 | 4 |
| 19 | 116-0170 | Asm, Guard, Hydro W/Decal | 1 |
| 19:2 | 116-0157 | Decal, Hydro Oil | 1 |
| 20 | 116-0171 | Asm, Guard, Hydro W/Decal | 1 |
| 20:2 | 116-0157 | Decal, Hydro Oil | 1 |
| 21 | 109-9709 | Guard, Hydro Rear | |
| | | LH Trim (34HP Kohler) | 1 |
| | 109-9057 | Guard, Hydro Rear LH | 1 |
| 22 | 109-9058 | Guard, Hydro Rear RH | 1 |
| 23 | 103-2883 | Decal, Exmark Logo | 1 |

Exmark red touch up paint (spray paint – P/N 1-850337 - .6 oz liquid bottle – P/N 103-9140).
Exmark black touch up spray paint – gloss black.

▲ See pages 15 & 16.

# ROPS ASSEMBLY – 116-0230

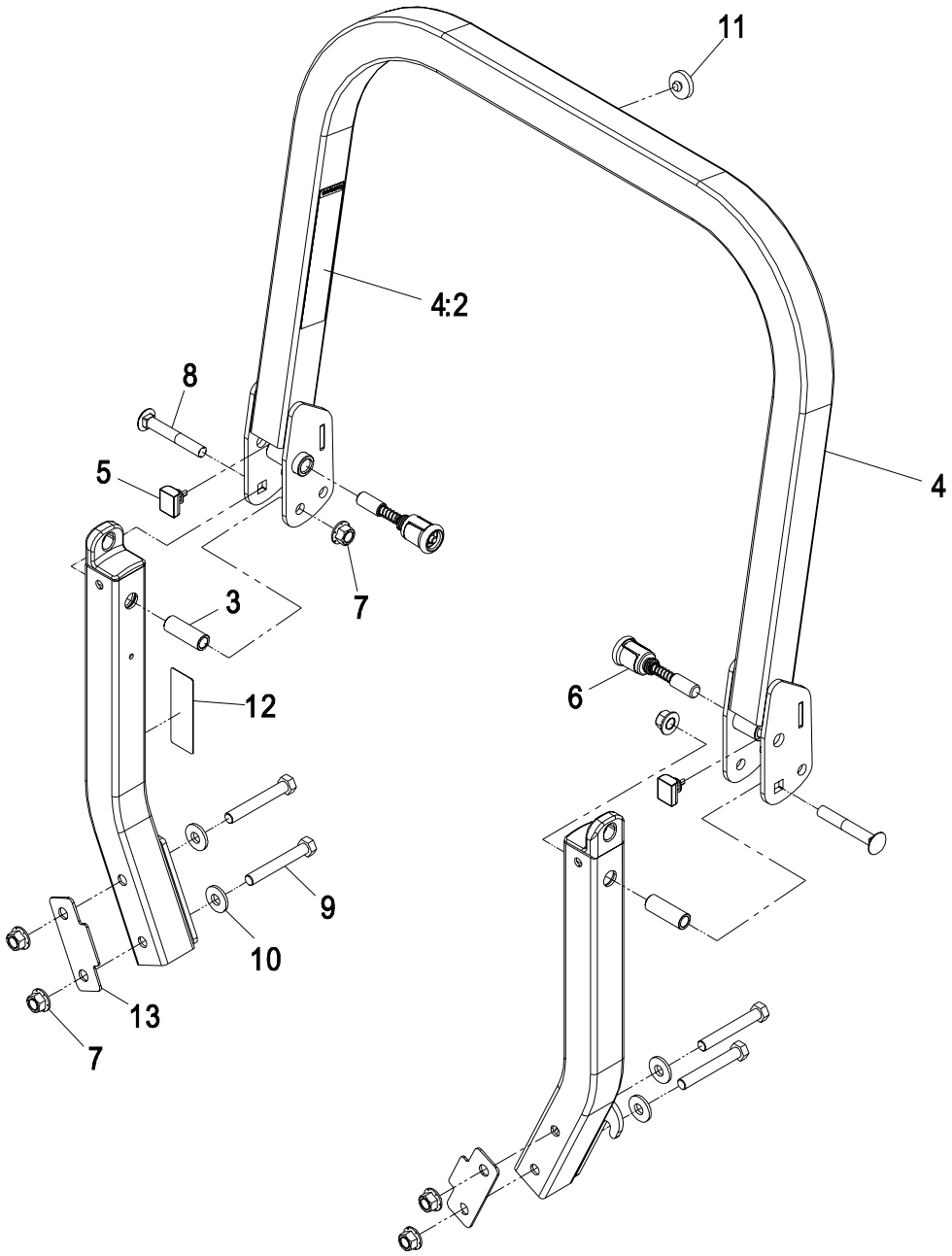


| Item | Part No. | Description | Qty. |
|---|---|---|---|
| 3 | 109-6653 | Spacer | 2 |
| 4 | 116-0019 | Asm, Rops Upper W/Decal | 1 |
| 4:2 | 107-2102 | Decal, Warning, Folding Rops | 1 |
| 5 | 109-5337 | Bumper, Rops | 2 |
| 6 | 116-0104 | Asm, Spring Pin | 2 |
| 7 | 99-5107 | Nut, Lock 1/2-13 | 6 |

| Item | Part No. | Description | Qty. |
|---|---|---|---|
| 8 | 3233-10 | Bolt, Carriage 1/2-13 x 3 1/2 | 2 |
| 9 | 325-17 | Screw, HH 1/2-13 x 4 | 4 |
| 10 | 1-513435 | Washer, Spring Disc 1/2 | 4 |
| 11 | 109-9233 | Bumper, Rubber Push-In | 1 |
| 12 | 116-0090 | Decal, Caution Fuel Vent | 1 |
| 13 | 116-0960 | Spacer | 2 |

# CASTER WHEEL ASSEMBLY – 48” & 52”

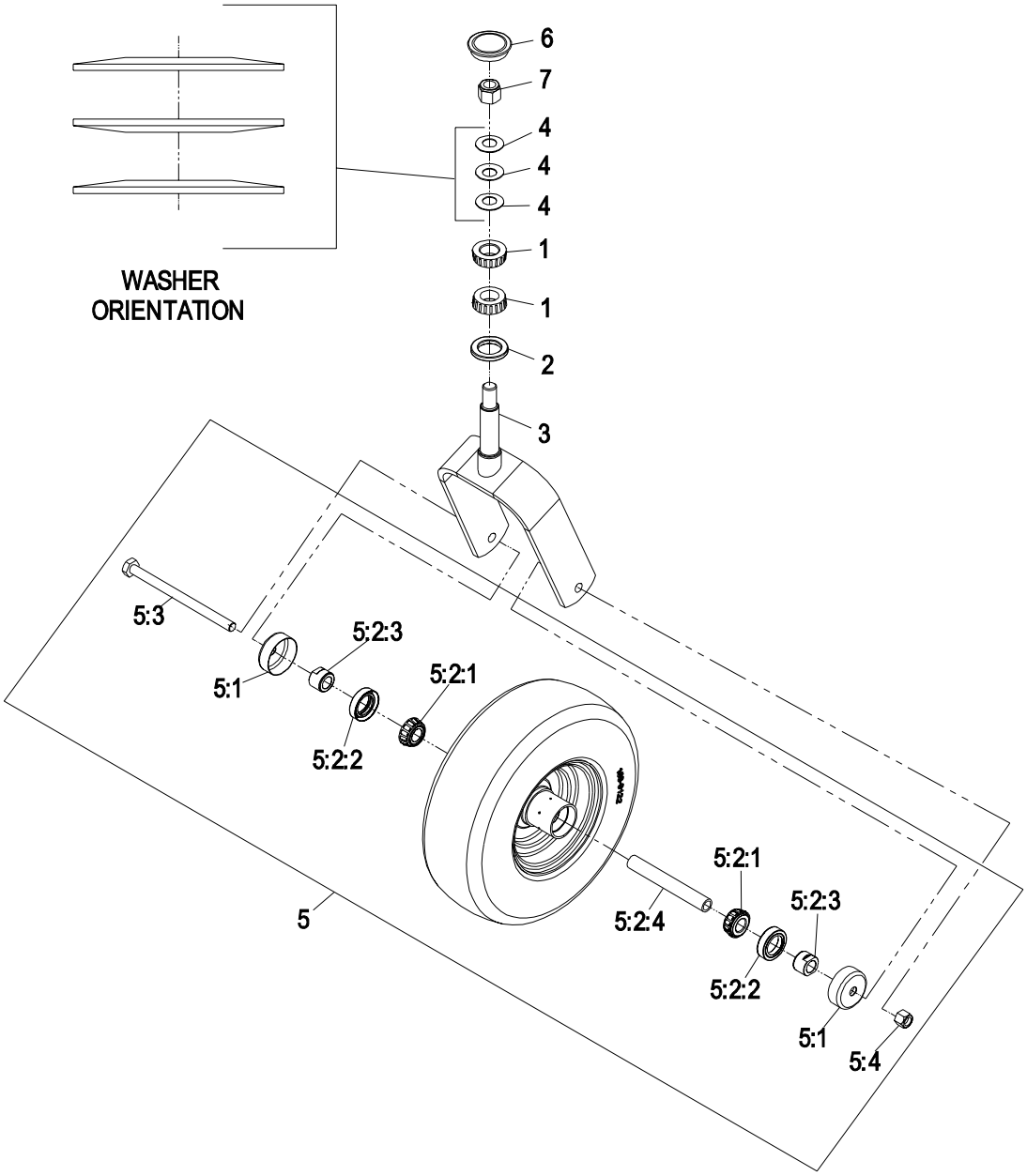


| Item | Part No. | Description | Qty. |
|---|---|---|---|
| 1 | 1-543509 | Cone, Bearing Tapered Roller | 2 |
| 2 | 1-543511 | Seal, Grease | 1 |
| 3 | 109-1092-01 | Wld, Caster Fork | 1 |
| 4 | 1-633508 | Washer, Spring Disc | 3 |
| 5 | 109-9126 | Asm, Wheel And Tire W/Axle | 1 |
| 5:1 | 103-2768 | Guard, Seal | 2 |
| 5:2:1 | 1-633585 | Bearing, Cone Tapered Roller | 2 |

| Item | Part No. | Description | Qty. |
|---|---|---|---|
| 5:2:2 | 103-0063 | Seal, Double Lip | 2 |
| 5:2:3▲ | 103-3051 | Spacer, Nut | 2 |
| 5:2:4 | 103-3155 | Axle, Caster | 1 |
| 5:3 | 325-42 | Screw, HH 1/2-13 x 8 | 1 |
| 5:4 | 3296-23 | Nut, Nyloc 1/2-13 | 1 |
| 6 | 103-4882 | Cap-Grease | 1 |
| 7 | 3296-51 | Nut, Nyloc 3/4-10 | 1 |

Exmark red touch up paint (spray paint – P/N 1-850337 - .6 oz liquid bottle – P/N 103-9140).

▲ Use Pro-Lock, Nut Type (P/N 1-840022, .5ml tube) on spacer nut, item 5:2:3.

.

# CASTER WHEEL ASSEMBLY – 60” & 72”

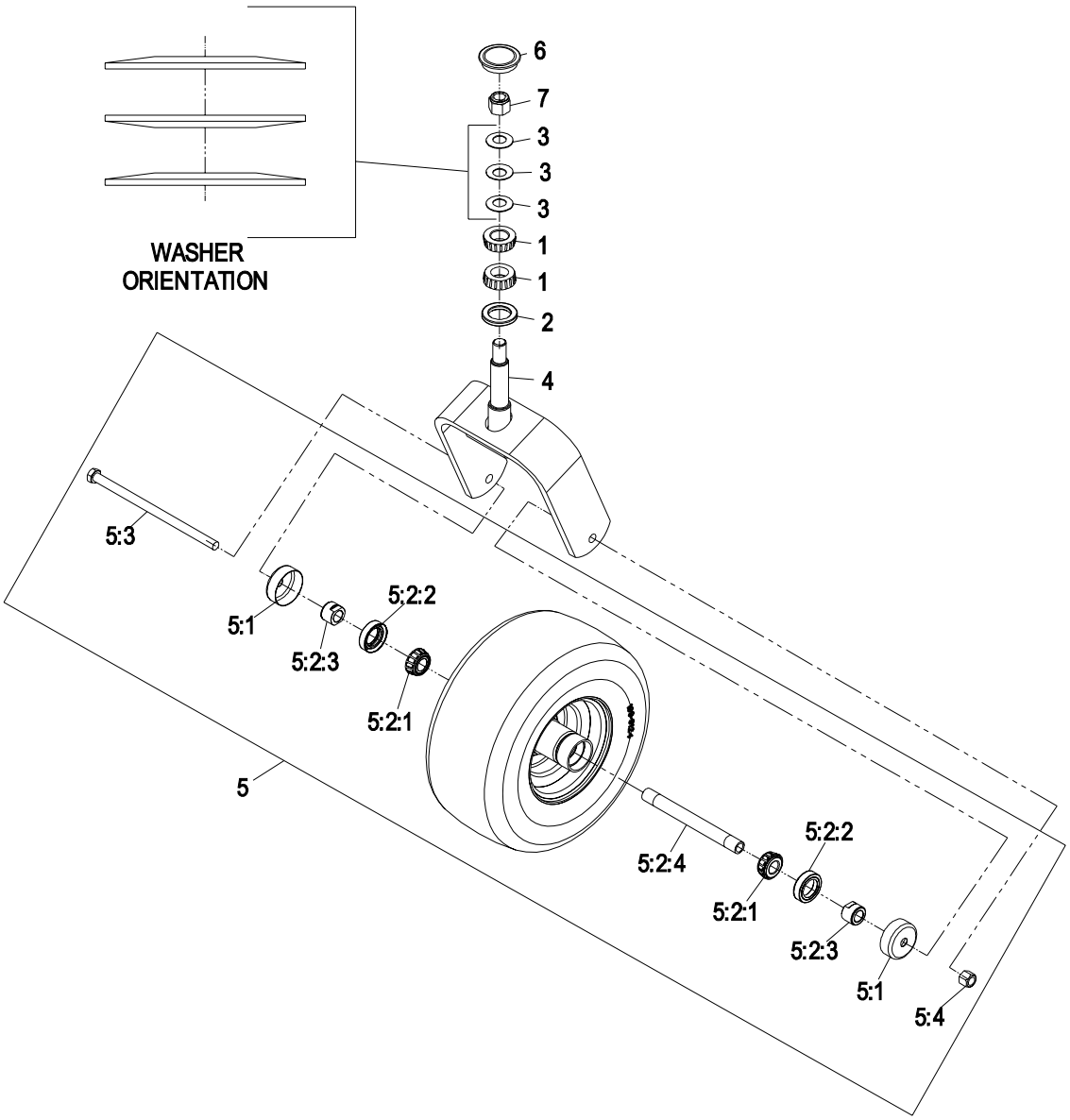


| Item | Part No. | Description | Qty. |
|---|---|---|---|
| 1 | 1-543509 | Cone, Bearing Tapered Roller | 2 |
| 2 | 1-543511 | Seal, Grease | 1 |
| 3 | 1-633508 | Washer, Spring Disc | 3 |
| 4 | 103-1474-01 | Fork-Caster | 1 |
| 5 | 109-9127 | Asm, Wheel And Tire W/Axle | 1 |
| 5:1 | 103-2768 | Guard, Seal | 2 |
| 5:2:1 | 1-633585 | Bearing, Cone Tapered Roller | 2 |

| Item | Part No. | Description | Qty. |
|---|---|---|---|
| 5:2:2 | 103-0063 | Seal, Double Lip | 2 |
| 5:2:3▲ | 103-3051 | Spacer, Nut | 2 |
| 5:2:4 | 103-5156 | Axle, Caster | 1 |
| 5:3 | 325-39 | Screw, HH 1/2-13 x 9 1/2 | 1 |
| 5:4 | 3296-23 | Nut, Nyloc 1/2-13 | 1 |
| 6 | 103-4882 | Cap-Grease | 1 |
| 7 | 3296-51 | Nut, Nyloc 3/4-10 | 1 |

Exmark red touch up paint (spray paint – P/N 1-850337 - .6 oz liquid bottle – P/N 103-9140).

▲ Use Pro-Lock, Nut Type (P/N 1-840022, .5ml tube) on spacer nut, item 5:2:3.

# DECK SUPPORT GROUP

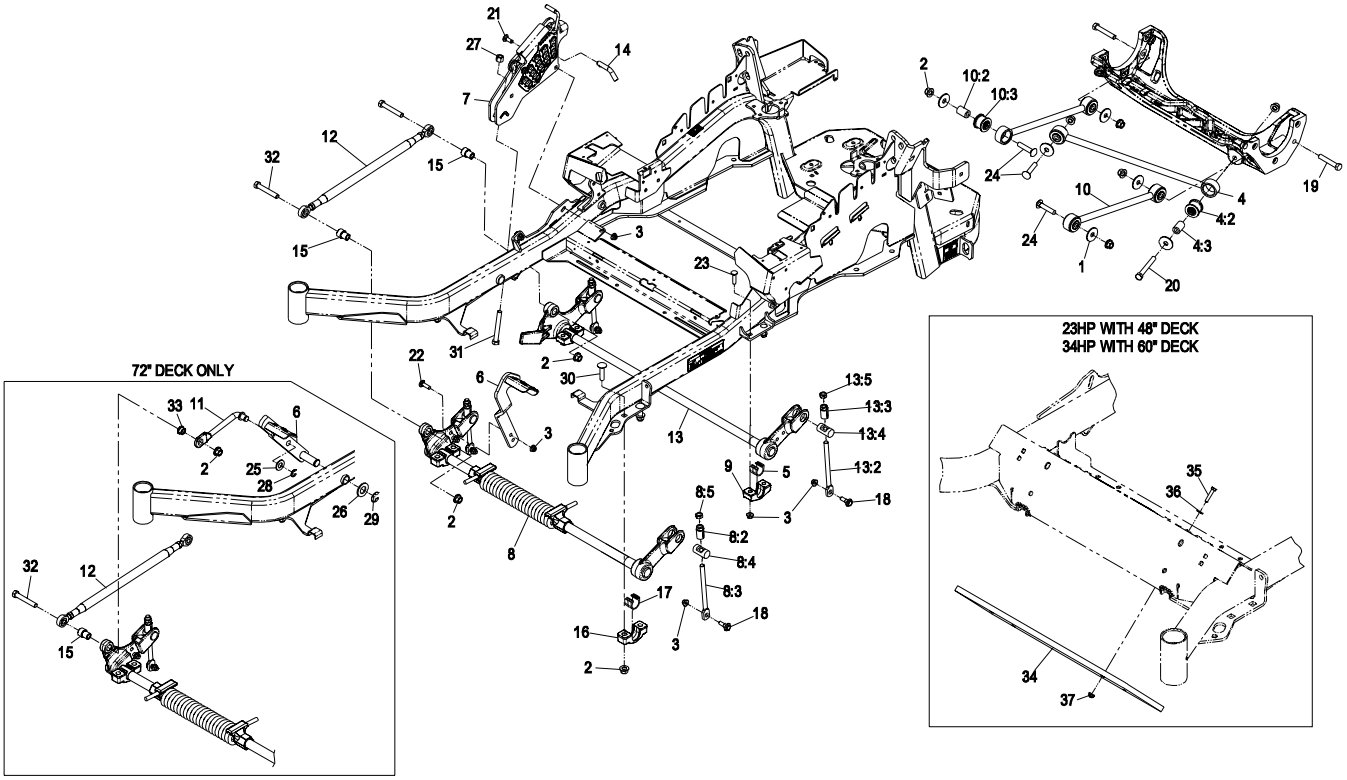


| Item | Part No. | Description | Qty. |
|---|---|---|---|
| 1 | 86-1990 | Washer | 6 |
| 2 | 99-5107 | Nut, Lock 1/2-13 | 12 |
| 3 | 104-8301 | Nut, Nyloc 3/8-16 Flg (48”, 52” & 60”) | 12 |
| | 104-8301 | Nut, Nyloc 3/8-16 Flg (72”) | 10 |
| 4 | 109-5013 | Asm, Panhard Rod | 1 |
| 4:2 | 109-5009 | Bushing, Rubber Suspension | 2 |
| 4:3 | 109-5010 | Spacer | 2 |
| 5 | 109-7173 | Bearing, Cross Shaft Rear | 2 |
| 6 | 109-7202-01 | Wld, Foot Lever (72”) | 1 |
| | 109-8737-01 | Wld, Foot Pedal (48”, 52” & 60”) | 1 |
| 7 | 109-7438 | Asm, Height Of Cut | 1 |
| 8 | 116-0356 | Asm, Deck Lift Front 7/16 (48”& 52”) | 1 |
| | 116-0358 | Asm, Deck Lift Front 1/2 (60” & 72”) | 1 |
| 8:2 | 109-7840 | Adjuster, Deck Lift | 2 |
| 8:3 | 109-8007 | Link, Deck Lift Adjuster | 2 |
| 8:4 | 109-8353 | Trunnion | 2 |
| 8:5 | 3218-5 | Nut-Jam | 2 |
| 9 | 116-0818-03 | Support, Bearing Cross Shaft | 2 |
| 10 | 109-7952 | Asm, Deck Strut | 2 |
| 10:2 | 109-5009 | Bushing, Rubber Suspension | 2 |
| 10:3 | 109-5010 | Spacer | 2 |
| 11 | 109-8004 | Link, Foot Lever (72”) | 1 |
| 12 | 116-0806 | Wld, Side Link | 1 |
| 13 | 116-0362 | Asm, Deck Lift Rear | 1 |
| 13:2 | 109-8007 | Link, Deck Lift Adjuster | 2 |
| 13:3 | 109-7840 | Adjuster, Deck Lift | 2 |
| 13:4 | 109-8353 | Trunnion | 2 |

| Item | Part No. | Description | Qty. |
|---|---|---|---|
| 13:5 | 3218-5 | Nut-Jam | 2 |
| 14 | 109-8757 | Pin, Hoc | 1 |
| 15 | 116-0795 | Bushing, Flange | 2 |
| 16 | 109-9409 | Support, Bearing Cross Shaft Front | 2 |
| 17 | 109-9410 | Liner, Bearing | 2 |
| 18 | 109-9840 | Screw, Hex Flange 3/8-16 x .80 | 4 |
| 19 | 325-12 | Screw, HH 1/2-13 x 3 | 2 |
| 20 | 325-17 | Screw, HH 1/2-13 x 4 | 1 |
| 21 | 3231-2 | Bolt, Carriage 3/8-16 x 1 | 2 |
| 22 | 3231-28 | Bolt, Carriage 3/8-16 x 1 1/4 (48”, 52” & 60”) | 2 |
| 23 | 3231-5 | Bolt, Carriage 3/8-16 x 1 3/4 | 4 |
| 24 | 3233-34 | Bolt, Carriage 1/2-13 x 2 1/2 | 3 |
| 25 | 3256-27 | Washer, 5/8 SAE (72”) | 1 |
| 26 | 3256-29 | Washer, 7/8 SAE (72”) | 1 |
| 27 | 3296-23 | Nut, Nyloc 1/2-13 | 1 |
| 28 | 32120-19 | E-Ring (72”) | 1 |
| 29 | 32151-103 | E-Ring (72”) | 1 |
| 30 | 3233-37 | Screw, Carriage 1/2-13 x 2.5 | 4 |
| 31 | 116-0559 | Bolt, 1/2-13 x 4 | 1 |
| 32 | 325-13 | Screw, HH 1/2-13 x 3 1/4 | 2 |
| 33 | 116-0796 | Bushing, Flange (72”) | 1 |
| 34 | 116-0827-01 | Weight, Toe Board | 1 |
| 35 | 321-8 | Screw, HH 1/4-20 x 1 1/4 | 4 |
| 36 | 3256-22 | Washer, 1/4 SAE | 4 |
| 37 | 104-7201 | Nut, Nyloc 1/4-20 Flg | 4 |

Exmark red touch up paint (spray paint – P/N 1-850337 - .6 oz liquid bottle – P/N 103-9140)

# HEIGHT OF CUT ASSEMBLY – 109-7438

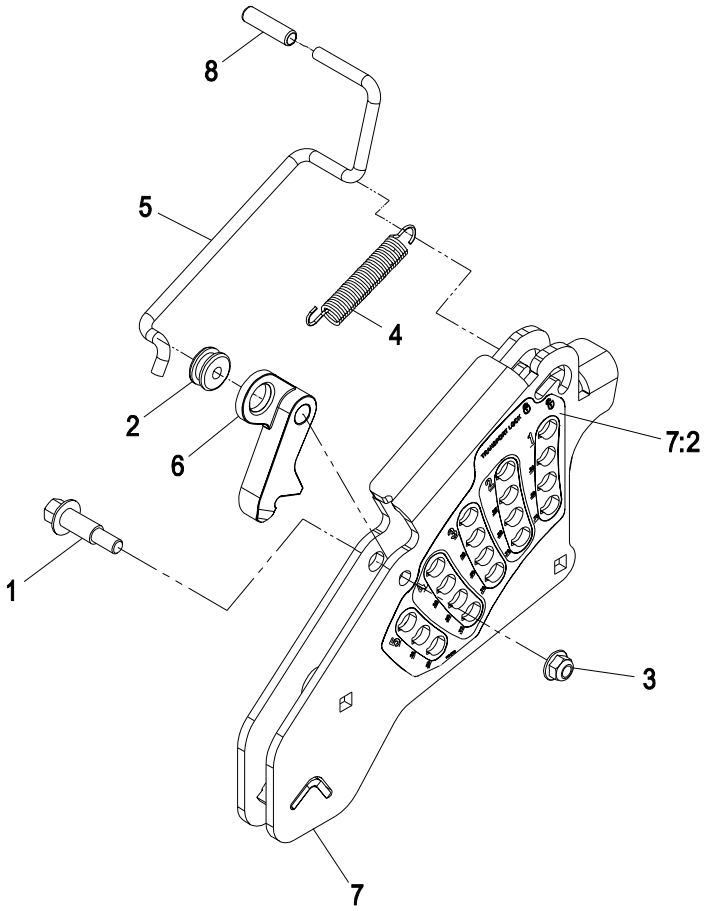


| Item | Part No. | Description | Qty. |
|---|---|---|---|
| 1 | 62-1330 | Bolt-Shoulder | 1 |
| 2 | 109-7130 | Grommet | 1 |
| 3 | 104-8301 | Nut, Nyloc 3/8-16 Flg | 1 |
| 4 | 109-7124 | Spring, Extension | 1 |
| 5 | 109-7128 | Rod, Transport Lock | 1 |

| Item | Part No. | Description | Qty. |
|---|---|---|---|
| 6 | 116-0118 | Pawl, Transfer Lock | 1 |
| 7 | 109-7335 | Asm, Hoc Plate W/Decal | 1 |
| 7:2 | 116-0752 | Decal, Cut Of Height | 1 |
| 8 | 109-8250 | Grip, Lever | 1 |

# CONTROLS GROUP

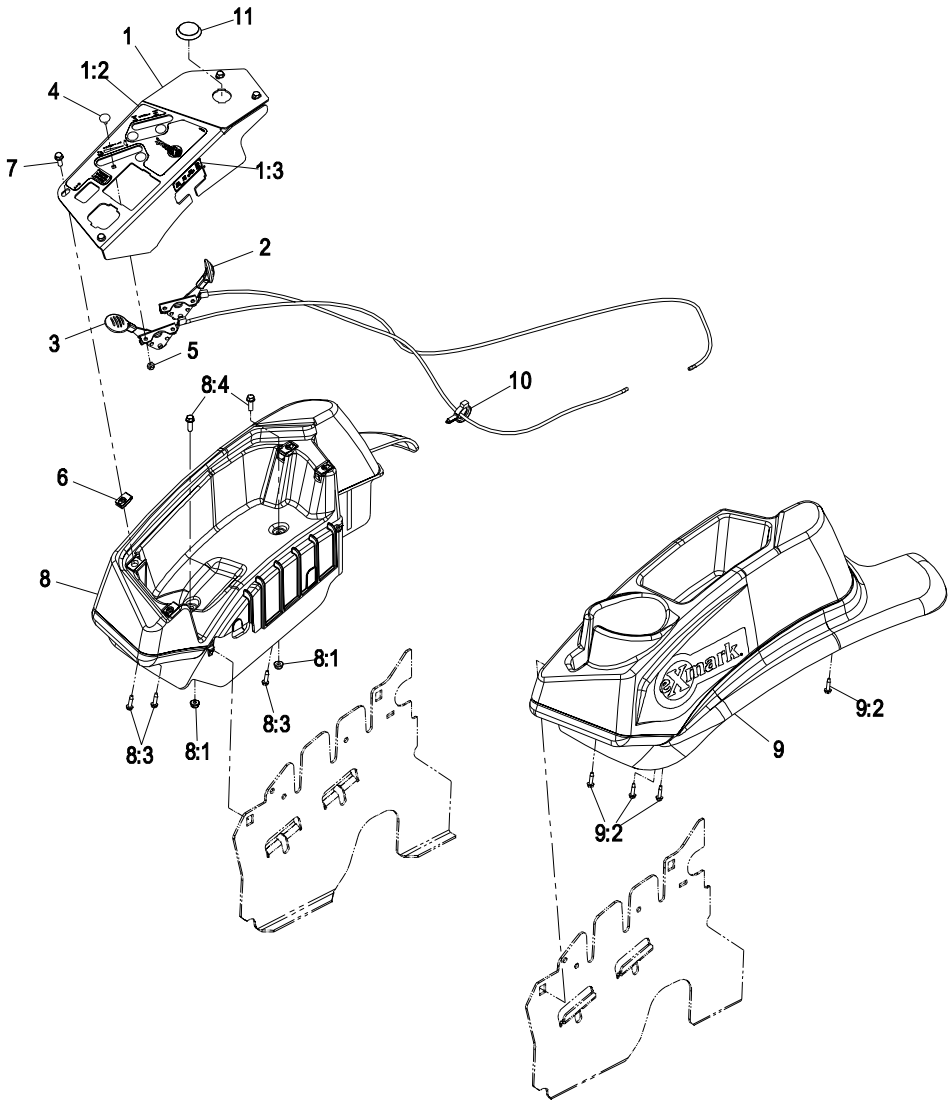


| Item | Part No. | Description | Qty. |
|---|---|---|---|
| 1 | 109-8484 | Console, Panel W/Decal | 1 |
| 1:2 | 109-8483 | Decal, Control Panel | 1 |
| 1:3 | 109-7330 | Decal, Fuse | 1 |
| 2 | 109-4601 | Asm, Choke Cable (34HP Kawasaki) | 1 |
| | 109-8165 | Asm, Choke Cable (Kohler) | 1 |
| | 109-8167 | Asm, Choke Cable (29HP Kawasaki) | 1 |
| 3 | 109-4602 | Asm, Throttle Cable (34HP Kawasaki) | 1 |
| | 116-0969 | Asm, Throttle Cable (All Units except 34HP Kawasaki) | 1 |
| 4 | 1-807513 | Bolt, Carriage #10-24 x 1/2 | 4 |
| 5 | 3296-2 | Nut, Nyloc #10-24 | 4 |

| Item | Part No. | Description | Qty. |
|---|---|---|---|
| 6 | 107069 | Clip | 4 |
| 7 | 32105-15 | Screw, Machine 1/4-20 x 3/4 | 4 |
| 8 | 109-9341 | Console, RH Narrow Asm | 1 |
| 8:1 | 104-7201 | Nut, Nyloc 1/4-20 Flg | 2 |
| 8:3 | 109-9345 | Screw, HWH #10-14 x 3/4 TF | 3 |
| 8:4 | 32105-15 | Screw | 2 |
| 9 | 109-9342 | Console.LH Narrow Asm | 1 |
| 9:2 | 109-9345 | Screw, HWH #10-14 x 3/4 TF | 4 |
| 10 | 105-1853 | Clamp, Hose | 1 |
| 11 | 109-9445 | Plug, Plastic | 1 |

# MOTION CONTROL GROUP

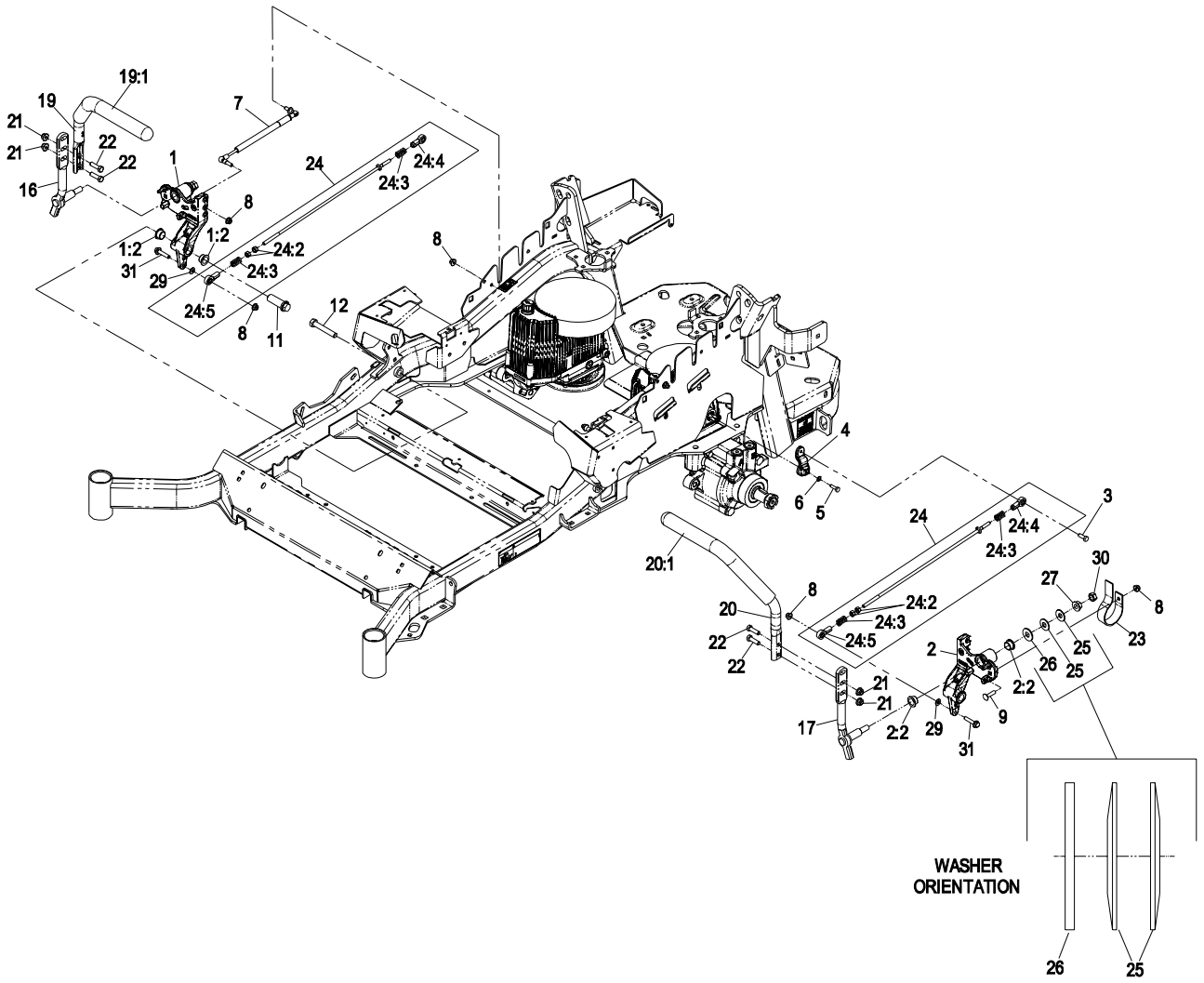


| Item | Part No. | Description | Qty. |
|---|---|---|---|
| 1 | 116-0880 | Asm, Mot Ctrl/Bushing RH | 1 |
| 1:2 | 109-8054 | Bushing, Flanged | 4 |
| 2 | 116-0881 | Asm, Mot Ctrl/Bushing LH | 1 |
| 2:2 | 109-8054 | Bushing, Flanged | 4 |
| 3▲ | 116-0648 | Screw, HH 5/16-18 x 1 W/Patch | 2 |
| 4 | 109-4581 | Arm, Pump Control | 2 |
| 5▲ | 9080046 | Screw, HH 1/4-20 x 7/8 | 2 |
| 6 | 1-303435 | Washer, Spring Disc 1/4 | 2 |
| 7 | 116-0027 | Damper, Motion Control | 2 |
| 8 | 104-8300 | Nut, Nyloc 5/16-18 Flg | 8 |
| 9 | 3230-2 | Bolt, Carriage 5/16-18 x 1 | 2 |
| 11 | 109-5891 | Hub, Threaded | 2 |
| 12 | 325-12 | Screw, HH 1/2-13 x 3 | 2 |
| 16 | 116-0039 | Lever, Motion Control RH | 1 |
| 17 | 116-0040 | Lever, Motion Control LH | 1 |
| 19 | 109-6589 | Asm, Steering Handle RH | 1 |
| 19:1 | 109-5668 | Grip, Control Lever | 1 |

| Item | Part No. | Description | Qty. |
|---|---|---|---|
| 20 | 109-6590 | Asm, Steering Handle LH | 1 |
| 20:1 | 109-5668 | Grip, Control Lever | 1 |
| 21 | 104-8301 | Nut, Nyloc 3/8-16 Flg | 4 |
| 22 | 323-7 | Screw, HH 3/8-16 x 1 1/4 | 4 |
| 23 | 109-5575 | Spring, Leaf Rtn | 2 |
| 24 | 109-8106 | Asm, Pump Linkage Front (60” & 72”) | 2 |
| | 109-8107 | Asm, Pump Linkage Rear (48” & 52”) | 2 |
| 24:2 | 3219-2 | Nut, Hex 5/16-24 | 2 |
| 24:3 | 1-323245 | Spring, Compression | 2 |
| 24:4 | 1-633152 | Balljoint | 1 |
| 24:5 | 1-543017 | Balljoint | 1 |
| 25 | 109-9505 | Washer, Spring Disc 1/2 | 4 |
| 26 | 3256-6 | Washer | 2 |
| 27 | 32128-56 | Nut, Hex 1/2-13 Flange | 2 |
| 29 | 3256-23 | Washer | 2 |
| 30 | 3218-5 | Nut, Jam 1/2-13 | 2 |
| 31 | 115-1794 | Screw, Hex Flange 5/16-18 x 1 1/2 | 2 |

▲ Use Pro-Lock, Nut Type (P/N 1-840022, .5ml tube).

# PARK BRAKE GROUP

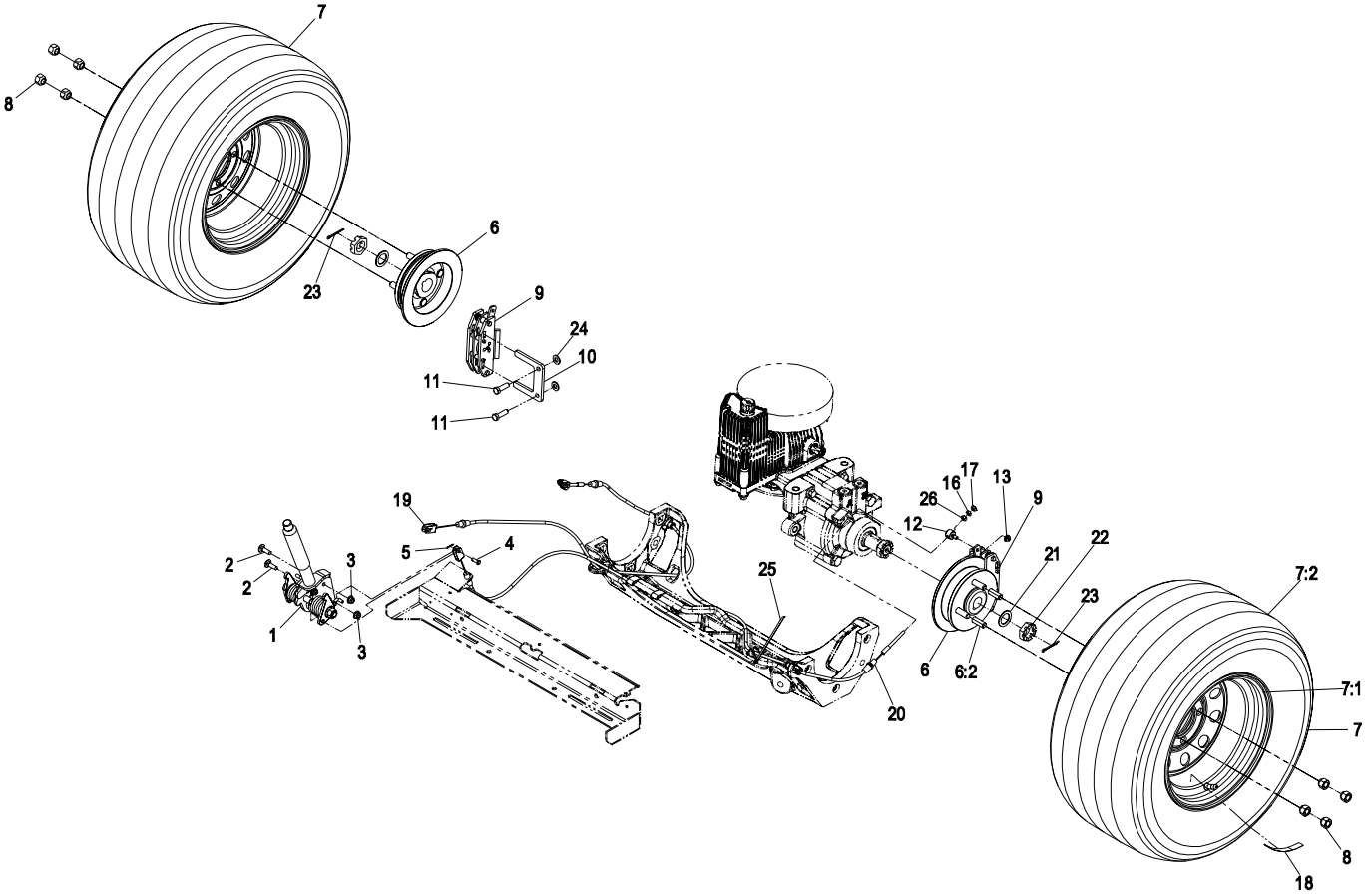


| Item | Part No. | Description | Qty. |
|---|---|---|---|
| 1 | 117-0383 | Asm, Brake Handle | 1 |
| 2 | 3230-2 | Bolt, Carriage 5/16-18 x 1 | 2 |
| 3 | 104-8300 | Nut, Nyloc 5/16-18 Flg | 2 |
| 4 | 60-1730 | Pin-Clevis | 2 |
| 5 | 3272-1 | Pin, Cotter 1/16 x 1/2 | 2 |
| 6 | 115-3624 | Wheel Hub And Stud Asm | 2 |
| 6:2 | 1-633926 | Stud-Wheel | 4 |
| 7 | 109-3050 | Asm, Wheel & Tire (48”) | 2 |
| | 109-3247 | Asm, Wheel & Tire (52”) | 2 |
| | 109-3248 | Asm, Wheel & Tire (60”) | 2 |
| | 109-3158 | Asm, Wheel & Tire (72”) | 2 |
| 7:1 | 109-3645 | Wheel (48”) | 1 |
| | 109-2875 | Wheel (52”) | 1 |
| | 109-2871 | Wheel (60”) | 1 |
| | 109-3156 | Wheel (72”) | 1 |
| 7:2 | 103-2771 | Tire (48” & 52”) | 1 |
| | 103-2744 | Tire (60” & 72”) | 1 |

| Item | Part No. | Description | Qty. |
|---|---|---|---|
| 8 | 242-50 | Nut, Lug 1/2-20 | 8 |
| 9 | 109-2889 | Caliper-Brake | 2 |
| 10 | 109-0958 | Plate, Brake Mount | 2 |
| 11 | 323-7 | Screw, HH 3/8-16 x 1 1/4 | 4 |
| 12 | 112-8379 | Swivel | 2 |
| 13 | 104-7201 | Nut, Nyloc 1/4-20 Flg | 2 |
| 16 | 3220-1 | Nut, Jam 1/4-28 | 2 |
| 17 | 3296-13 | Nut, Nyloc 1/4-28 | 2 |
| 18 | 116-0165 | Decal, Wheel Hub, Slotted Nut | 2 |
| 19 | 115-3584 | Cable | 1 |
| 20 | 115-3585 | Cable | 1 |
| 21 | 1-523157 | Washer | 2 |
| 22 | 1-809036 | Nut, Slotted 1-20 | 2 |
| 23 | 1-806800 | Pin, Cotter 9/64 x 1 1/2 | 2 |
| 24 | 3256-24 | Washer, 3/8 SAE | 4 |
| 25 | 116-0940 | Tie | 2 |
| 26 | 3219-1 | Nut, Hex 1/4-28 | 2 |

# BRAKE HANDLE ASSEMBLY – 117-0383

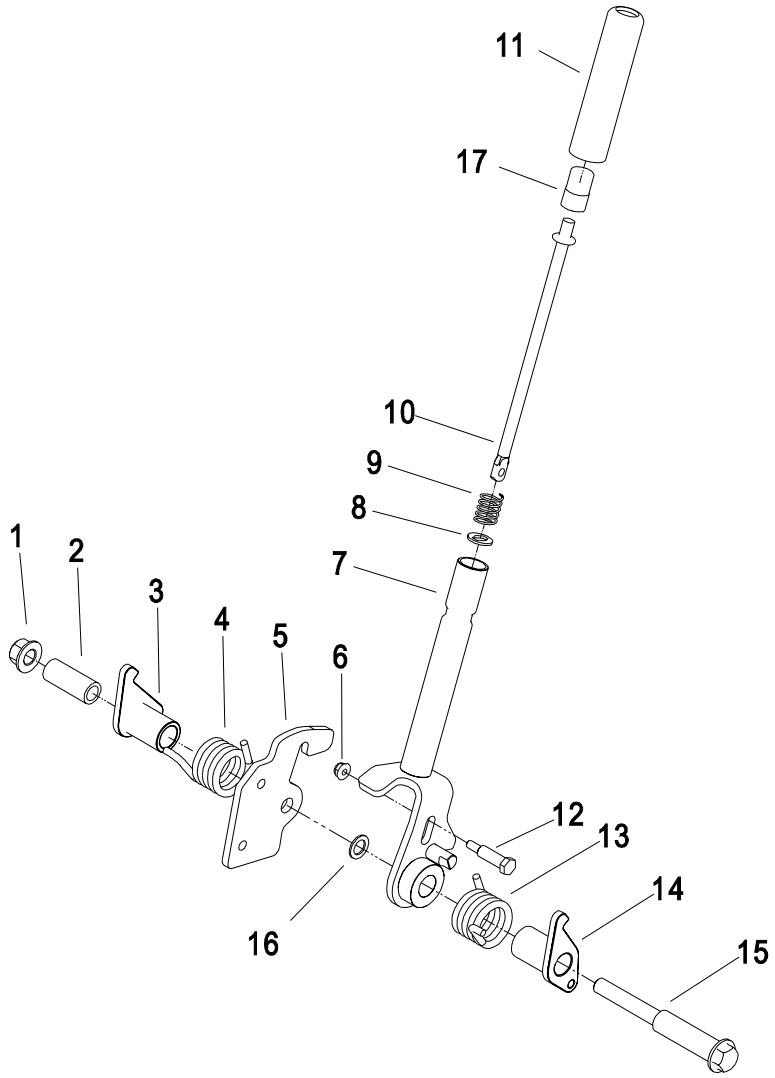


| Item | Part No. | Description | Qty. |
|---|---|---|---|
| 1 | 99-5107 | Nut, Lock 1/2-13 | 1 |
| 2 | 117-0380 | Spacer | 1 |
| 3 | 115-3580 | Arm, Brake LH | 1 |
| 4 | 117-0376 | Spring Torsion RH | 1 |
| 5 | 115-3574 | Plate-Latch | 1 |
| 6 | 104-7201 | Nut, Nyloc 1/4-20 Flg | 1 |
| 7 | 117-0382-03 | Brake Handle Asm | 1 |
| 8 | 114-1207 | Washer, Special | 1 |
| 9 | 114-8187 | Spring-Compression | 1 |

| Item | Part No. | Description | Qty. |
|---|---|---|---|
| 10 | 115-3581 | Rod-Brake Release | 1 |
| 11 | 115-3592 | Grip 1.0 In | 1 |
| 12 | 112-8387 | Bolt, HH Shoulder 1/4-20 x 1.64 | 1 |
| 13 | 117-0375 | Spring Torsion LH | 1 |
| 14 | 115-3579 | Arm, Brake RH | 1 |
| 15 | 117-0379 | Bolt, Shoulder 1/2-13 x 5.57 | 1 |
| 16 | 117-0378 | Washer | 1 |
| 17 | 115-2750 | Knob | 1 |

Exmark black touch up spray paint – gloss black.

# SEAT GROUP

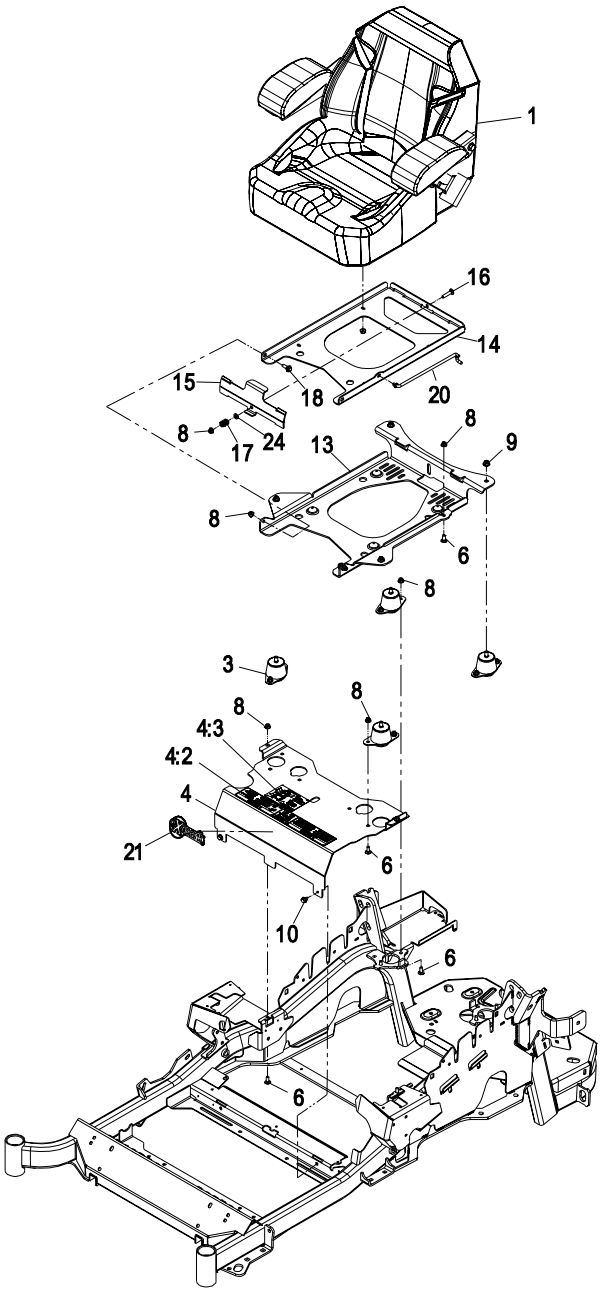


| Item | Part No. | Description | Qty. |
|---|---|---|---|
| 1 | 116-0036 | Asm, Seat W/Tracks | 1 |
| 3 | 109-9034 | Seat Isolator | 4 |
| 4 | 109-9036 | Mount, Seat W/Decals | 1 |
| 4:2 | 109-7069 | Decal, Console | 1 |
| 4:3 | 116-0211 | Decal, Service Lz | 1 |
| 6 | 3230-23 | Bolt, Carriage 5/16-18 x 3/4, short neck | 11 |
| 8 | 104-8300 | Nut, Nyloc 5/16-18 Flg | 18 |
| 9 | 104-8301 | Nut, Nyloc 3/8-16 Flg | 4 |
| 10 | 9266934 | Screw, HWH 5/16 x 1/2 TF | 2 |

| Item | Part No. | Description | Qty. |
|---|---|---|---|
| 13 | 116-0181-03 | Plate, Seat Support | 1 |
| 14 | 116-0179-03 | Plate, Seat Base | 1 |
| 15 | 109-9881-03 | Plate, Seat Latch | 1 |
| 16 | 3230-4 | Bolt, Carriage 5/16-18 x 1 1/2 | 1 |
| 17 | 107-3017 | Spring-Compression | 1 |
| 18 | 99-5284 | Screw-Shoulder | 2 |
| 20 | 116-0070 | Rod, Prop | 1 |
| 21 | 103-2883 | Decal, Exmark Logo | 1 |
| 24 | 3256-23 | Washer, 5/16 SAE | 1 |

Exmark black touch up spray paint – gloss black

# SEAT W/TRACKS ASSEMBLY – 116-0036

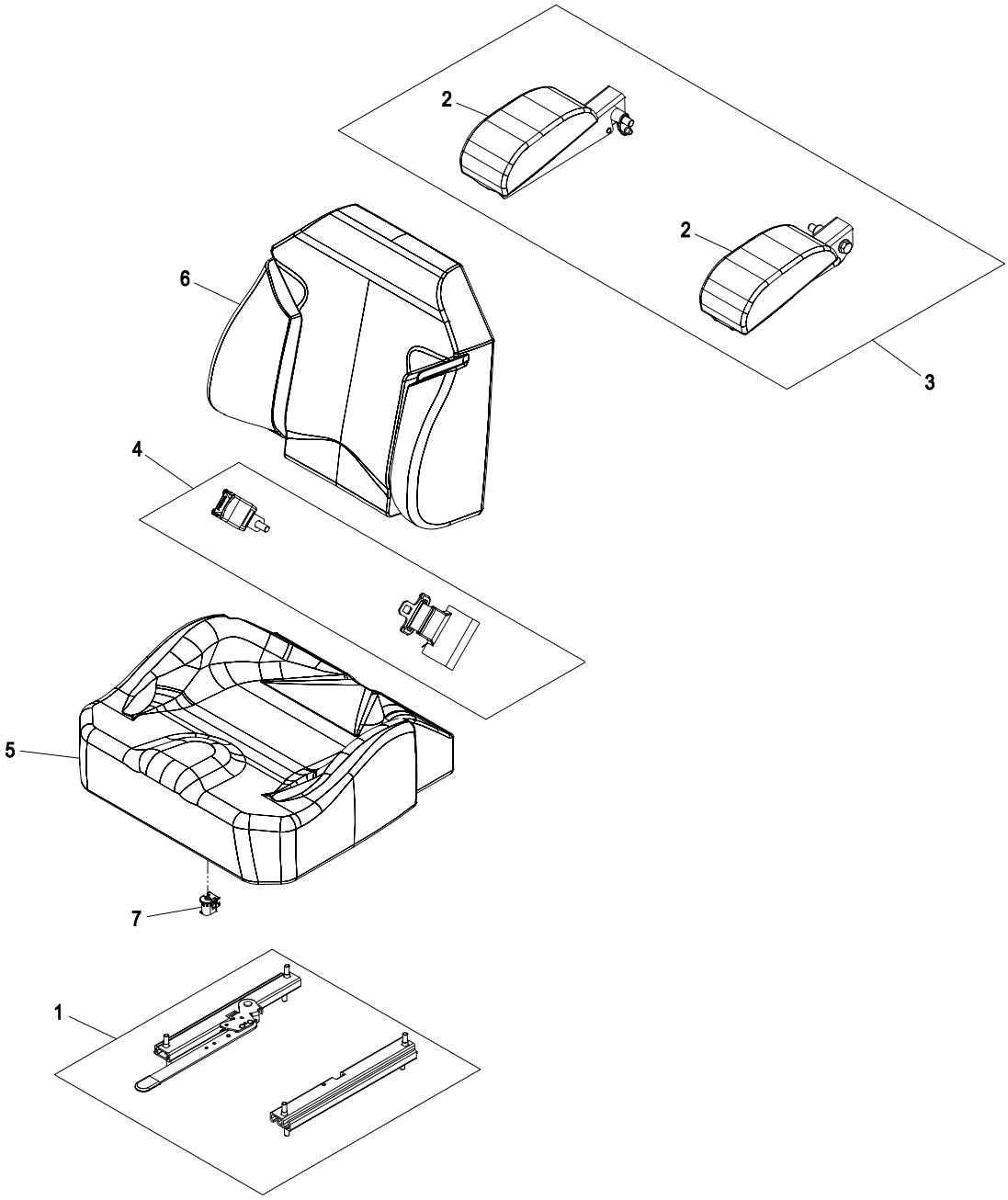


| Item | Part No. | Description | Qty. |
|---|---|---|---|
| 1 | 109-9801 | Set, Seat Track | 1 |
| 2 | 109-9812 | Set, Arm Rest Pads | 1 |
| 3 | 109-9815 | Kit, Arm Rest Set | 1 |
| 4 | 116-0751 | Kit, Seat Belt (short buckle) | 1 |

| Item | Part No. | Description | Qty. |
|---|---|---|---|
| 5 | 109-9807 | Cover, Cushion | 1 |
| 6 | 109-9817 | Cover, Back | 1 |
| 7 | 82-2190 | Switch, Occupancy | 1 |

# FUEL TANK GROUP

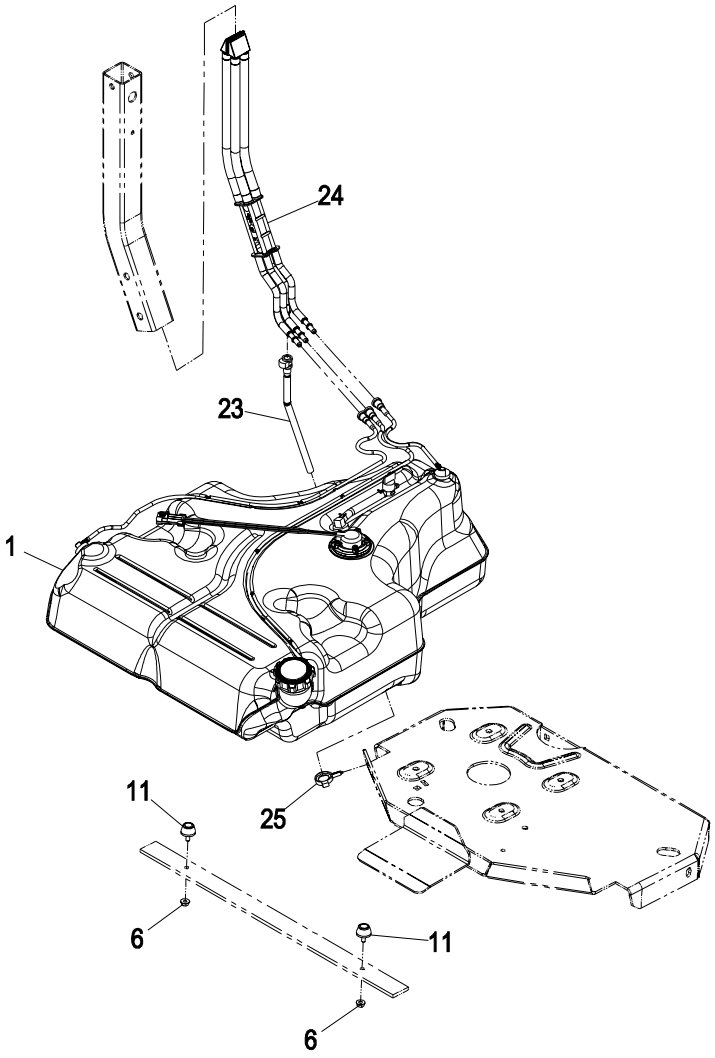


| Item | Part No. | Description | Qty. |
|---|---|---|---|
| 1 | 109-9357 | Asm, Fuel Tank | 1 |
| | 109-9656 | Asm, Fuel Tank W/O Sender | 1 |
| 6 | 32128-33 | Nut, Whizlock 1/4-20 | 2 |
| 11 | 109-2365 | Bumper-Rubber (W/Stud) | 2 |

| Item | Part No. | Description | Qty. |
|---|---|---|---|
| 23 | 109-9450 | Tube, Fuel Vent Drain | 1 |
| 24 | 109-9491 | Asm, Fuel Manifold Vent | 1 |
| 25 | 105-1853 | Clamp, Hose | 1 |

# FUEL TANK ASSEMBLY – 109-9357 & 109-9656

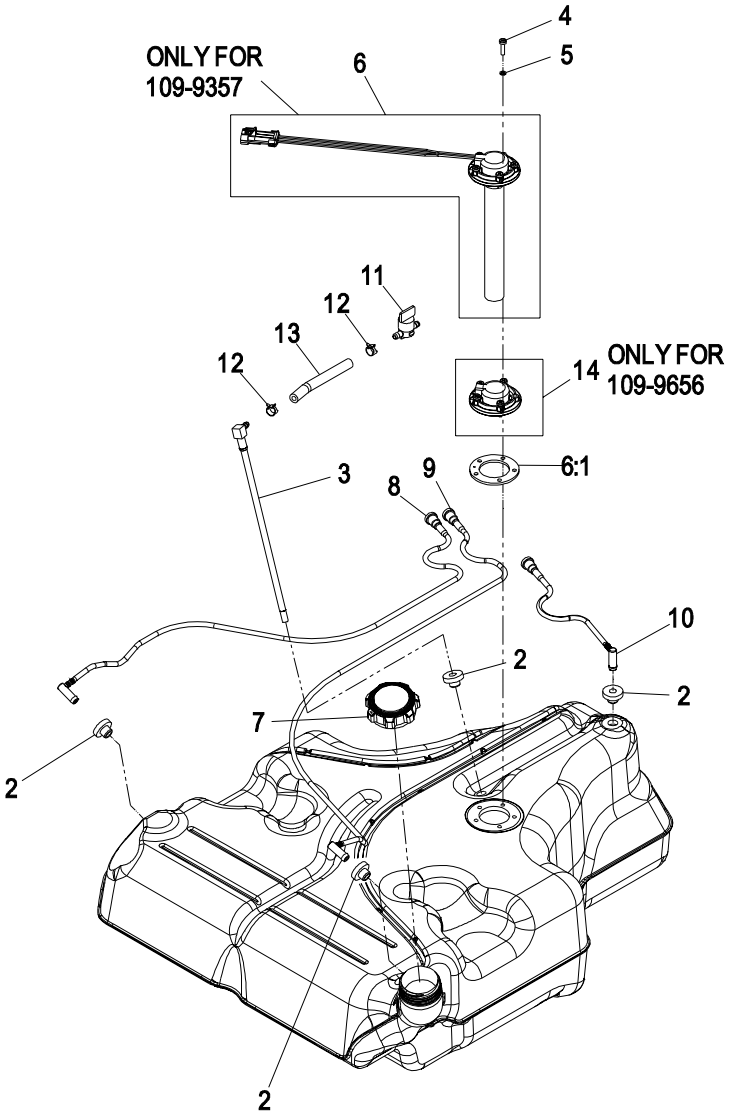


| Item | Part No. | Description | Qty. |
|---|---|---|---|
| 2 | 46-6560 | Bushing | 4 |
| 3 | 109-9364 | Fitting, Fuel W/Line And Screen | 1 |
| 4 | 9107944 | Screw-Pan | 5 |
| 5 | 3253-17 | Washer, Lock 3/16 | 5 |
| 6 | 116-0003 | Sender, Fuel Level W/Gasket & Tube (109-9357 only) | 1 |
| 6:1 | 109-9620 | Gasket | 1 |
| 7 | 109-9619 | Cap, Fuel | 1 |

| Item | Part No. | Description | Qty. |
|---|---|---|---|
| 8 | 109-9447 | Tube, RH Vent | 1 |
| 9 | 109-9448 | Tube, LH Vent | 1 |
| 10 | 109-9449 | Tube, Rear Vent | 1 |
| 11 | 1-603770 | Valve, Fuel | 1 |
| 12 | 2412-98 | Clamp, Hose | 2 |
| 13 | 109-0650 | Hose-Fuel | 1 |
| 14 | 109-9678 | Cover, Plastic Fuel Tank (109-9656 only) | 1 |

# ENGINE GROUP – 23HP KAWASAKI

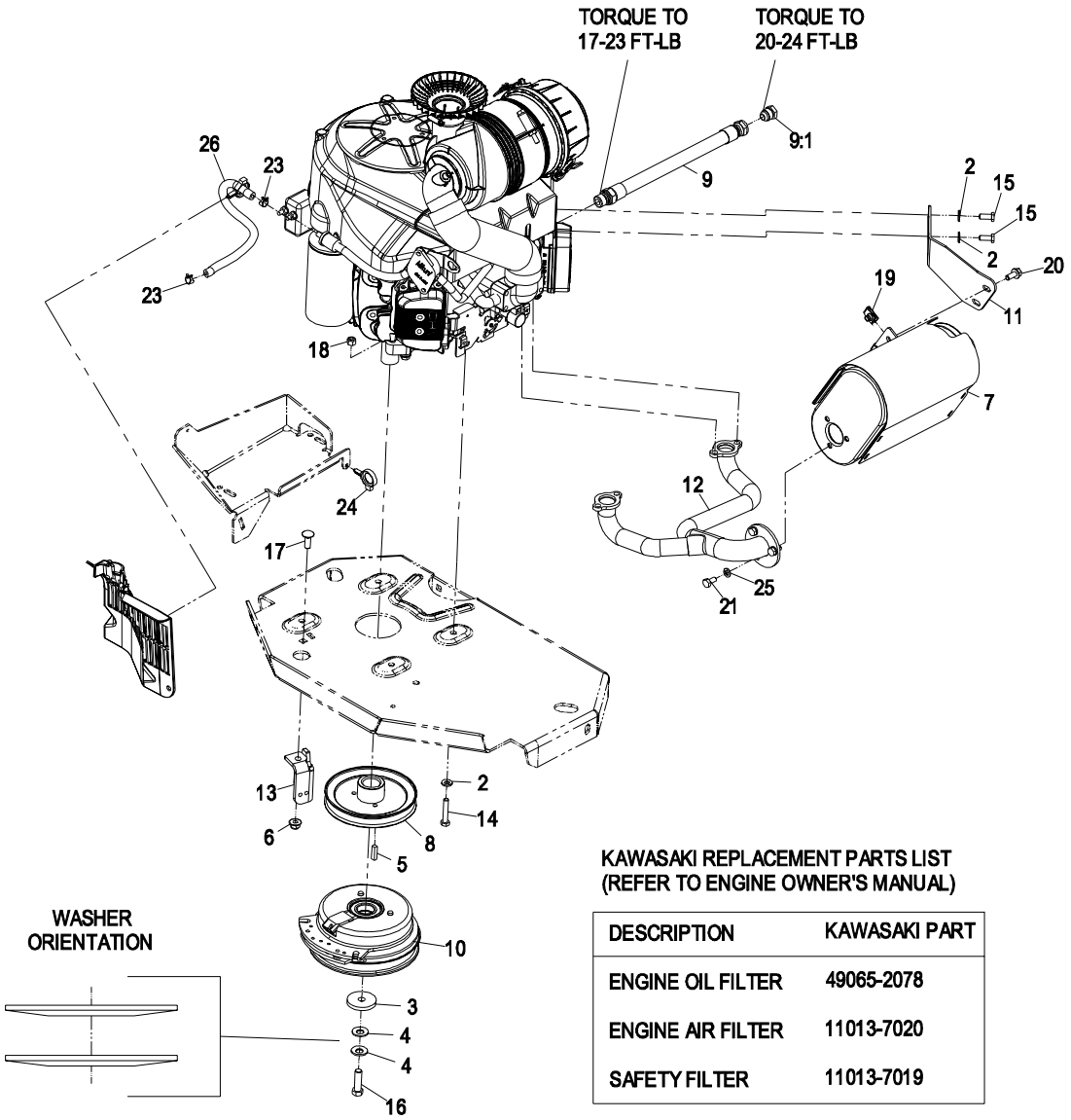


**KAWASAKI REPLACEMENT PARTS LIST**
**(REFER TO ENGINE OWNER'S MANUAL)**

| DESCRIPTION | KAWASAKI PART |
|---|---|
| ENGINE OIL FILTER | 49065-2078 |
| ENGINE AIR FILTER | 11013-7020 |
| SAFETY FILTER | 11013-7019 |

| Item | Part No. | Description | Qty. |
|---|---|---|---|
| 2 | 1-303334 | Washer, Spring Disc 5/16 | 6 |
| 3 | 109-6919 | Washer, Clutch | 1 |
| 4 | 1-603610 | Washer, Spring Disc 7/16 | 2 |
| 5 | 1-807259 | Key, Machine 1/4 x 1/4 x 1 | 1 |
| 6 | 104-8301 | Nut, Nyloc 3/8-16 Flg | 1 |
| 7 | 109-9280 | Muffler | 1 |
| 8 | 109-9905 | Sheave, W/Hub | 1 |
| 9 | 109-4490 | Asm, Hose Oil Drain W/Plug | 1 |
| 9:2 | 109-1012 | Plug | 1 |
| 10 | 116-1604 | Clutch, CMS-200 W/Spot Brake | 1 |
| 11 | 109-9254 | Bracket, Muffler | 1 |
| 12 | 109-9251 | Manifold, Exhaust | 1 |
| 13 | 109-8138-01 | Anchor, Clutch | 1 |

| Item | Part No. | Description | Qty. |
|---|---|---|---|
| 14 | 322-9 | Screw, HH 5/16-18 x 1 3/4 | 4 |
| 15 | 33114-020 | Screw, HH M8-1.25 x 20mm | 2 |
| 16▲ | 109-9761 | Screw, HH 7/16-20 x 1 1/2 W/Loctite | 1 |
| 17 | 3231-22 | Bolt, Carriage 3/8-16 x 1 | 1 |
| 18 | 3296-29 | Nut, Nyloc 5/16-18 | 4 |
| 19 | 94-2413 | U-Nut 5/16-18 | 2 |
| 20 | 3234-5 | Screw, HH FLG 5/16-18 x 3/4 | 2 |
| 21 | 322-2 | Screw, HH 5/16-18 x 5/8 | 3 |
| 23 | 2412-98 | Clamp, Hose | 2 |
| 24 | 105-1853 | Clamp-Hose, Hydro | 1 |
| 25 | 3253-4 | Washer, Lock 5/16 | 3 |
| 26 | 109-0296 | Hose, Fuel 15” | 1 |

Exmark red touch up paint (spray paint – P/N 1-850337 - .6 oz liquid bottle – P/N 103-9140)

▲ Use Pro-Lock, Nut Type (P/N 1-840022, .5ml tube) on clutch bolt.

# ENGINE GROUP – 23-27HP KOHLER

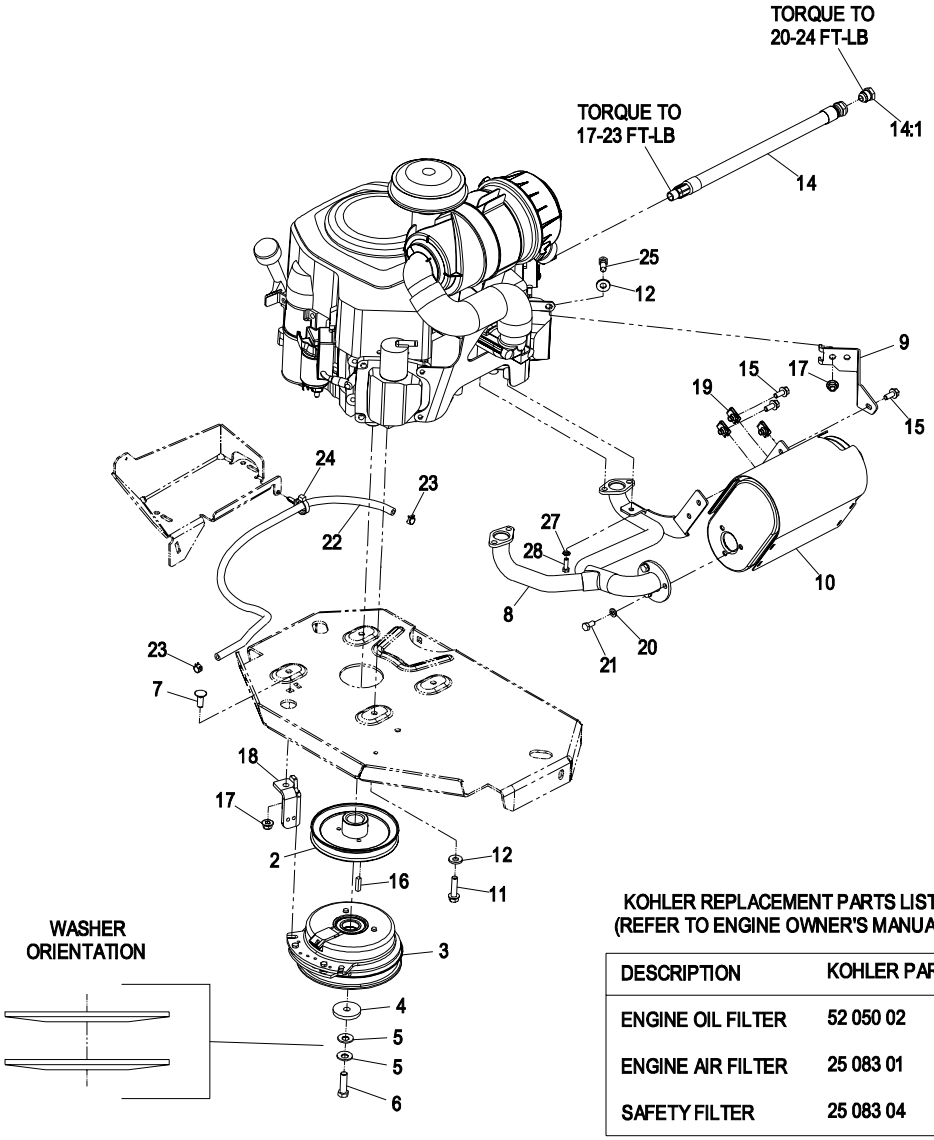


KOHLER REPLACEMENT PARTS LIST
(REFER TO ENGINE OWNER'S MANUAL)

| DESCRIPTION | KOHLER PART |
|---|---|
| ENGINE OIL FILTER | 52 050 02 |
| ENGINE AIR FILTER | 25 083 01 |
| SAFETY FILTER | 25 083 04 |

| Item | Part No. | Description | Qty. |
|---|---|---|---|
| 2 | 109-9905 | Sheave, W/Hub | 1 |
| 3 | 109-9282 | Clutch, CMS-200 W/Spot Brake | 1 |
| 4 | 109-6919 | Washer, Clutch | 1 |
| 5 | 1-603610 | Washer, Spring Disc 7/16 | 2 |
| 6▲ | 109-9761 | Screw, HH 7/16-20 x 1 1/2 W/Loctite | 1 |
| 7 | 3231-22 | Bolt, Carriage 3/8-16 x 1 | 1 |
| 8 | 116-0807 | Manifold, Exhaust | 1 |
| 9 | 109-9230 | Bracket, Muffler | 1 |
| 10 | 109-9280 | Muffler | 1 |
| 11 | 32144-102 | Screw, HWH 3/8-16 X 1 1/2 Taptite | 4 |
| 12 | 98-5975 | Washer, Spring Disc 3/8 | 5 |
| 14✚ | 116-0013 | Asm, Oil Drain Hose With Plug | 1 |
| 14:1 | 109-1012 | Plug | 1 |

| Item | Part No. | Description | Qty. |
|---|---|---|---|
| 15 | 3234-5 | Screw, HH FLG 5/16-18 x 3/4 | 3 |
| 16 | 1-807259 | Key, Machine 1/4 x 1/4 x 1 | 1 |
| 17 | 104-8301 | Nut, Nyloc 3/8-16 Flg | 2 |
| 18 | 109-8138-01 | Anchor, Clutch | 1 |
| 19 | 94-2413 | U-Nut | 3 |
| 20 | 3253-4 | Washer, Lock 5/16 | 3 |
| 21 | 322-2 | Screw, HH 5/16-18 x 5/8 | 3 |
| 22 | 109-0286 | Hose, Fuel Line 35" | 1 |
| 23 | 2412-98 | Clamp, Hose | 2 |
| 24 | 105-1853 | Clamp, Hose | 1 |
| 25 | 323-5 | Screw, HH 3/8-16 X 7/8 | 1 |
| 27 | 1-303435 | Washer, Spring Disc 1/4 | 1 |
| 28 | 33113-020 | Screw, HH M6-1 x 12mm | 1 |

Exmark red touch up paint (spray paint – P/N 1-850337 - .6 oz liquid bottle – P/N 103-9140)

✚ Use Teflon Pipe Sealant or equivalent on threads.

▲ Use Pro-Lock, Nut Type (P/N 1-840022, .5ml tube) on clutch bolt.

# ENGINE GROUP – 29HP KAWASAKI

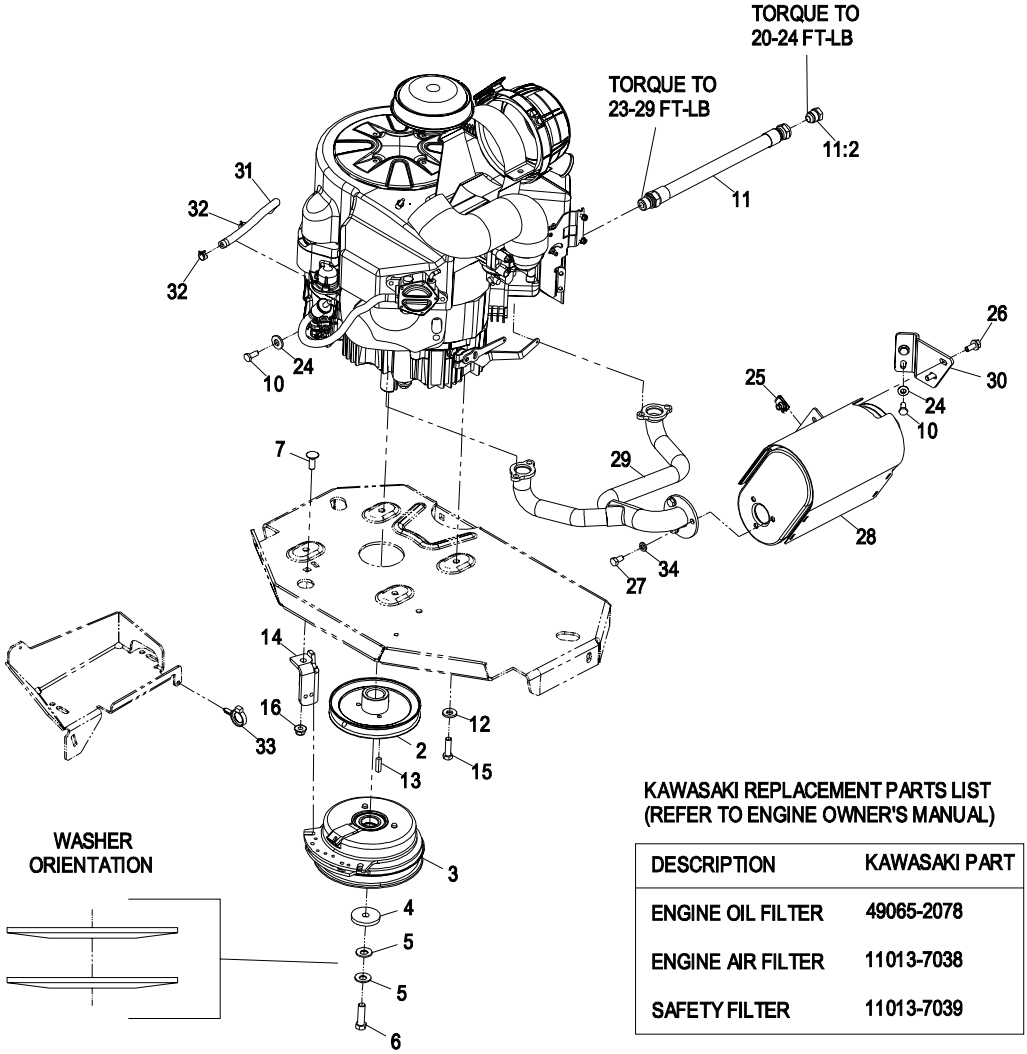


KAWASAKI REPLACEMENT PARTS LIST
(REFER TO ENGINE OWNER'S MANUAL)

| DESCRIPTION | KAWASAKI PART |
|---|---|
| ENGINE OIL FILTER | 49065-2078 |
| ENGINE AIR FILTER | 11013-7038 |
| SAFETY FILTER | 11013-7039 |

| Item | Part No. | Description | Qty. |
|---|---|---|---|
| 2 | 109-9905 | Sheave, W/Hub | 1 |
| 3 | 109-9282 | Clutch, CMS-200 W/Spot Brake | 1 |
| 4 | 109-6919 | Washer, Clutch | 1 |
| 5 | 1-603610 | Washer, Spring Disc 7/16 | 2 |
| 6▲ | 109-9761 | Screw, HH 7/16-20 x 1 1/2 W/Loctite | 1 |
| 7 | 3231-22 | Bolt, Carriage 3/8-16 x 1 | 1 |
| 10 | 33114-020 | Screw, HH M8-1.25 x 20mm | 3 |
| 11 | 109-4490 | Asm, Hose-Oil Drain W/Plug | 1 |
| 11:2 | 109-1012 | Plug | 1 |
| 12 | 98-5975 | Washer, Spring Disc 3/8 | 4 |
| 13 | 1-807259 | Key, Machine 1/4 x 1/4 x 1 | 1 |
| 14 | 109-8138-01 | Anchor, Clutch | 1 |
| 15 | 323-7 | Screw, HH 3/8-16 x 1 1/4 | 4 |

| Item | Part No. | Description | Qty. |
|---|---|---|---|
| 16 | 104-8301 | Nut, Nyloc 3/8-16 Flg | 1 |
| 24 | 1-303334 | Washer, Spring Disc 5/16 | 3 |
| 25 | 94-2413 | U-Nut | 2 |
| 26 | 3234-5 | Screw, HH FLG 5/16-18 x 3/4 | 2 |
| 27 | 322-2 | Screw, HH 5/16-18 x 5/8 | 3 |
| 28 | 109-9280 | Muffler, Small Engine | 1 |
| 29 | 109-9250 | Manifold, Exhaust | 1 |
| 30 | 116-0203 | Bracket, Muffler | 1 |
| 31 | 109-0296 | Hose, Fuel Line 15" | 1 |
| 32 | 2412-98 | Clamp, Hose | 2 |
| 33 | 105-1853 | Clamp, Hose | 1 |
| 34 | 3253-4 | Washer, Lock 5/16 | 3 |

Exmark red touch up paint (spray paint – P/N 1-850337 - .6 oz liquid bottle – P/N 103-9140)

▲ Use Pro-Lock, Nut Type (P/N 1-840022, .5ml tube) on clutch bolt.

# ENGINE GROUP – 34HP KAWASAKI

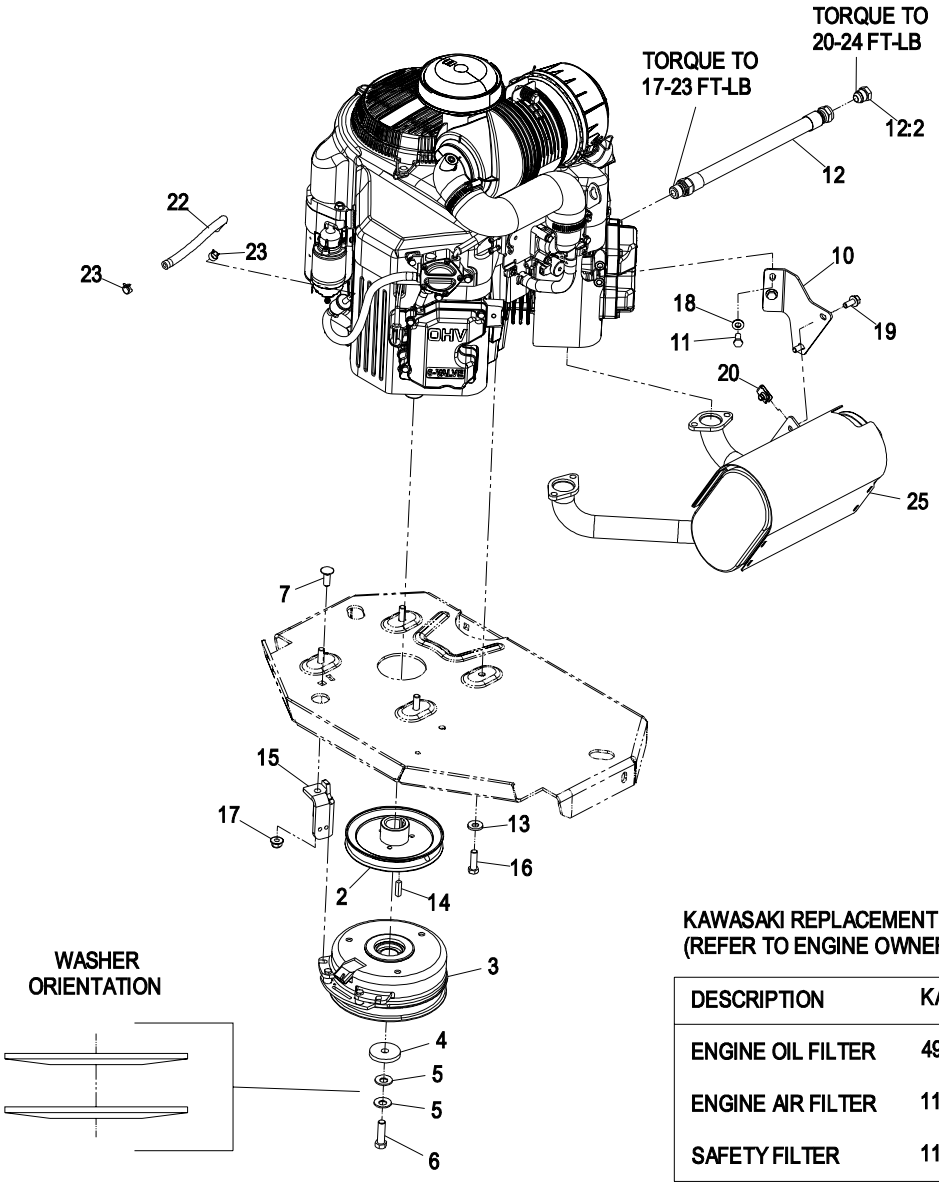


**KAWASAKI REPLACEMENT PARTS LIST**
**(REFER TO ENGINE OWNER'S MANUAL)**

| DESCRIPTION | KAWASAKI PART |
|---|---|
| ENGINE OIL FILTER | 49065-2078 |
| ENGINE AIR FILTER | 11013-7038 |
| SAFETY FILTER | 11013-7039 |

| Item | Part No. | Description | Qty. |
|---|---|---|---|
| 2 | 109-9905 | Sheave, W/Hub | 1 |
| 3 | 109-5004 | Clutch, CMS-250 | 1 |
| 4 | 109-6919 | Washer, Clutch | 1 |
| 5 | 1-603610 | Washer, Spring Disc 7/16 | 2 |
| 6▲ | 109-9761 | Screw, HH 7/16-20 x 1 1/2 W/Loctite | 1 |
| 7 | 3231-22 | Bolt, Carriage 3/8-16 x 1 | 1 |
| 10 | 109-9217 | Bracket, Muffler | 1 |
| 11 | 33114-020 | Screw, HH M8-1.25 x 20mm | 2 |
| 12 | 109-4490 | Asm, Hose-Oil Drain W/Plug | 1 |
| 12:2 | 109-1012 | Plug | 1 |
| 13 | 98-5975 | Washer, Spring Disc 3/8 | 4 |

| Item | Part No. | Description | Qty. |
|---|---|---|---|
| 14 | 1-807259 | Key, Machine 1/4 x 1/4 x 1 | 1 |
| 15 | 109-8138-01 | Anchor, Clutch | 1 |
| 16 | 323-7 | Screw, HH 3/8-16 x 1 1/4 | 4 |
| 17 | 104-8301 | Nut, Nyloc 3/8-16 Flg | 1 |
| 18 | 1-303334 | Washer, Spring Disc 5/16 | 2 |
| 19 | 3234-5 | Screw, HH FLG 5/16-18 x 3/4 | 2 |
| 20 | 94-2413 | U-Nut | 2 |
| 22 | 109-0296 | Hose, Fuel Line 15" | 1 |
| 23 | 2412-98 | Clamp, Hose | 2 |
| 25 | 109-9879 | Muffler | 1 |

Exmark red touch up paint (spray paint – P/N 1-850337 - .6 oz liquid bottle – P/N 103-9140)

▲ Use Pro-Lock, Nut Type (P/N 1-840022, .5ml tube) on clutch bolt.

# HYDRAULIC GROUP

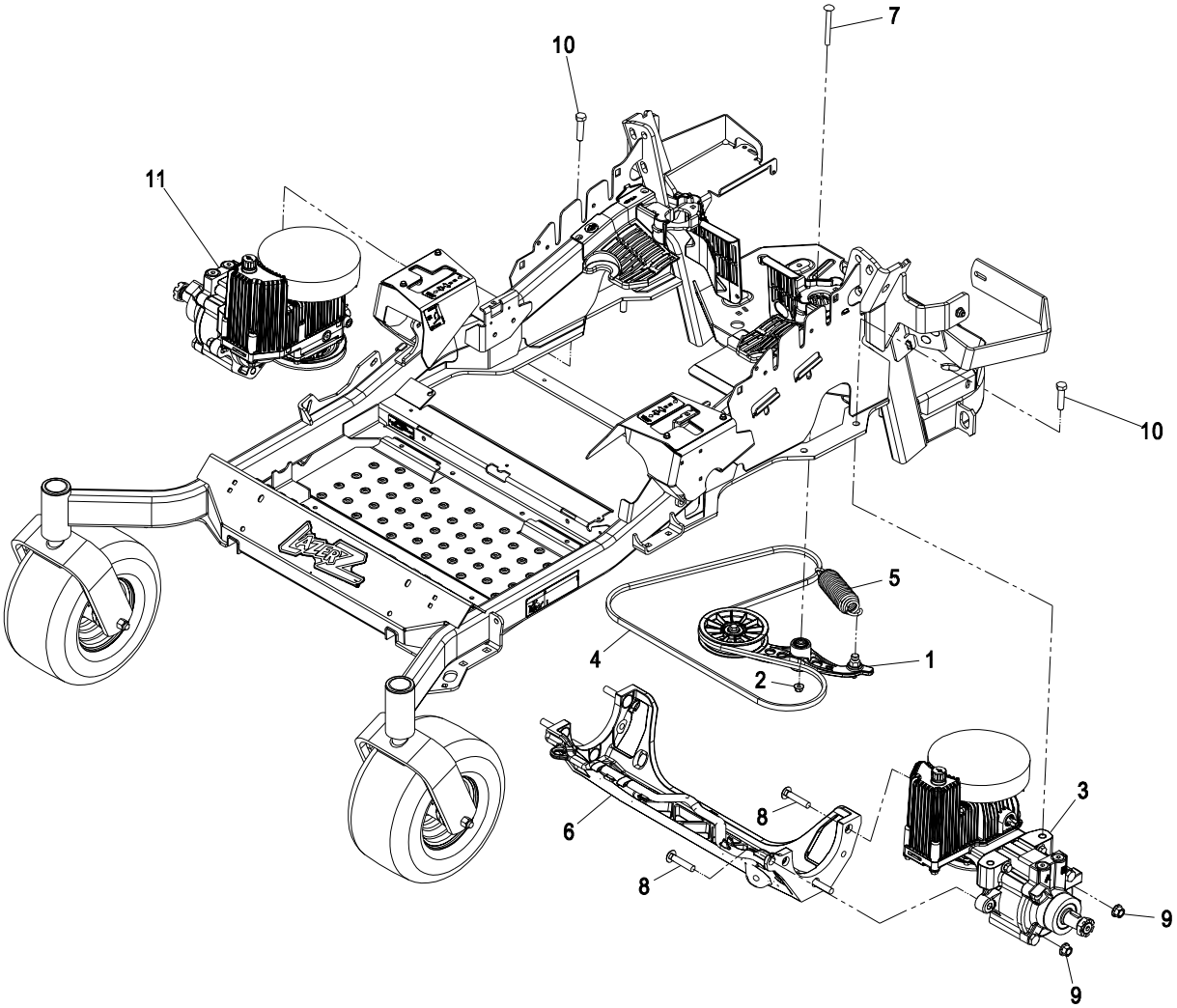


| Item | Part No. | Description | Qty. |
|---|---|---|---|
| 1 | 109-2182 | Asm, Pump Idler | 1 |
| 2 | 109-6658 | Nut, Nyloc 3/8-16 Flg | 1 |
| 3 | 116-1322 | Hydro, LH 12CC | |
| | | W/Check (48” & 52”) | 1 |
| | 116-1326 | Hydro, LH 16CC | |
| | | W/Shock (60” & 72”) | 1 |
| 4 | 109-3388 | Belt, V | 1 |
| 5 | 116-0133 | Spring, Extension | 1 |
| 6 | 109-9375 | Cradle, Machined Hydro | 1 |
| 7 | 3231-41 | Bolt-Carriage | 1 |
| 8 | 3233-34 | Bolt, Carriage 1/2-13 x 2 1/2 | 6 |
| 9 | 99-5107 | Nut, Lock 1/2-13 | 6 |
| 10 | 325-8 | Screw, HH 1/2-13 x 1 1/4 | 4 |

| Item | Part No. | Description | Qty. |
|---|---|---|---|
| 11 | 116-1323 | Hydro, RH 12CC | |
| | | W/Check (48” & 52”) | 1 |
| | 116-1327 | Hydro, RH 16CC | |
| | | W/Shock (60” & 72”) | 1 |
| 12✚ | 117-0377 | Bracket, Anchor Cable | 2 |
| 13✚ | 116-0164 | Filter, Hydro | 2 |
| 14✚ | 116-0233 | Fan, Hydro | 2 |
| 15✚ | 116-0234 | Pulley, Hydro | 2 |
| 16✚ | 116-0235 | Handle, Hydro Bypass Valve | 2 |
| 17✚ | 116-0236 | Dipstick, Hydro | 2 |
| 18✚ | 116-0237 | Gasket, Hydro Dipstick | 2 |
| 19✚ | 109-9828 | Oil, Exmark Premium Hydro | 4 |

✚ Not shown

# PUMP IDLER ASSEMBLY – 109-2182

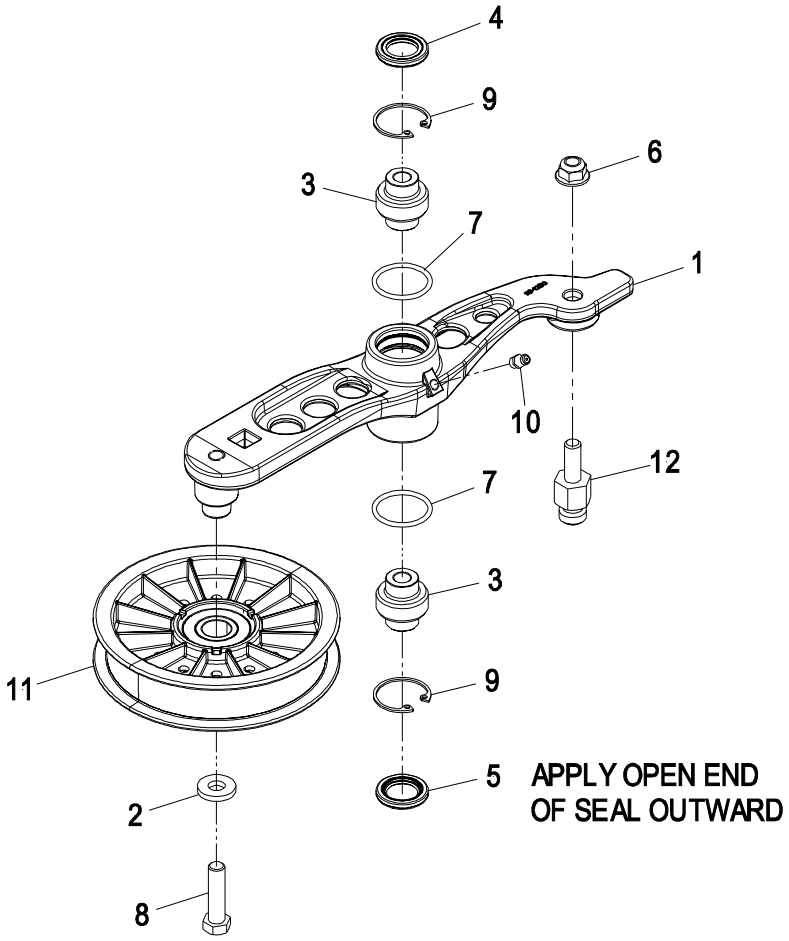


| Item | Part No. | Description | Qty. |
|---|---|---|---|
| 2 | 43-0940 | Spacer-Hub, Blower | 1 |
| 3 | 103-3504 | Bearing, Spherical | 2 |
| 4 | 103-3505 | Seal, Double Lip | 1 |
| 5 | 103-3506 | Seal, Single Lip | 1 |
| 6 | 104-8301 | Nut, Nyloc 3/8-16 Flg | 1 |
| 7 | 106-7159 | O-Ring | 2 |

| Item | Part No. | Description | Qty. |
|---|---|---|---|
| 8 | 323-8 | Screw, HH 3/8-16 x 1 1/2 | 1 |
| 9 | 32120-10 | Ring, Retaining | 2 |
| 10 | 302-19 | Zerk, 1/4-28 Str | 1 |
| 11 | 109-8076 | Pulley, Idler 5" X 1" Nylon | 1 |
| 12 | 109-7399 | Pin, Spring Anchor | 1 |

# ELECTRICAL GROUP

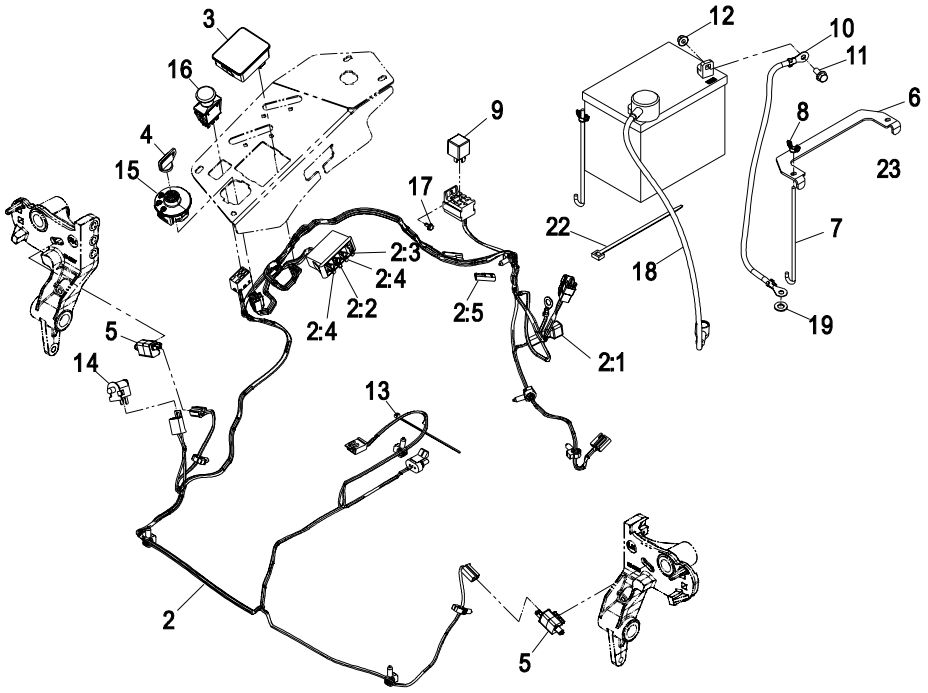


| Item | Part No. | Description | Qty. |
|---|---|---|---|
| 2▲ | 115-2796 | Harness, Wire, Main | 1 |
| 2:1 | 103-3895 | Diode, TVS | 1 |
| 2:2 | 218-578 | Fuse, 10 Amp | 1 |
| 2:3 | 109355 | Fuse, 15 Amp | 1 |
| 2:4 | 109102 | Fuse, 25 Amp | 2 |
| 2:5 | 116-0053 | Cap, Plug | 1 |
| 3 | 116-0916 | Asm, Fuel/Hour Meter | 1 |
| 4 | 1-603511 | Key, Ignition | 1 |
| | 103-2106 | Key, Ignition | 1 |
| 5 | 110-6765 | Switch-Single Pole No | 2 |
| 6 | 116-0042-03 | Strap, Battery Tie Down | 1 |
| 7 | 1-633651 | Bolt-Holddown | 2 |
| 8 | 1-543792 | Wingnut, Nyloc 1/4-20 | 2 |

| Item | Part No. | Description | Qty. |
|---|---|---|---|
| 9 | 1-643275 | Relay, 12VDC 40 Amp | 1 |
| 10 | 114-1218 | Cable-Battery, Negative | 1 |
| 11 | 3234-5 | Screw, HH FLG 5/16-18 x 3/4 | 2 |
| 12 | 104-8300 | Nut, Nyloc 5/16-18 Flg | 2 |
| 13 | 1-303287 | Tie, Cable 5 1/2 (Small) | 3 |
| 14 | 82-2190 | Switch | 1 |
| 15 | 116-0229 | Switch-Ignition | 1 |
| 16 | 116-0124 | Switch, PTO | 1 |
| 17 | 104-2065 | Screw, HWH #10-24 x 3/8 | 1 |
| 18 | 115-3864 | Cable-Battery, Positive | 1 |
| 19 | 3256-24 | Washer, Flat | 1 |
| 22 | 1-303335 | Tie, Plastic | 1 |

Exmark black touch up spray paint - gloss black.

▲ Use dielectric grease on all wiring harness connectors.

# DECAL GROUP

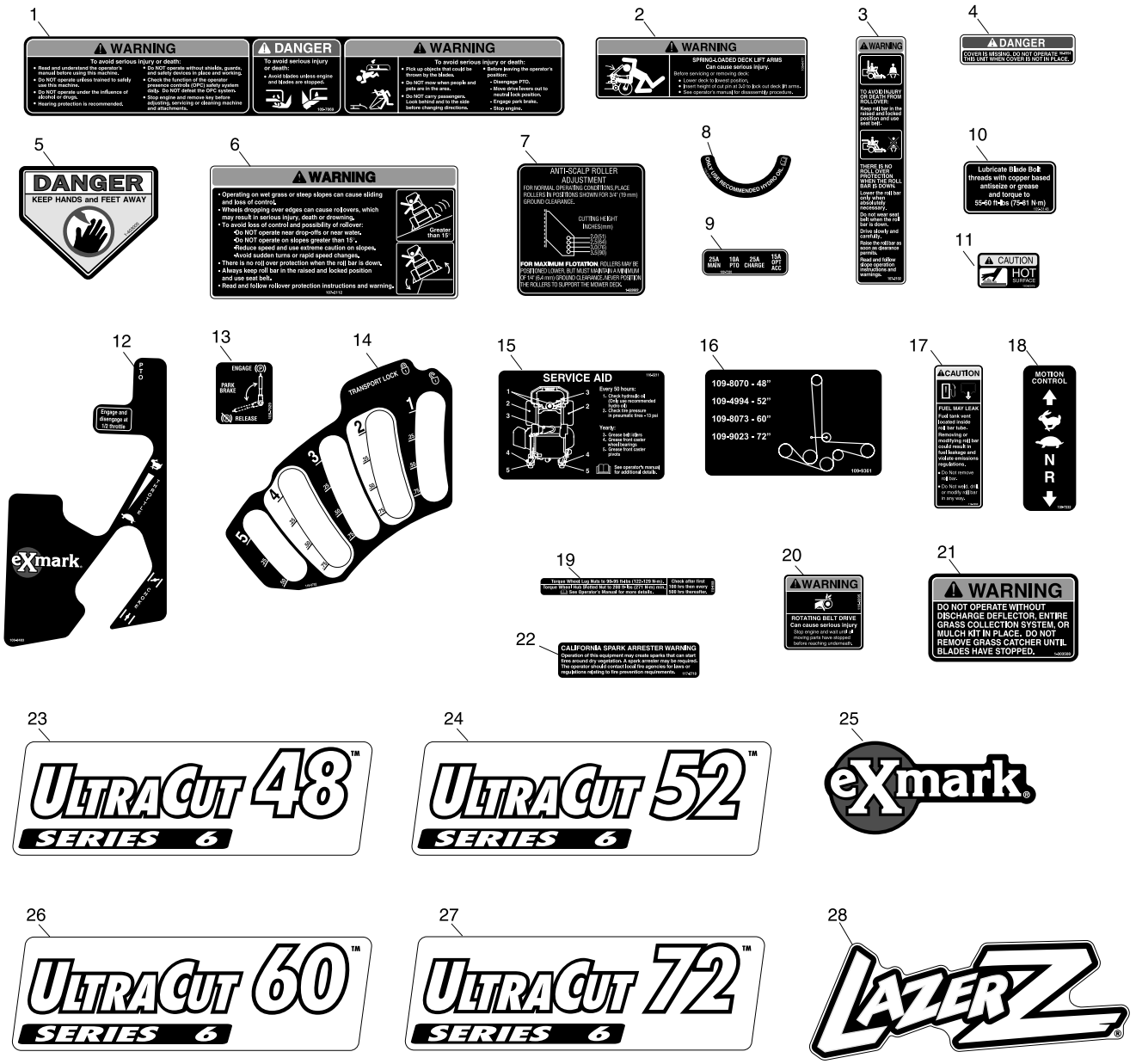


| Item | Part No. | Description | Qty. |
|---|---|---|---|
| 1 | 109-7069 | Decal, Console | 1 |
| 2 | 109-9477 | Decal, Warning Spring Load | 2 |
| 3 | 107-2102 | Decal, ROPS Folding | 1 |
| 4 | 98-5954 | Decal, Danger | 2 |
| 5 | 1-403005 | Decal, Danger | 2 |
| 6 | 107-2112 | Decal, Warning Slope | 1 |
| 7 | 1-633922 | Decal, Anti-Scalp | 1 |
| 8 | 116-0157 | Decal, Hydro Oil | 2 |
| 9 | 109-7330 | Decal, Fuse | 1 |
| 10 | 109-3148 | Decal, Bolt Torque | 1 |
| 11 | 103-2076 | Decal, Hot Surface | 3 |
| 12 | 109-8483 | Decal, Control Panel | 1 |
| 13 | 109-7929 | Decal, Park Brake | 1 |
| 14 | 116-0752 | Decal, Cut of Height | 1 |

| Item | Part No. | Description | Qty. |
|---|---|---|---|
| 15 | 116-0211 | Decal, Service Aid | 1 |
| 16 | 109-9361 | Decal, Belt Routing | 1 |
| 17 | 116-0090 | Decal, Caution Fuel Vent | 1 |
| 18 | 109-7232 | Decal, Motion Control | 2 |
| 19 | 116-0165 | Decal, Wheel Hub | 2 |
| 20 | 116-0205 | Decal, Belt Drive | 2 |
| 21 | 1-303508 | Decal, Discharge Warning | 1 |
| 22 | 117-2718 | Decal, Spark Arrester | 1 |
| 23 | 109-9437 | Decal, UltraCut 48 Series 6 | 1 |
| 24 | 109-9438 | Decal, UltraCut 52 Series 6 | 1 |
| 25 | 103-2883 | Decal, Exmark Logo | 2 |
| 26 | 109-9439 | Decal, UltraCut 60 Series 6 | 1 |
| 27 | 109-9440 | Decal, UltraCut 72 Series 6 | 1 |
| 28 | 103-3113 | Decal, Lazer | 1 |

.

# ELECTRICAL DIAGRAM

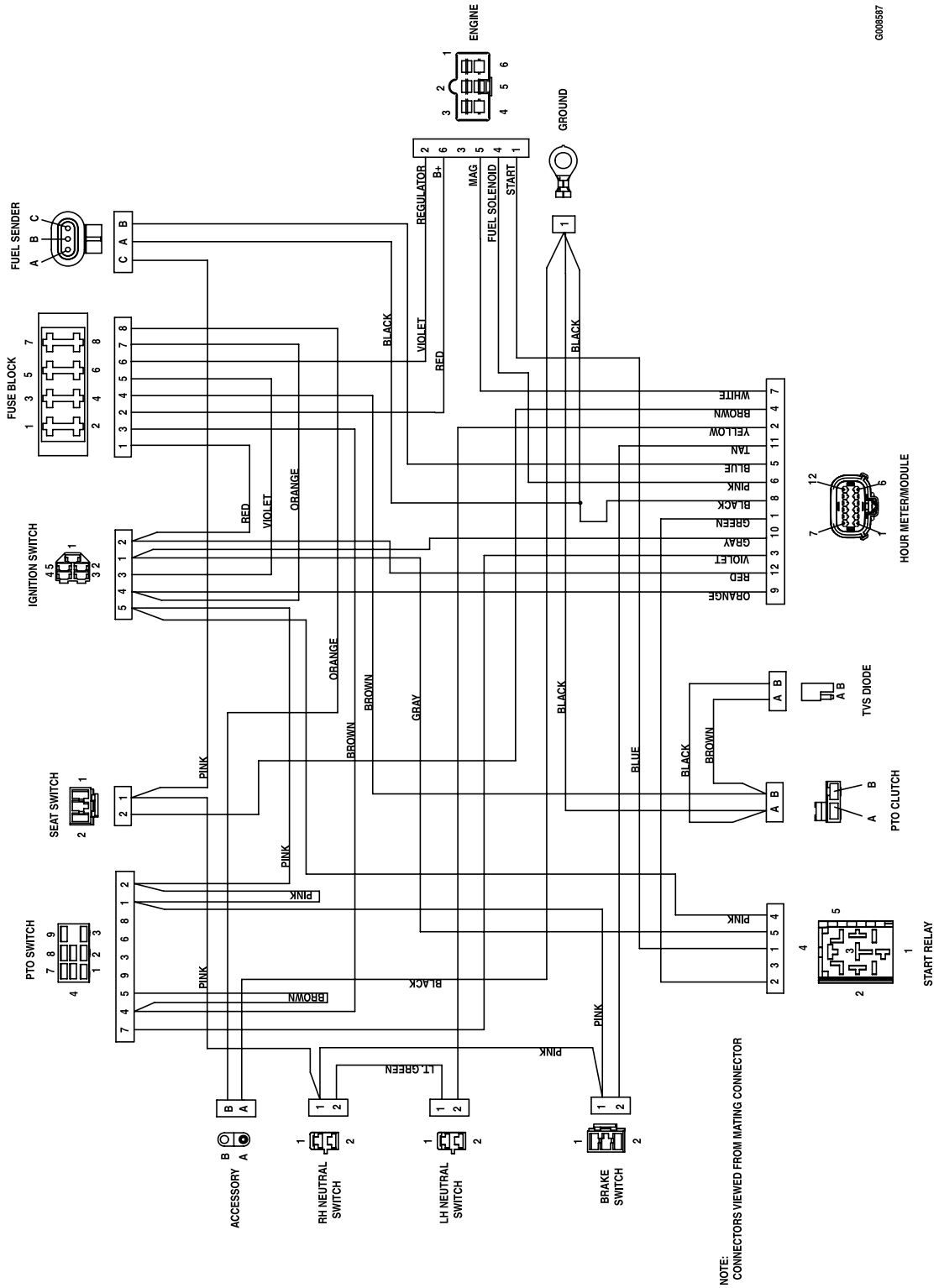


IGNITION SWITCH CONNECTIONS

| TERMINAL | CONNECTIONS |
|---|---|
| TERMINAL A | ACCESSORY |
| TERMINAL B | BATTERY |
| TERMINAL I | IGNITION |
| TERMINAL R | RECTIFIER |
| TERMINAL S | START |

| POSITION | CIRCUIT "MAKE" |
|---|---|
| 1.OFF | NONE |
| 2.RUN | B + R + I + A |
| 3.START | B + R + I + S |

# ELECTRICAL LOGIC SCHEMATIC

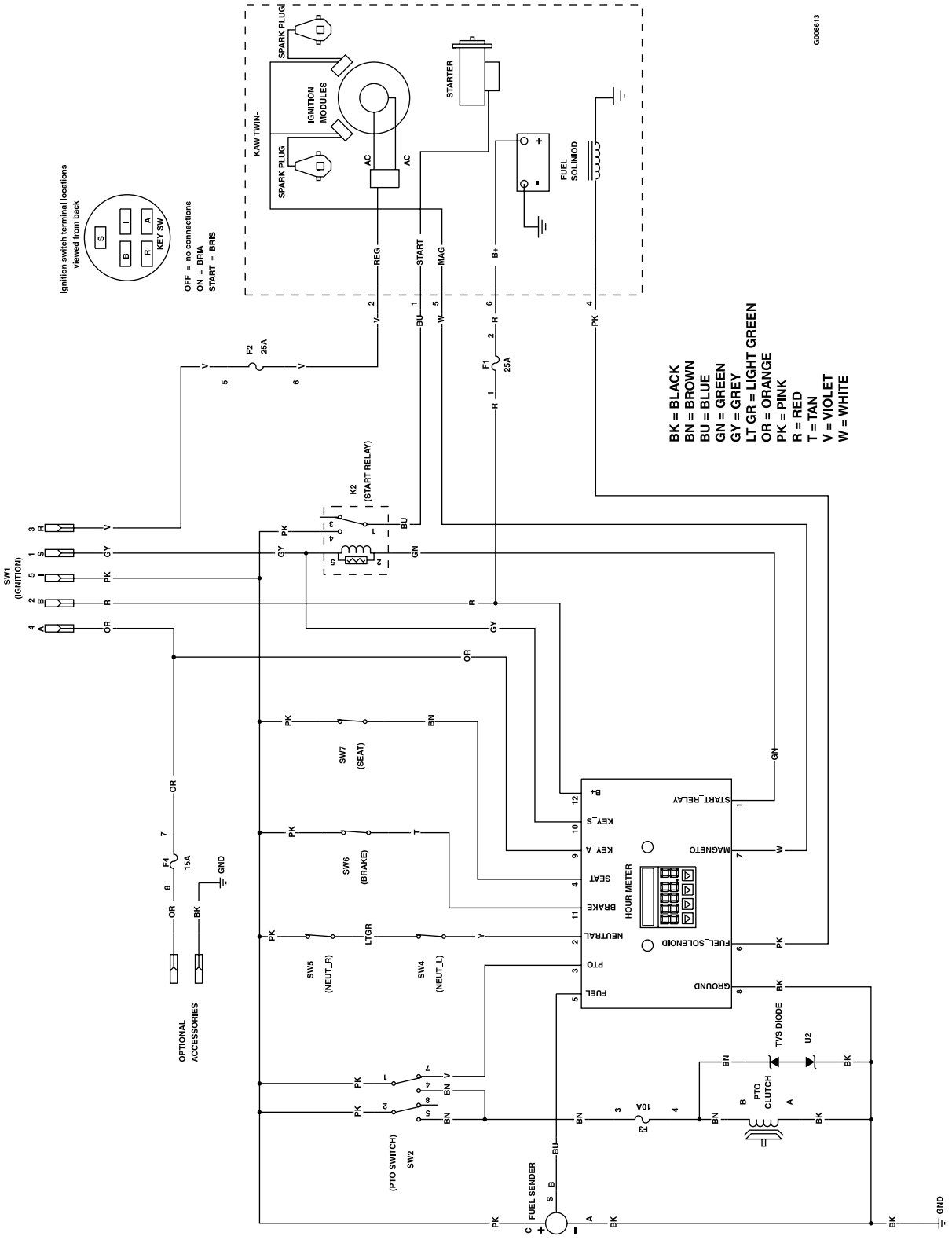

# SERVICE RECORD

| Date | Description of Work Done | Service Done By |
|---|---|---|
| | | |
| | | |
| | | |
| | | |
| | | |
| | | |
| | | |
| | | |
| | | |
| | | |
| | | |
| | | |
| | | |
| | | |
| | | |
| | | |
| | | |
| | | |
| | | |
| | | |
| | | |
| | | |
| | | |
| | | |
| | | |
| | | |
| | | |
| | | |
| | | |
| | | |
| | | |
| | | |
| | | |
| | | |
| | | |
| | | |
| | | |

# NEW EXMARK PREMIUM HYDRO OIL

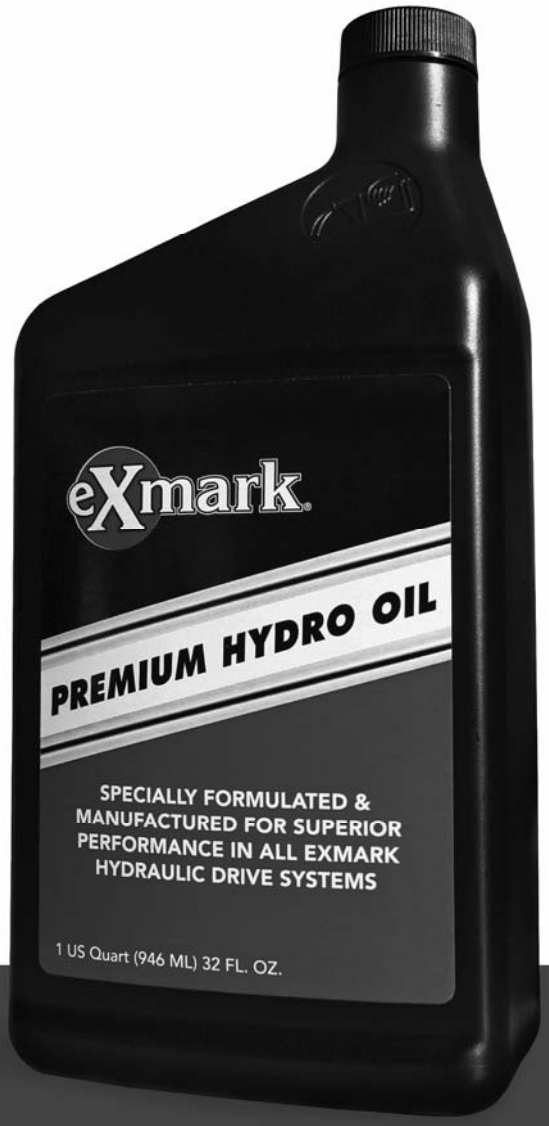


## BENEFITS

- Designed & manufactured with superior anti-wear protection
- Superior thermal stability
- Consistent hydro performance
- Superior shear resistance under heavy loads
- Field tested & proven performance
- Twice the shear stability of competing oils
- Enhanced control performance
- Specially formulated for any Exmark hydraulic system

## NOW AVAILABLE FOR PURCHASE

Part No. 109-9828

eXmark®

# SEE EXMARK'S COMPLETE LINE OF ACCESSORIES

## MID-MOUNT RIDING ACCESSORIES

CUSTOM RIDE SEAT SUSPENSION SYSTEM
FULL SUSPENSION SEAT
DECK LIFT ASSIST KIT
HITCH KIT
LIGHT KIT
12V POWER PORT
MICRO-MULCH SYSTEM
OPERATOR CONTROLLED DISCHARGE
ROLL OVER PROTECTION SYSTEM (ROPS)
SUN SHADE
TRASH CONTAINER
TURF STRIPER
ULTRA VAC COLLECTION SYSTEM
ULTRA VAC QUICK DISPOSAL SYSTEM

## OUT-FRONT RIDING ACCESSORIES

CUSTOM RIDE SEAT SUSPENSION SYSTEM
DUAL-TAIL WHEEL
FLOOR PAN EXTENDER
HITCH KIT
LIGHT KIT
MICRO-MULCH SYSTEM
ROLL OVER PROTECTION SYSTEM (ROPS)
SNOW BLADE
SNOWBLOWER
SUN SHADE
TRASH CONTAINER
ULTRA VAC COLLECTION SYSTEM
ULTRA VAC QUICK DISPOSAL SYSTEM
WEATHER CAB

## WALK-BEHIND ACCESSORIES

GRASS CATCHER
MICRO-MULCH SYSTEM
TURF STRIPER
STANDON

Place Model No. and Serial No. Label Here (Included in the Literature Pack or Fill in Below

Model No. _____

Serial No. _____

Date Purchased _____

Engine Model No. and Spec. No. _____

Engine Serial No. (E/No) _____

**© 2009 Exmark Mfg. Co., Inc.**
**All Rights Reserved**

**Industrial Park Box 808**
**Beatrice, NE 68310**
**(402) 223-6300**
**Fax (402) 223-5489**

**Part No. 4500-484 Rev. B**
**Printed In USA.**

**www.exmark.com**