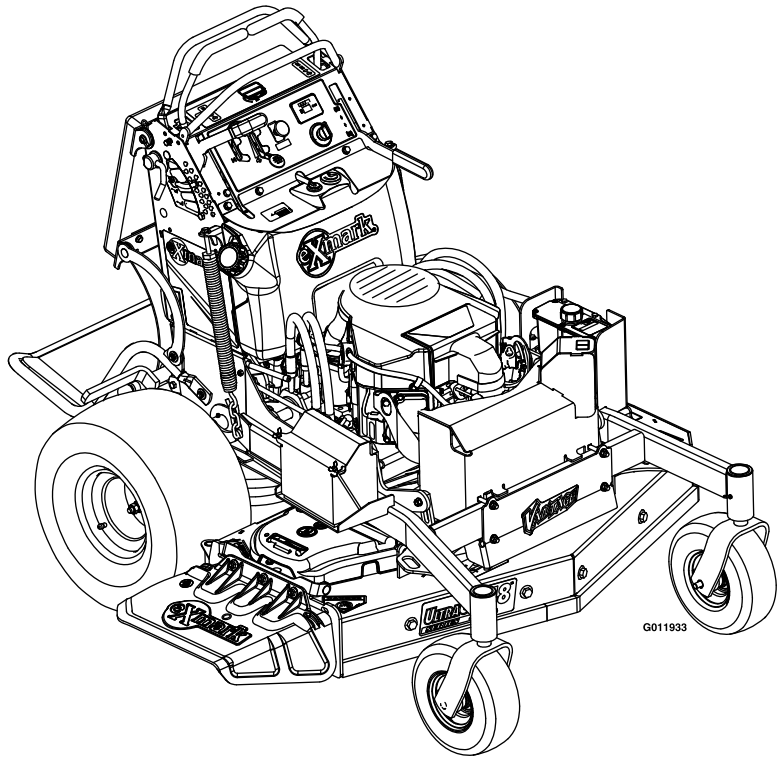

VANTAGE™ MODELS

Parts Manual

For Serial Nos.
850,000 & Higher
Part No. 4500-545 Rev. E

EXMARK PARTS PLUS

PARTS OVERNIGHT OR FREE*

If your Exmark dealer does not have the Exmark part in stock, Exmark will get the parts to the dealer the next business day or the part will be FREE Guaranteed!! (Some restrictions apply. See your participating Exmark Dealer for details.)

WARNING

READ OPERATOR'S MANUAL BEFORE OPERATING OR SERVICING EXMARK EQUIPMENT.

TABLE OF CONTENTS

Description	Page
Carbon Canister Group	21
Caster Wheel Assembly	11
Controls Group	13
Cushion Assembly	16
Cutter Housing Assembly	5, 8
Decal Group	26
Deck Group	3-8
Deck Support Group	12
Electrical Diagram	27
Electrical Group	25
Electrical Logic Schematic	28
Engine Group	22
Fuel Tank Group	18
Fuel Tank Assembly	19-20
Ground Drive Group	23
Mainframe Group	9-10
Park Brake Group	14
Platform Assembly	17
Platform Group	15
Pump Idler Assembly	24

48” DECK GROUP

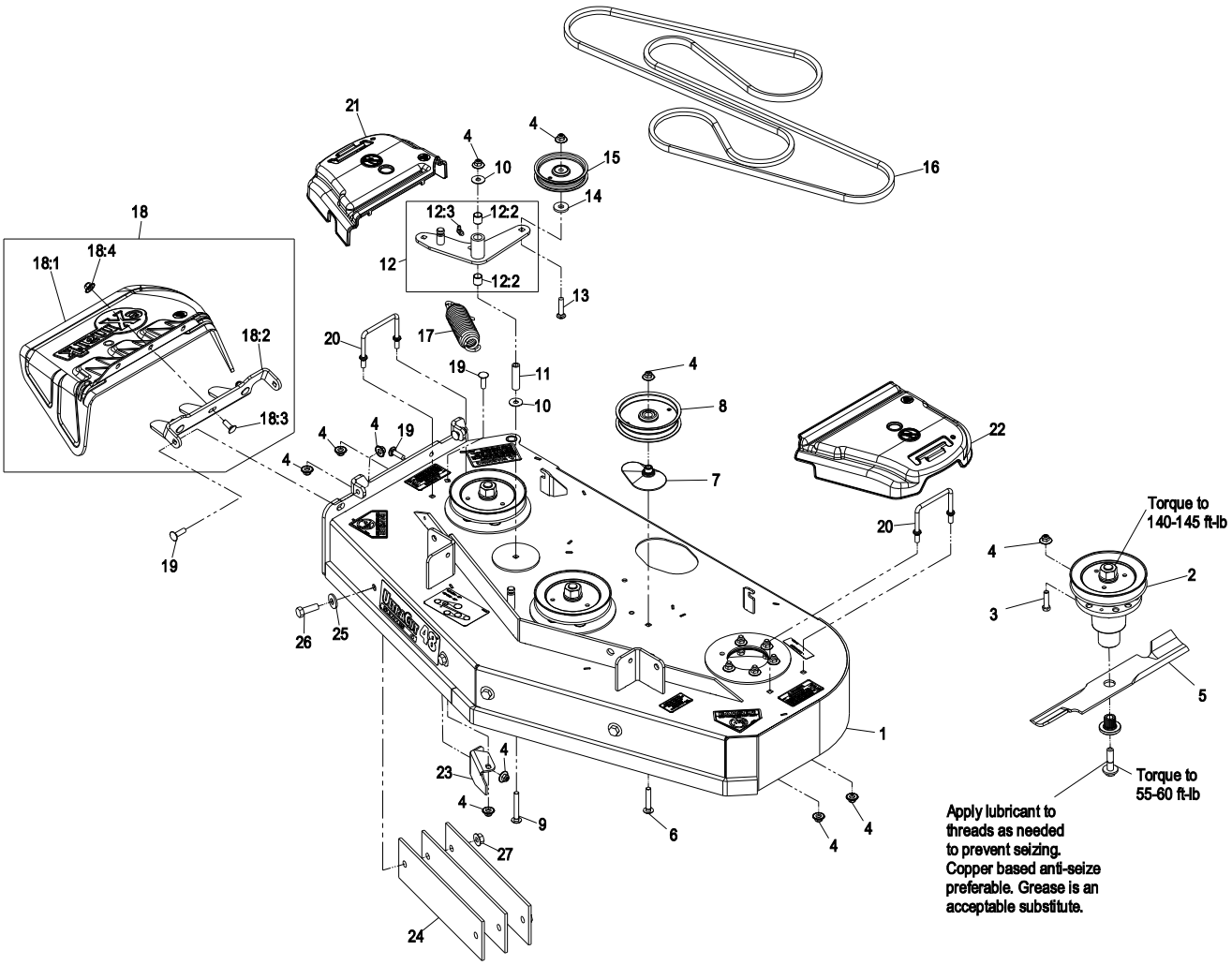

Item	Part No.	Description	Qty.
1	116-2586	Asm, Deck W/Decals 484	1
2	109-9017	Kit, Cutter Housing 48	3
3	323-8	Screw, HH 3/8-16 x 1 1/2	18
4	109-6658	Nut, Nyloc 3/8-16 Flg	29
5	103-6401	Blade, Notched	3
●	103-6391	Blade, Mulching	3
	103-6386	Blade, Low Lift	3
	103-6381	Blade, Solid	3
	103-6396	Blade, Extreme	3
6	3231-7	Bolt, Carriage 3/8-16 x 2 1/4	1
7	109-2872	Spacer-Pulley	1
8	1-613098	Pulley-Idler	1
9	3231-11	Bolt, Carriage 3/8-16 x 3 1/2	1
10	52-2860	Washer	2
11	1-603384	Bushing-Pivot, Idler	1
12	116-2694	Idler Asm W/ Bearings	1
12:2	1-513034	Bearing	2
12:3	302-40	Zerk	1
13	116-3381	Bolt, Carriage 3/8-16 x 1 3/4	1

Item	Part No.	Description	Qty.
14	1-373034	Washer	1
15	93-1622	Pulley-Idler	1
16	99-4627	V-Belt	1
17	116-0133	Spring, Extension	1
18	109-7188	Asm, Discharge Chute	1
18:1	109-2738	Chute, Discharge	1
18:2	109-8675-01	Bracket, Discharge Chute	1
18:3	3231-22	Bolt, Carriage 3/8-16 x 1	3
18:4	109-6658	Nut, Nyloc 3/8-16 Flg	3
19	3231-28	Bolt, Carriage 3/8-16 x 1 1/4	4
20	109-6982	Wireform-Cover	2
21	109-6935	Cover-Belt, RH	1
22	109-6936	Cover-Belt, LH	1
23	109-9010-01	Baffle, Discharge	1
24	116-1822-01	Bar, Weight	6
25	1-513435	Washer, Spring Disc 1/2	4
26	325-6	Screw, HH 1/2-13 x 1 1/2	4
27	32128-49	Nut, Whizlock 1/2-13	4
	116-2036	Asm, Complete Deck	1

Exmark red touch up paint (spray paint – P/N 1-850337 - .6 oz liquid bottle – P/N 103-9140).

● Requires installation of Micro-Mulch accessory for proper mulching. Mulch kit P/N MK484.

48” DECK W/DECALS ASSEMBLY – 116-2586

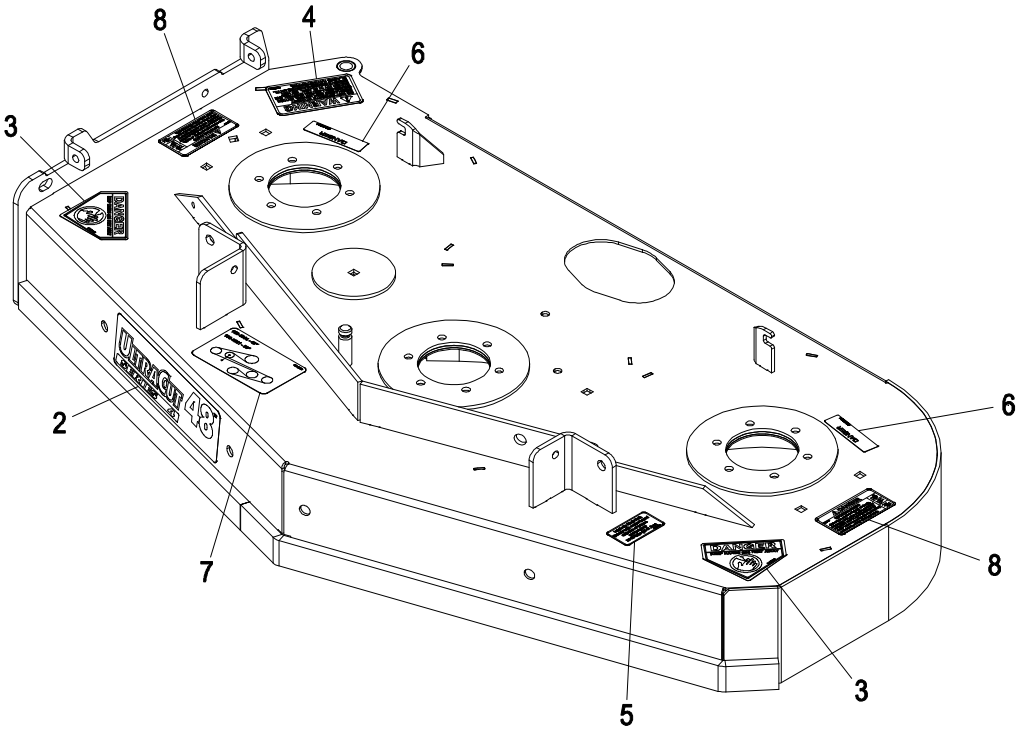

Item	Part No.	Description	Qty.
2	116-0033	Decal, Ultracut 48 Series 4	1
3	1-403005	Decal-Danger	2
4	1-303508	Decal-Warning, Discharge	1
5	109-3148	Decal, Bolt Torque	1
6	98-5954	Decal-Cover, Missing	2

Item	Part No.	Description	Qty.
7	116-3283	Decal-Belt Routing	1
8	116-3076	Decal-Rotating Parts	2

CUTTER HOUSING ASSEMBLY – 109-9017

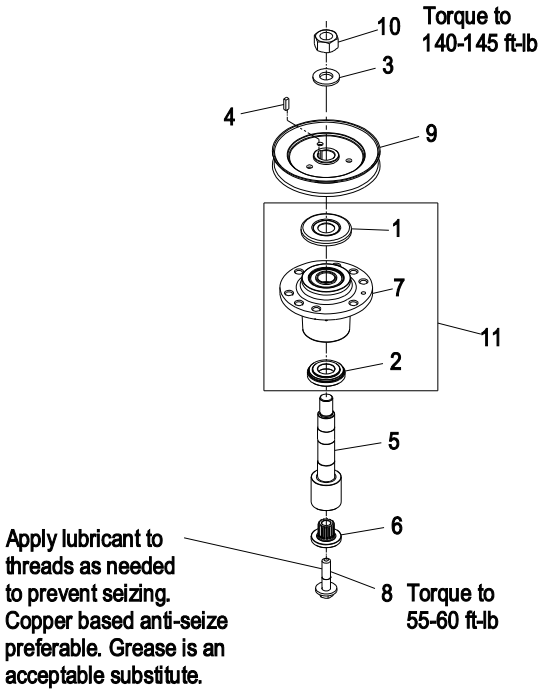

Item	Part No.	Description	Qty.
1	103-1330	Guard, Bearing Top	1
2	103-2535	Spacer, Guard Bottom	1
3	103-2802	Washer, Spring Disc 3/4	1
4	103-2982	Key, Machine 1/4 x 3/16 x 3/4	1
5✚■	103-9086	Kit, Splined Spindle	1
6	103-3037	Bushing, Splined	1

Item	Part No.	Description	Qty.
7	103-8353	Housing, Cutter	1
8	109-9220	Screw, SEMS 1/2-20 x 2.19	1
9	116-1444	Sheave, Blade Drive	1
10	3217-46	Nut, Hex 3/4-16 Heavy	1
11	103-8280	Kit, Cutter Housing	1

✚ Apply Mobil HTS grease (P/N 103-5217 1.5 oz packet) (or a food grade antiseize) between the jackshaft and bearings, jackshaft and sheaves, spindles and bearings, spindles and sheaves, and under top bearing guard. DO NOT use a copper or nickel based antiseize.

■ Kit includes items 3, 4, 5, 6, 8, & 10.

52” DECK GROUP

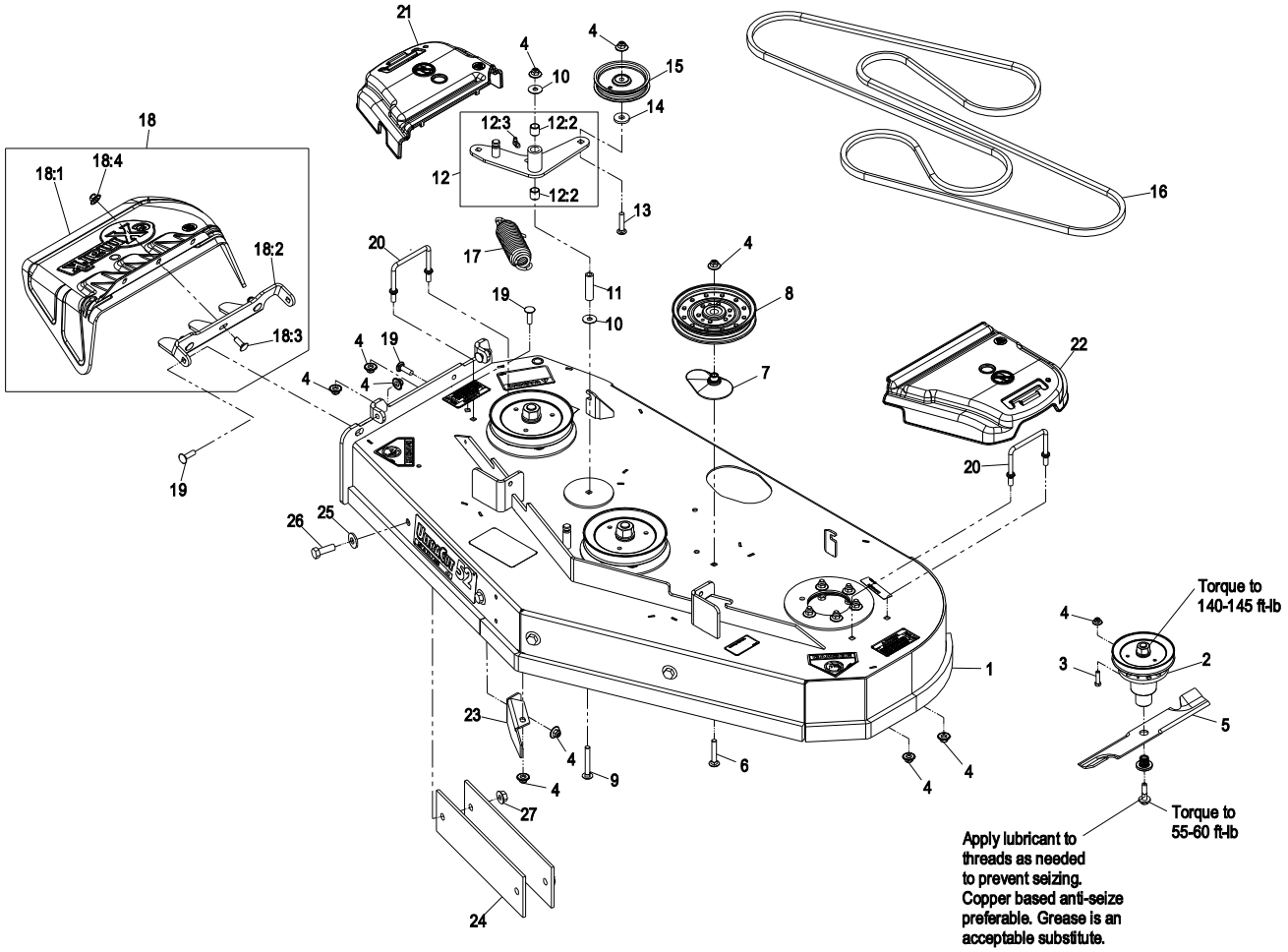

Item	Part No.	Description	Qty.
1	116-2588	Asm, Deck W/ Decals 524	1
2	109-9018	Kit, Cutter Housing 52	3
3	323-8	Screw, HH 3/8-16 x 1 1/2	18
4	109-6658	Nut, Nyloc 3/8-16 Flg	29
5	103-6402	Blade-Notched	3
●	103-6392	Blade, Mulching	3
	103-6387	Blade, Low Lift	3
	103-6382	Blade, Solid	3
	103-6397	Blade, Extreme	3
6	3231-7	Bolt, Carriage 3/8-16 x 2 1/4	1
7	109-2872	Spacer-Pulley	1
8	1-633109	Idler-Flat	1
9	3231-11	Bolt, Carriage 3/8-16 x 3 1/2	1
10	52-2860	Washer	2
11	1-603384	Bushing-Pivot, Idler	1
12	116-2694	Idler Asm W/ Bearings	1
12:2	1-513034	Bearing	2
12:3	302-40	Zerk	1
13	116-3381	Bolt, Carriage 3/8-16 x 1 3/4	1

Item	Part No.	Description	Qty.
14	1-373034	Washer	1
15	93-1622	Pulley-Idler	1
16	116-3111	Belt-B158.0	1
17	116-0133	Spring, Extension	1
18	109-7188	Asm, Discharge Chute	1
18:1	109-2738	Chute, Discharge	1
18:2	109-8675-01	Bracket, Discharge Chute	1
18:3	3231-22	Bolt, Carriage 3/8-16 x 1	3
18:4	109-6658	Nut, Nyloc 3/8-16 Flg	3
19	3231-28	Bolt, Carriage 3/8-16 x 1 1/4	4
20	109-6982	Wireform-Cover	2
21	109-6935	Cover-Belt, RH	1
22	109-6936	Cover-Belt, LH	1
23	109-9915-01	Baffle, Discharge	1
24	116-1822-01	Bar, Weight [Red]	4
25	1-513435	Washer, Spring Disc 1/2	4
26	325-6	Screw, HH 1/2-13 x 1 1/2	4
27	32128-49	Nut, Whizlock 1/2-13	4
	116-2037	Asm, Complete Deck	1

Exmark red touch up paint (spray paint – P/N 1-850337 - .6 oz liquid bottle – P/N 103-9140).

● Requires installation of Micro-Mulch accessory for proper mulching. Mulch kit P/N MK524.

52” DECK W/DECALS ASSEMBLY – 116-2588

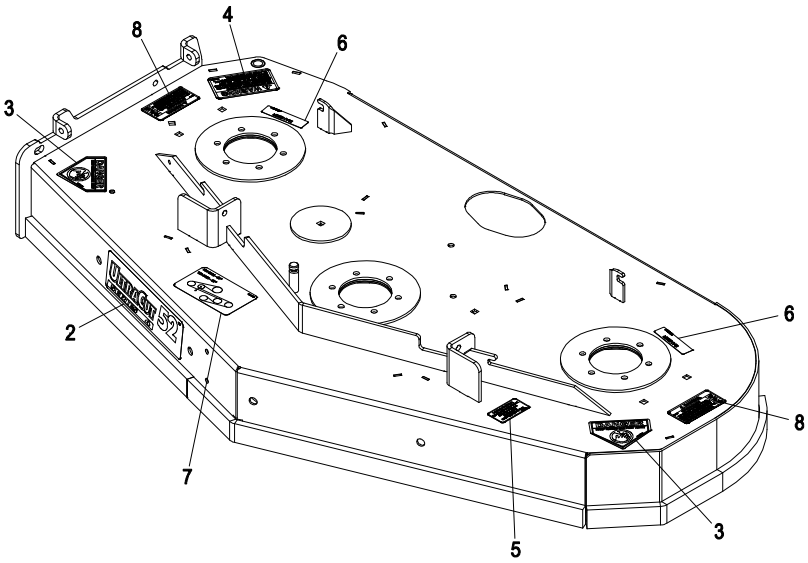

Item	Part No.	Description	Qty.
2	116-0034	Decal, Ultracut 52 Series 4	1
3	1-403005	Decal-Danger	2
4	1-303508	Decal-Warning, Discharge	1
5	109-3148	Decal, Bolt Torque	1

Item	Part No.	Description	Qty.
6	98-5954	Decal-Cover, Missing	2
7	116-3283	Decal-Belt Routing	1
8	116-3076	Decal-Rotating Parts	2

CUTTER HOUSING ASSEMBLY – 109-9018

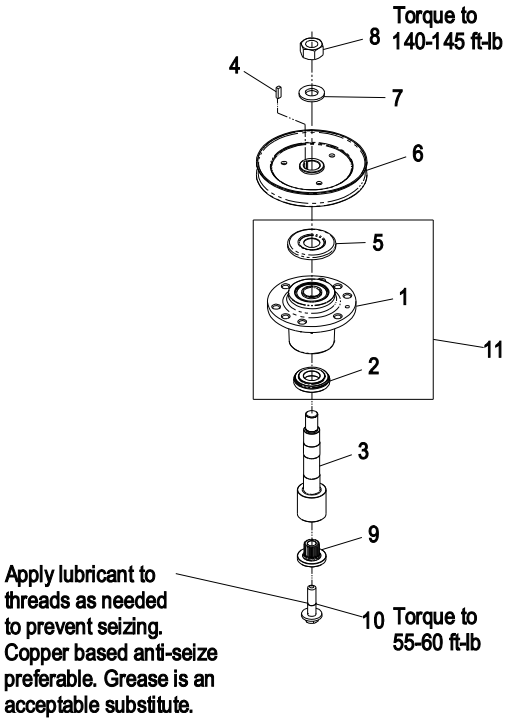

Item	Part No.	Description	Qty.
1	103-8353	Housing, Cutter	1
2	103-2535	Spacer, Guard Bottom	1
3✚■	103-9086	Kit, Splined Spindle	1
4	103-2982	Key, Machine 1/4 x 3/16 x 3/4	1
5	103-1330	Guard, Bearing Top	1
6	116-0186	Sheave, Blade Drive	1

Item	Part No.	Description	Qty.
7	103-2802	Washer, Spring Disc 3/4	1
8	3217-46	Nut, Hex 3/4-16 Heavy	1
9	103-3037	Bushing, Splined	1
10	109-9220	Screw, SEMS 1/2-20 x 2.19	1
11	103-8280	Kit, Cutter Housing	1

✚ Apply Mobil HTS grease (P/N 103-5217 1.5 oz packet) (or a food grade antiseize) between the jackshaft and bearings, jackshaft and sheaves, spindles and bearings, spindles and sheaves, and under top bearing guard. DO NOT use a copper or nickel based antiseize.

■ Kit includes items 3, 4, 7, 8, 9, & 10.

MAINFRAME GROUP

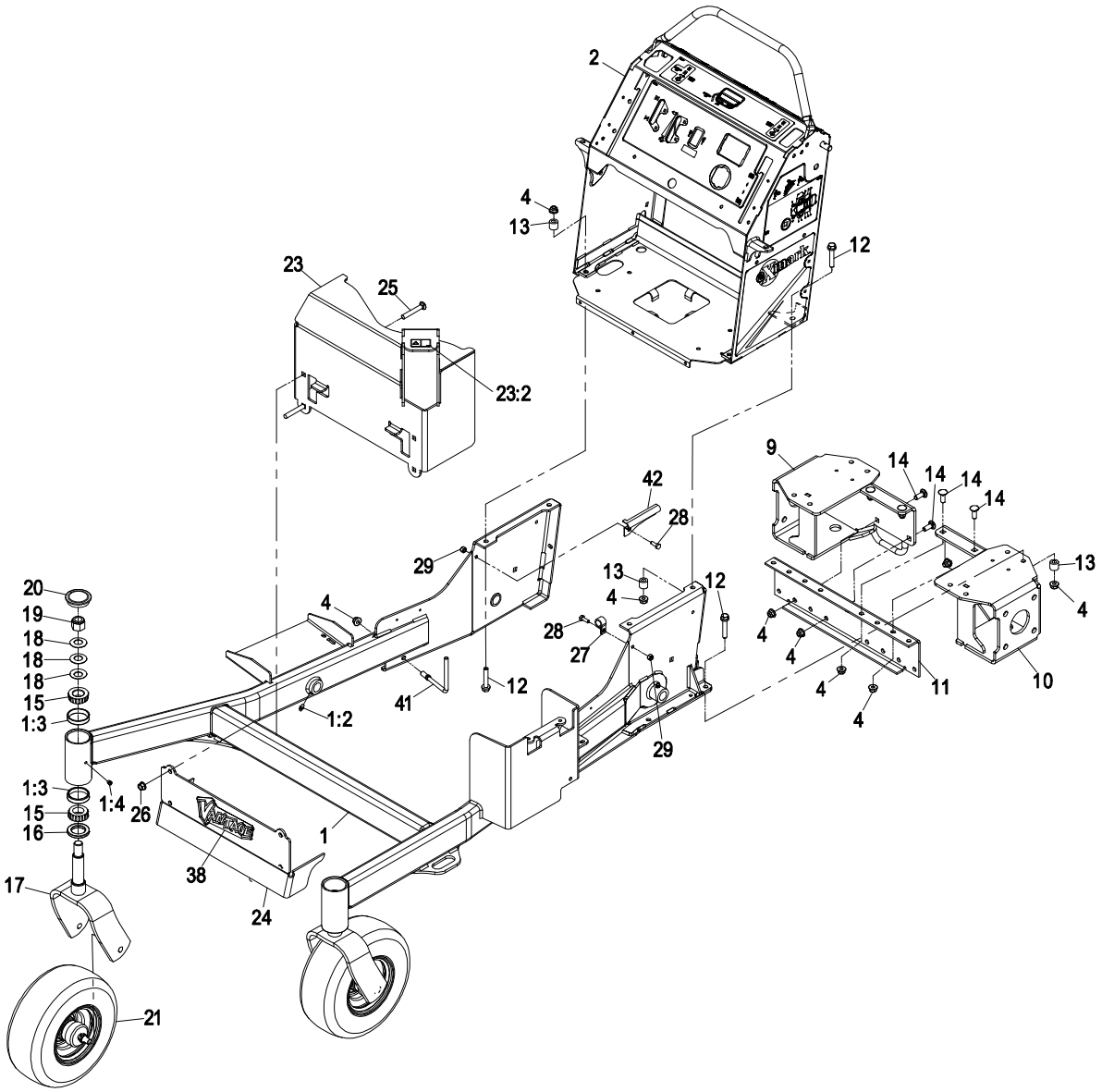

Item	Part No.	Description	Qty.
1	116-2486	Asm, Front Frame	1
1:2	302-5	Zerk 1/4-28 Str Thrd Forming	2
1:3	1-543508	Cup-Bearing Tapered Roller	4
1:4	1-811010	Plug	2
2	116-1802	Asm, Control Tower W/Decals	1
4	104-8301	Nut, Nyloc 3/8-16 Flg	18
9	119-7222-03	Asm, RH Motor Mount	1
10	119-7220-03	Asm, LH Motor Mount	1
11	119-7224-03	Mount-Motor, Center (Black)	1
12	108-3742	Screw, HH FLG 3/8-16 x 2	8
13	98-8895	Spacer	8
14	3231-22	Bolt, Carriage 3/8-16 x 1	8
15	1-543509	Cone, Bearing Tapered Roller	4
16	1-543511	Seal, Grease	2
17	103-8618-01	Fork-Caster	2

Item	Part No.	Description	Qty.
18	1-633508	Washer, Spring Disc	6
19	3296-51	Nut, Nyloc 3/4-10	2
20	103-4882	Cap-Grease	2
21	112-3810	Asm, Wheel And Bearing	2
23	116-2490	Muffler Guard W/Decal	1
23:2	106-5517	Decal, Surface Hot	1
24	116-3113-01	Panel-Guard (Red)	1
25	3231-31	Bolt, Carriage 3/8-16 x 2 1/2	4
26	32128-21	Nut, 3/8-16 Flanged Side Lock	4
27	2412-87	Clamp, Cable	1
28	321-4	Screw, HH 1/4-20 x 3/4	2
29	3296-42	Nut, Nyloc 1/4-20	2
38	116-3137	Decal-Vantage Logo	1
41	116-3382	Guide-Hose, Support	2
42	116-3456	Bracket, Fuel Hose	1

Exmark red touch up paint (spray paint – P/N 1-850337 - .6 oz liquid bottle – P/N 103-9140).
Exmark black touch up spray paint – gloss black.

CONTROL TOWER W/DECALS ASSEMBLY – 116-1802

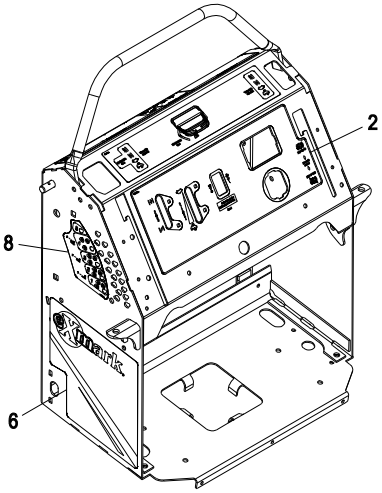

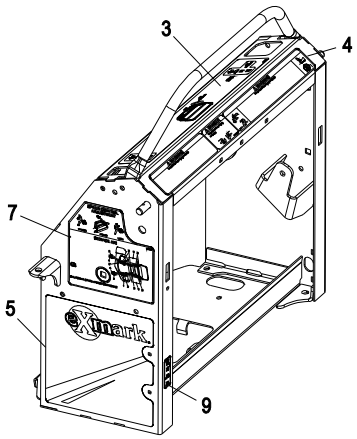

Item	Part No.	Description	Qty.
2	116-3067	Decal-Control Panel	1
3	116-1887	Decal-Motion Control	1
4	116-1886	Decal-Top Console	1
5	116-1908	Decal-LH Panel	1

Item	Part No.	Description	Qty.
6	116-1909	Decal-RH Panel	1
7	116-3260	Decal-Service Aid Vantage	1
8	116-2040	Decal-Height Of Cut	1
9	116-3267	Decal-Fuse	1

CASTER WHEEL ASSEMBLY – 112-3810

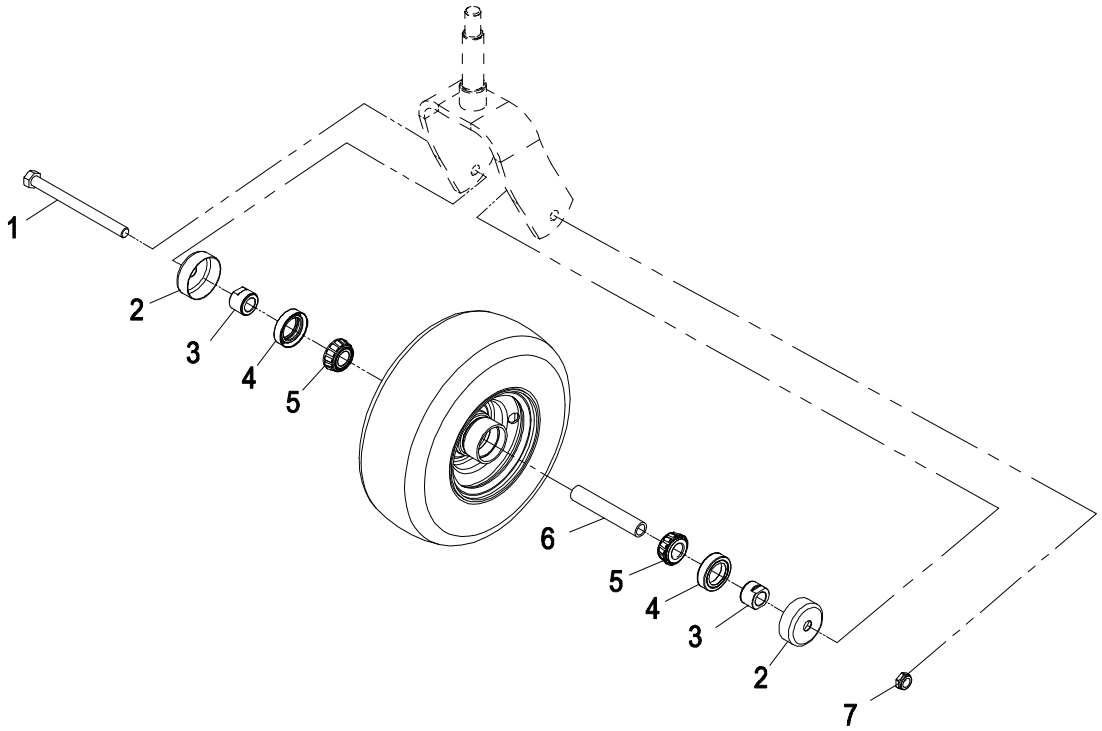

Item	Part No.	Description	Qty.
1	325-20	Screw, HH 1/2-13 x 6	2
2	103-2768	Guard, Seal	4
3✚	103-3051	Spacer, Nut	4
4	103-0063	Seal, Double Lip	4

Item	Part No.	Description	Qty.
5	1-633585	Bearing, Cone Tapered Roller	4
6	103-3157	Axle, Caster	2
7	3296-45	Nut, Nyloc 1/2-13 Thin	2

✚ Use Pro-Lock, Nut Type (P/N 1-840022, .5ml tube) on spacer nut Item #3

DECK SUPPORT GROUP

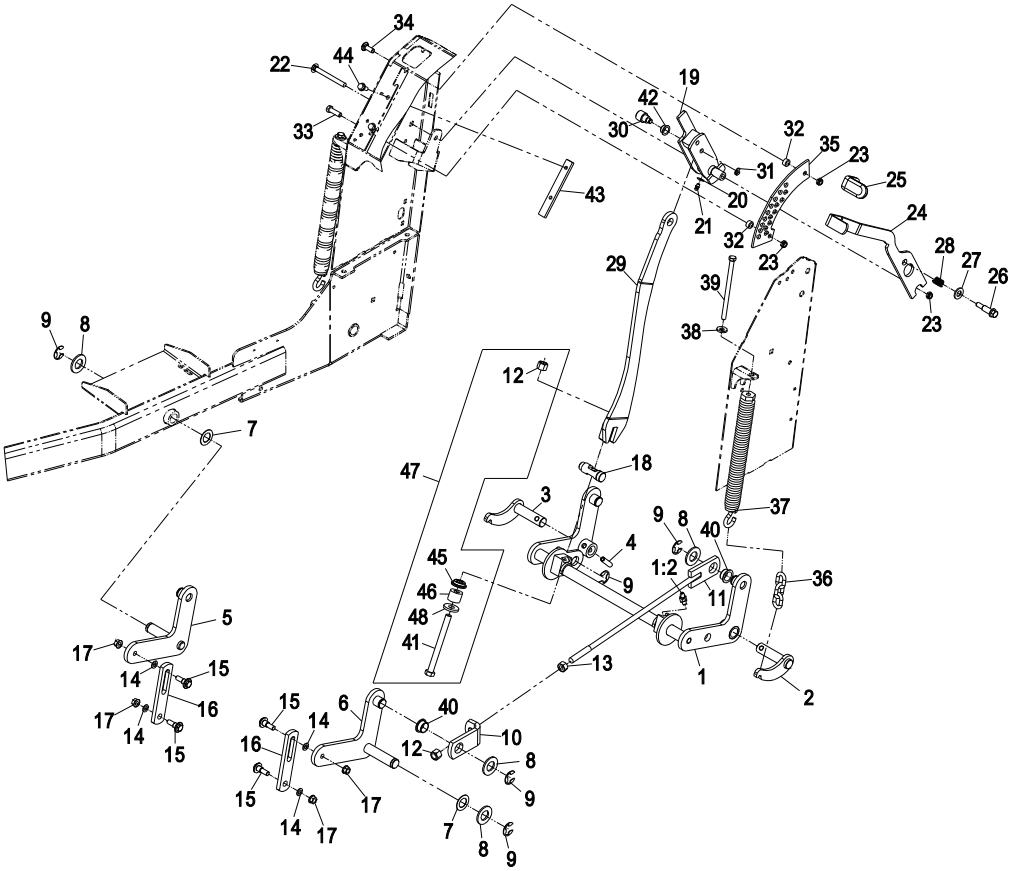

Item	Part No.	Description	Qty.
1	116-3103	Asm, Rear Cross-shaft	1
1:2	302-11	Zerk, 45° 1/4-28	2
2	116-3104-01	Asm, Pivot Shaft LH	1
3	116-3105-01	Asm, Pivot Shaft RH	1
4	116-3107	Pin-Spiral	2
5	117-0489-01	Asm, RH Lift	1
6	117-0488-01	Asm, LH Lift	1
7	110-6767	Washer-Thrust	2
8	3256-29	Washer, 7/8 SAE	6
9	32151-103	E-Ring	7
10	116-2901	Bracket-Lift Rod	2
11	116-2902	Lift Rod Asm	2
12	3296-23	Nut, Nyloc 1/2-13	3
13	3217-9	Nut, Hex 1/2-13	2
14	40-1940	Washer	4
15	109-9840	Screw, Hex Flange 3/8-16 x .80	4
16	117-0519	Link-Lift	2
17	32128-21	Nut, 3/8-16 Flanged Side Lock	4
18	114-5274	Pin-Hoc	1
19	114-3512	Asm, HOC Handle	1
20	3256-22	Washer, 1/4 SAE	1
21	302-5	Zerk 1/4-28 Str Thrd Forming	1
22	3231-24	Bolt, Carriage 3/8-16 x 3 3/4	1
23	3296-59	Nut, Nyloc 3/8-16 Thin	3
24	114-1878-03	Lever-HOC	1

Item	Part No.	Description	Qty.
25	1-633268	Grip-Lever, Brake	1
26	66-0561	Screw-Shoulder	1
27	3256-26	Washer, 1/2 SAE	1
28	65-9940	Spring	1
29	116-2939	Bar-Lift	1
30	116-3048	Hub-Pivot	1
31	32151-47	Ring-Retaining	1
32	111044	Bushing	2
33	323-7	Screw, HH 3/8-16 x 1 1/4	1
34	3231-22	Bolt, Carriage 3/8-16 x 1	1
35	114-5307	Bracket-Hoc	1
36	103-9859	Chain-Decklift	2
37	116-0886	Extension Spring Asm	2
38	98-5975	Washer, Spring Disc 3/8	2
39	323-58	Bolt, HH 3/8-16 x 6 Tap	2
40	116-2909	Bearing-Flange	4
41	325-22	Screw, HH 1/2-13 x 5 1/2	1
42	116-3047	Bearing-Flange	1
43	116-3124	Skid-Lift Handle	1
44	32144-11	Screw, HWH 5/16-18 x 3/4 TF	2
45	119-7332	Seat, Spring	1
46	116-3241	Spring, Urethane	1
47	116-4509	Asm, Spring	1
48	92-2651	Washer	1

Exmark red touch up paint (spray paint – P/N 1-850337 - .6 oz liquid bottle – P/N 103-9140)
Exmark black touch up spray paint – gloss black.

CONTROLS GROUP

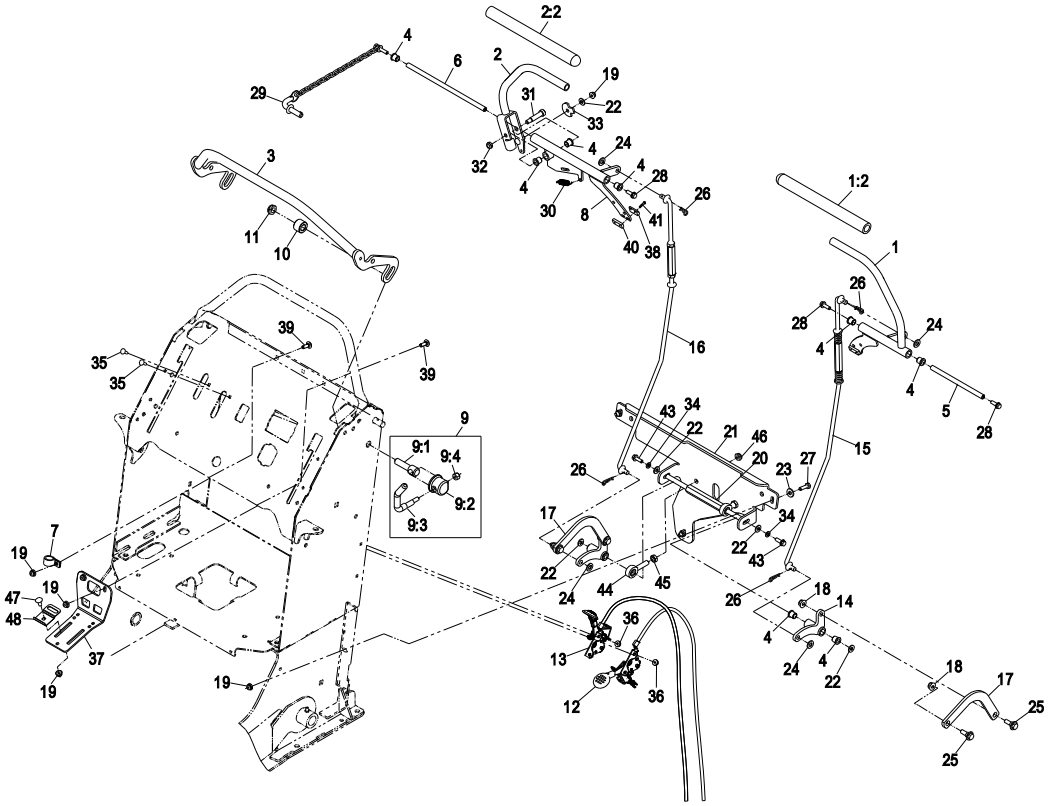

Item	Part No.	Description	Qty.
1	116-2677	Lever Asm, LH	1
1:2	116-2357	Grip, Handle Control	1
2	116-2356	Lever Asm, RH	1
2:2	116-2357	Grip, Handle Control	1
3	116-1858-03	Tube, Front Speed Adjust	1
4	103-9928	Bearing	10
5	114-0260	Shaft-Pivot	1
6	114-1904	Shaft-Pivot	1
7	2412-87	Clamp-Cable	1
8	116-2679-03	Asm, Control Motion RH	1
9	107-1664	Asm, Lever	2
9:1	106-3239	Screw, Lock	1
9:2	107-1644	Cap, Lock	1
9:3	106-3241	Lever, Lock	1
9:4	3296-29	Nut-Nyloc 5/16-18	1
10	116-2319	Spacer-Clamp	2
11	3296-45	Nut, Nyloc 1/2-13 Thin	2
12	116-3277	Control-Throttle	1
13	116-2309	Control-Choke	1
14	116-2675	Lever-Bellcrank, Motion	2
15	116-3323	Linkage-Tracking Control, LH	1
16	116-3324	Linkage-Motion Control, RH	1
17	116-2671	Link-Bellcrank, Pump	2
18	104-8300	Nut, Nyloc 5/16-18 Flg	4
19	104-7201	Nut, Nyloc 1/4-20 Flg	9
20	116-3119	Shaft-Bellcrank Pivot	1
21	116-3202-03	Bracket-Bellcrank	1

Item	Part No.	Description	Qty.
22	3256-22	Washer, 1/4 SAE	5
23	3256-2	Washer, 1/4 Std	3
24	3256-23	Washer, 5/16 SAE	4
25	116-2670	Screw, Shoulder HHF 5/16-18 x .96	4
26	1-806003	Hairpin, Cotter	4
27	321-5	Screw, HH 1/4-20 x 7/8	3
28	3234-4	Screw, HH FLG 1/4-20 x 3/4	3
29	114-0409	Asm, HOC Pin	1
30	114-0249	Spring-Extension	1
31	114-0239	Screw, Shoulder 5/16-18 x 1/2	1
32	3296-47	Nut, Nyloc 5/16-18 Thin	1
33	114-0268	Cam-Lever (Handle Stop)	1
34	3253-3	Washer, Lock 1/4	2
35	1-807533	Bolt, Carriage #10-24 x 5/8	4
36	3290-148	Nut, Whizlock #10-24	4
37	116-4572	Bracket-Reed Switch	1
38	116-2832	Actuator-Switch, Reed	2
39	3229-1	Bolt, Carriage 1/4-20 x 3/4	3
40	116-3227	Plate, Tapped	2
41	116-3330	Screw, HH #4-40 x 1/2 W/Nylon	4
43	117-8304	Screw, Hex Flange 1/4-20 x 3/4	2
44	1-613204	Balljoint	2
45	3220-3	Nut, Jam 3/8-24	2
46	3296-5	Nut, Nyloc 3/8-24 Thin	2
47	3229-11	Bolt, Carriage 1/4-20 x 5/8	2
48	116-4573	Clamp, Reed Switch	2

Exmark black touch up spray paint – gloss black

PARK BRAKE GROUP

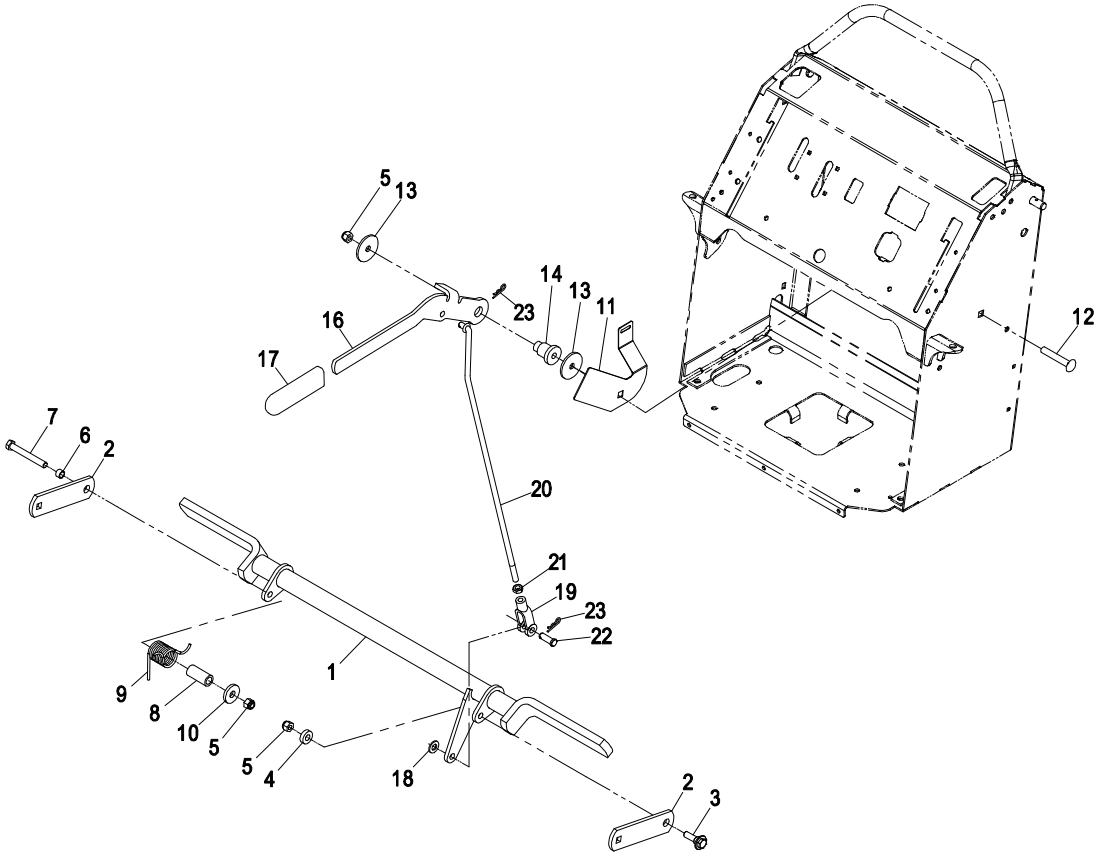

Item	Part No.	Description	Qty.
1	114-5187-03	Brake Asm	1
2	114-5186-01	Support-Brake	2
3	614672	Screw, Shoulder 3/8-16 x 1.295	1
4	5-0652	Spacer	1
5	3296-39	Nut, Nyloc 3/8-16	3
6	117-9684	Spacer	1
7	323-14	Screw, HH 3/8-16 x 3	1
8	117-9683	Spacer	1
9	117-9682	Spring-Torsion	1
10	1-373034	Washer	1
11	117-0452-03	Plate-Switch, Brake	1

Item	Part No.	Description	Qty.
12	3231-44	Bolt, Carriage 3/8-16 x 2 1/2	1
13	63-7400	Washer-Rebound	2
14	106-3214	Mount-Pulley	1
16	117-5759-03	Lever-Brake	1
17	1-633268	Grip-Lever, Brake	1
18	3256-24	Washer, 3/8 SAE	1
19	1-633131	Yoke-Linkage, Brake	1
20	114-5196	Rod-Brake	1
21	3220-3	Nut, Jam 3/8-24	1
22	283-2	Pin, Clevis 3/8 x 1 1/6	1
23	3290-307	Pin-Hair	2

Exmark red touch up paint (spray paint – P/N 1-850337 - .6 oz liquid bottle – P/N 103-9140).
Exmark black touch up spray paint – gloss black.

PLATFORM GROUP

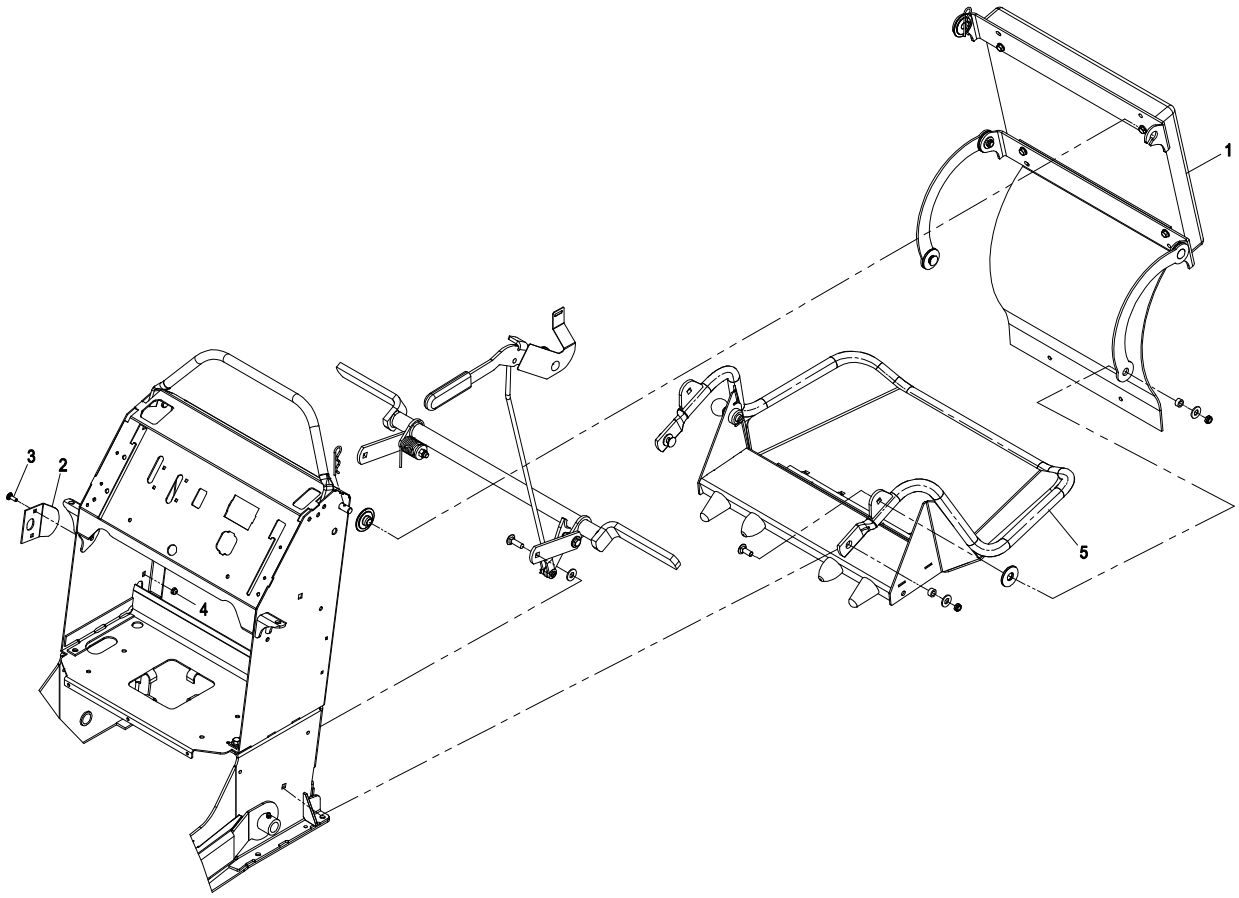

Item	Part No.	Description	Qty.
1	116-1803	Asm, Cushion	1
2	119-7312	Plate-Strike	1
3	3229-11	Bolt, Carriage 1/4-20 x 5/8	2

Item	Part No.	Description	Qty.
4	104-7201	Nut, Nyloc 1/4-20 Flg	2
5	116-1804	Asm, Platform	1

CUSHION ASSEMBLY – 116-1803

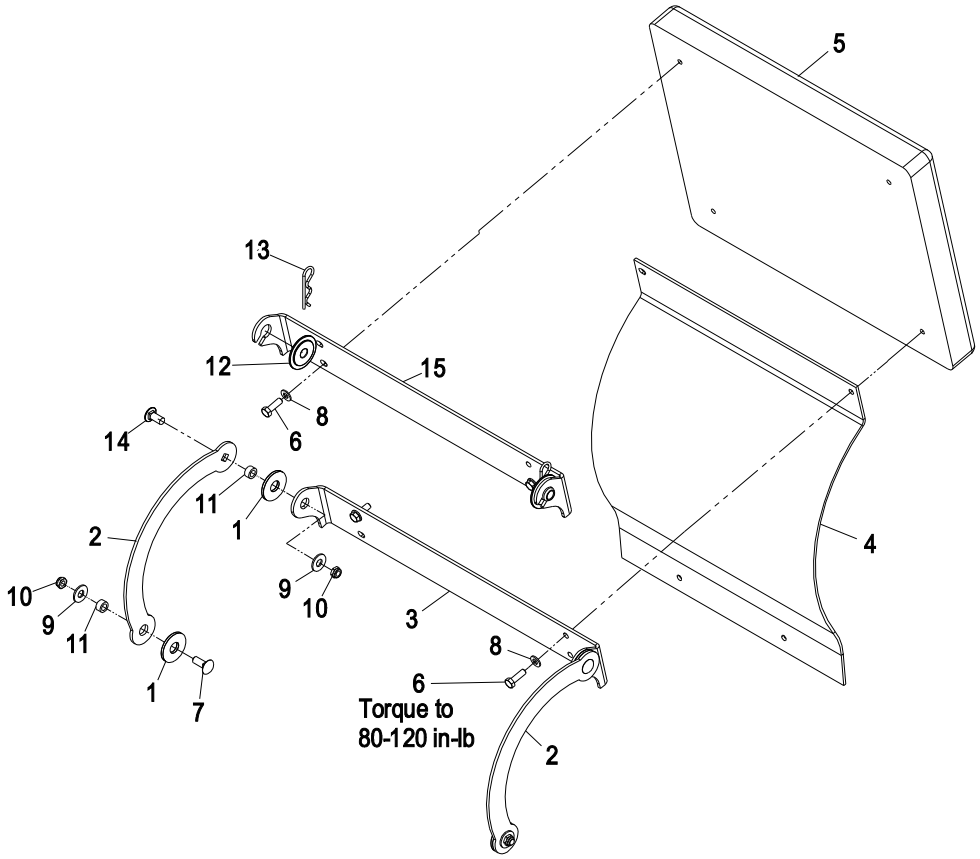

Item	Part No.	Description	Qty.
1	114-0463	Washer	4
2	114-1915-03	Link-Pad	2
3	116-2061-03	Hinge-Pad	1
4	116-3406	Shield-Rear	1
5	116-1790	Pad, Grey Cushion	1
6	116-0648	Screw, HH 5/16-18 x 1 W/Patch	4
7	3231-2	Bolt, Carriage 3/8-16 x 1	2
8	3256-23	Washer, 5/16 SAE	4

Item	Part No.	Description	Qty.
9	3256-4	Washer, 3/8 Std	4
10	3296-59	Nut, Nyloc 3/8-16 Thin	4
11	111044	Bushing	4
12	116-2886	Slide-Bushing	2
13	3290-355	Pin-Hair	2
14	3231-27	Bolt, Carriage 3/8-16 x 7/8	2
15	116-2757-03	Hinge-Pad	1

Exmark black touch up spray paint – gloss black.

PLATFORM ASSEMBLY – 116-1804

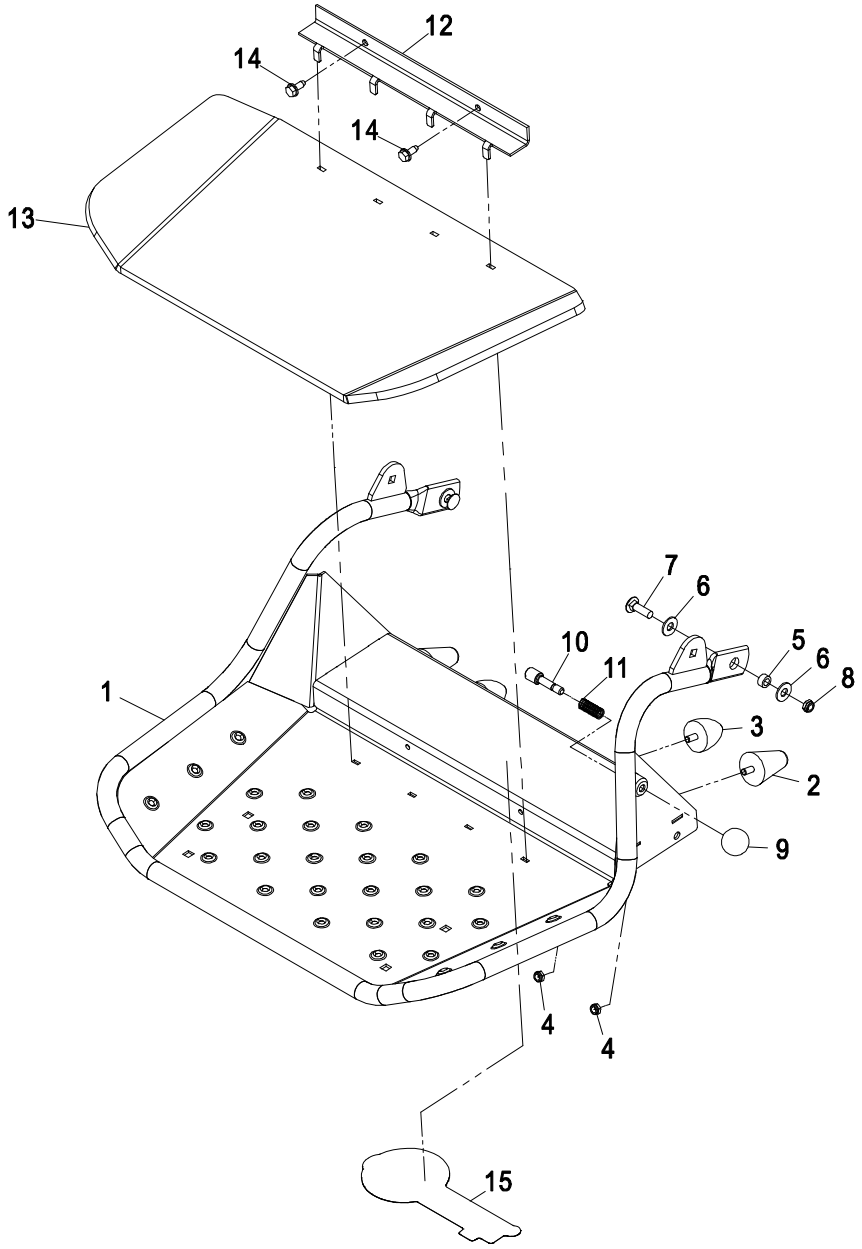

Item	Part No.	Description	Qty.
1	117-9641-03	Asm, Platform	1
2	114-1925	Bumper-Rubber	2
3	114-1926	Bumper-Rubber	2
4	3296-47	Nut, Nyloc 5/16-18 Thin	4
5	111044	Bushing	2
6	3256-4	Washer, 3/8 Std	4
7	3231-25	Bolt, Carriage 3/8-16 x 1 1/4	2
8	3296-59	Nut, Nyloc 3/8-16 Thin	2

Item	Part No.	Description	Qty.
9	1-603175	Knob, Ball	1
10	114-5288	Pin-Latch	1
11	114-5348	Spring	1
12	114-1920-03	Clamp-Shield	1
13	114-5349	Mat-Foot	1
14	32144-70	Screw, HWH 5/16-18 x 3/4 TF	2
15	1-653546	Decal, Exmark Logo	1

Exmark black touch up spray paint – gloss black.

FUEL TANK GROUP

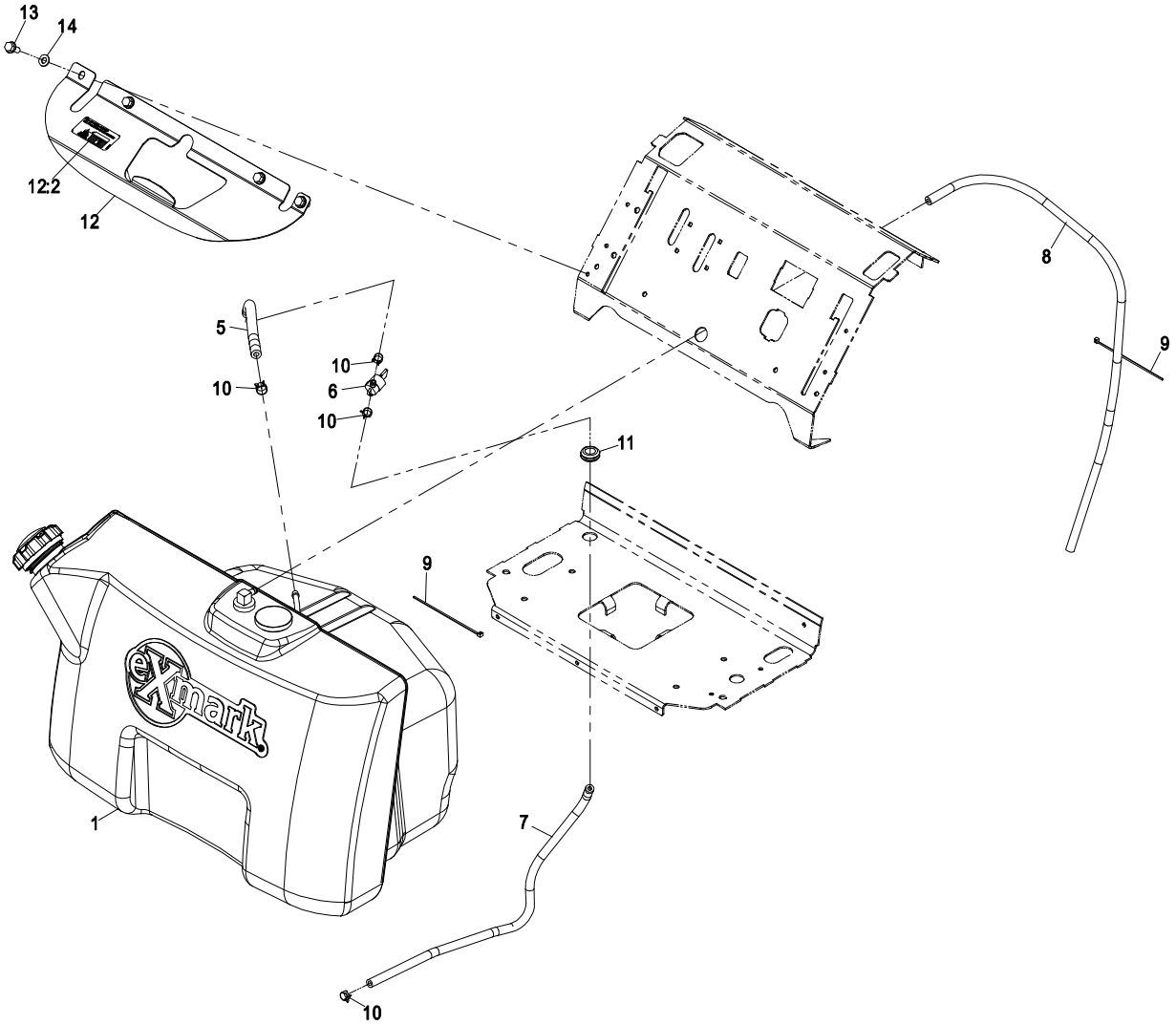

Item	Part No.	Description	Qty.
1	116-3417	Asm, Tank- 8 Gal	1
	116-3517	Asm-Tank CA Units Only	1
5	107-9297	Hose-Fuel (.25 X 8.50)	1
6	1-603770	Valve, Fuel	1
7	109-0301	Hose-Fuel (.25 X 22.00)	1
8	109-3491	Hose, Fuel Line 30"	1
9	1-303287	Tie, Cable 5 1/2 (Small)	2

Item	Part No.	Description	Qty.
10	2412-98	Clamp, Hose	4
11	112-7069	Grommet (5/8 X 3/16)	1
12	116-3088	Bracket-Tank W/Decal	1
12:2	116-3290	Decal, Fuel Fill	1
13	32144-11	Screw, HWH 5/16-18 x 3/4 TF	4
14	3256-70	Washer-Flat	4

FUEL TANK ASSEMBLY – 116-3417

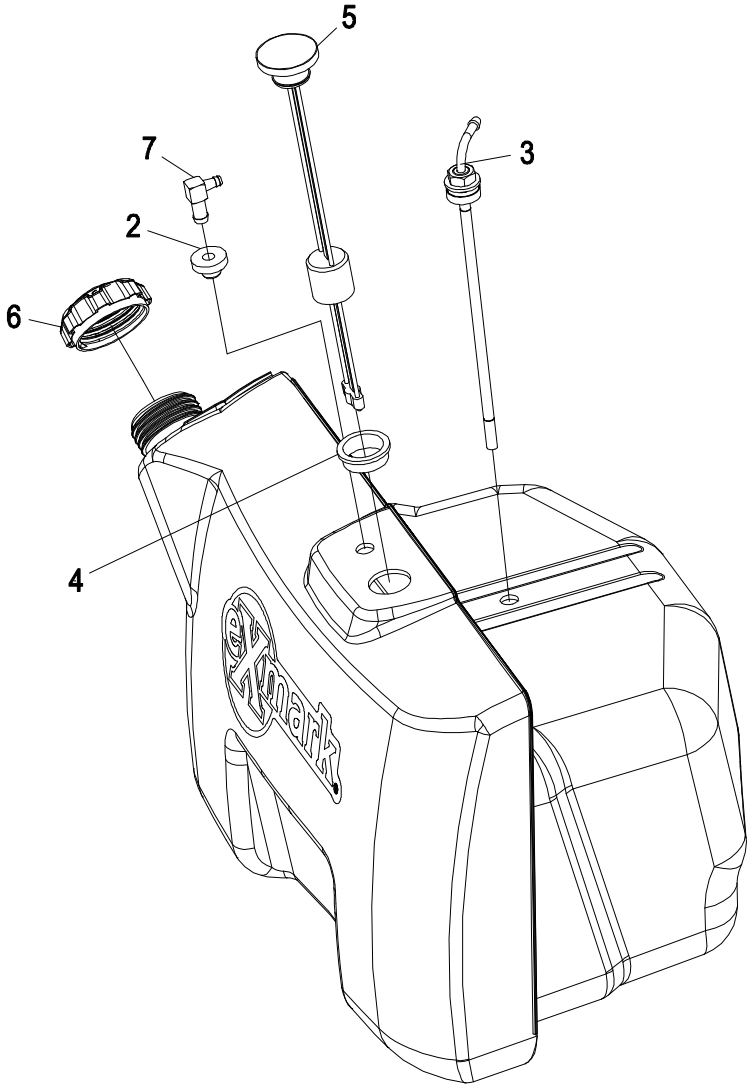

Item	Part No.	Description	Qty.
2	46-6560	Bushing	1
3	116-3408	Fitting-Fuel, Screen Tube	1
4	95-8972	Grommet	1

Item	Part No.	Description	Qty.
5	117-9719	Gauge-Fuel	1
6	109-9619	Cap-Fuel	1
7	1-643172	Elbow-90 Deg.	1

FUEL TANK ASSEMBLY – 116-3517

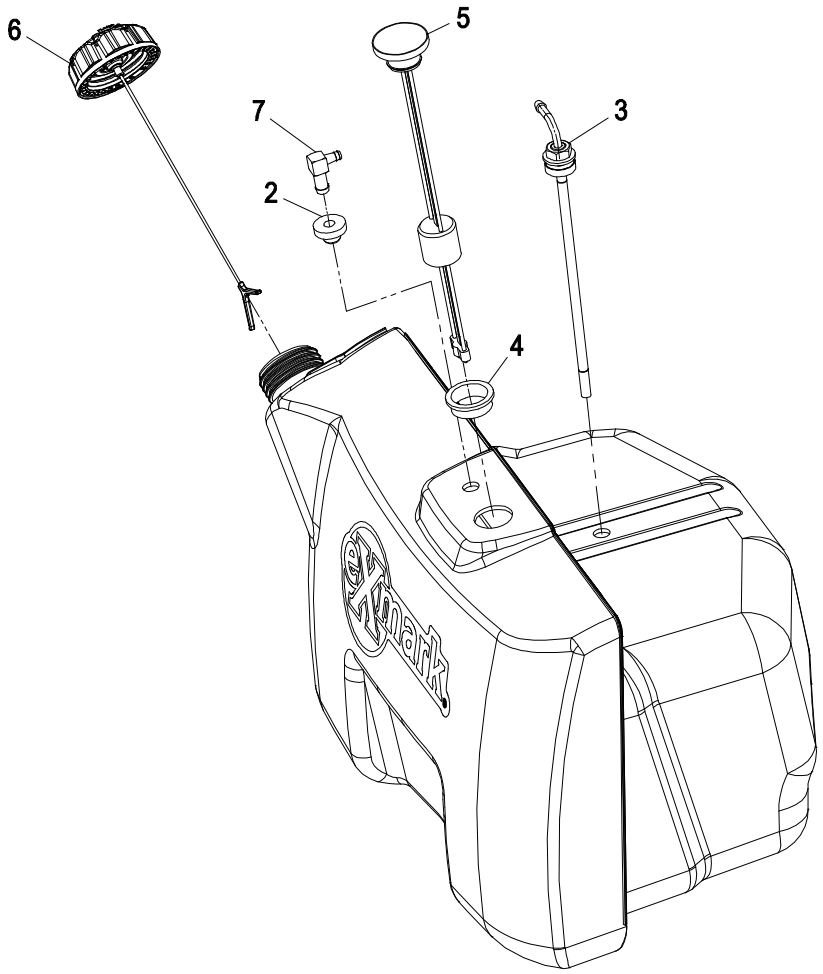

Item	Part No.	Description	Qty.
2	46-6560	Bushing	1
3	116-3408	Fitting-Fuel, Screen Tube	1
4	95-8972	Grommet	1

Item	Part No.	Description	Qty.
5	117-9719	Gauge-Fuel	1
6	116-1704	Cap-Ratcheting Fuel	1
7	1-643172	Elbow-90 Deg.	1

CARBON CANISTER GROUP – CA UNITS ONLY

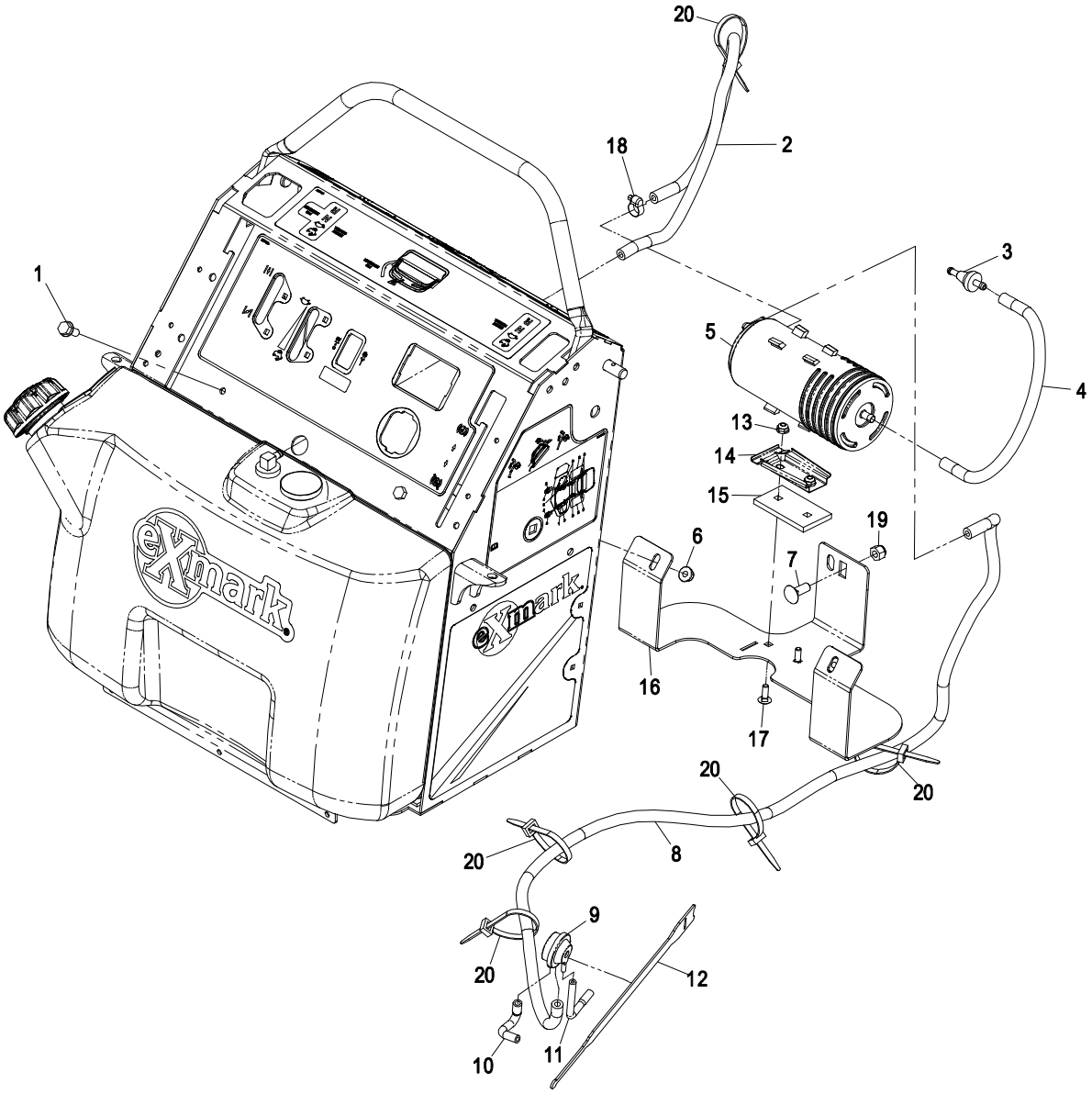

Item	Part No.	Description	Qty.
1	32144-11	Screw-HWH 5/16-18 x 3/4 TF	2
2	110-7501	Hose-Fuel	1
3	71-9280	Filter-Fuel	1
4	114-3766	Hose-Fuel	1
5	117-1221	Canister-Carbon, 800cc	1
6	104-8300	Nut-Nyloc 5/16-18 Flg	2
7	3231-2	Bolt-Carriage 3/8-16 x 1	1
8	63-9720	Hose-Fuel	1
9	116-2232	Valve-Control, Vacuum	1
10	119-8502	Hose-Formed, Low Vacuum Port	1

Item	Part No.	Description	Qty.
11	119-8501	Hose-Formed, High Vacuum Port	1
12	116-2469	Strap-Velcro, Cable Tie	1
13	104-7201	Nut-Nyloc 1/4-20 Flg	2
14	114-0292	Bracket-Canister, Carbon	1
15	119-7279-03	Plate-Canister, Carbon	1
16	119-7228-03	Tank-Support	1
17	3229-1	Bolt-Carriage 1/4-20 x 3/4	2
18	2412-108	Clamp-Hose	1
19	3296-39	Nut-Nyloc 3/8-16	1
20	3290-378	Tie-Cable	4

ENGINE GROUP – 20-24HP KAWASAKI

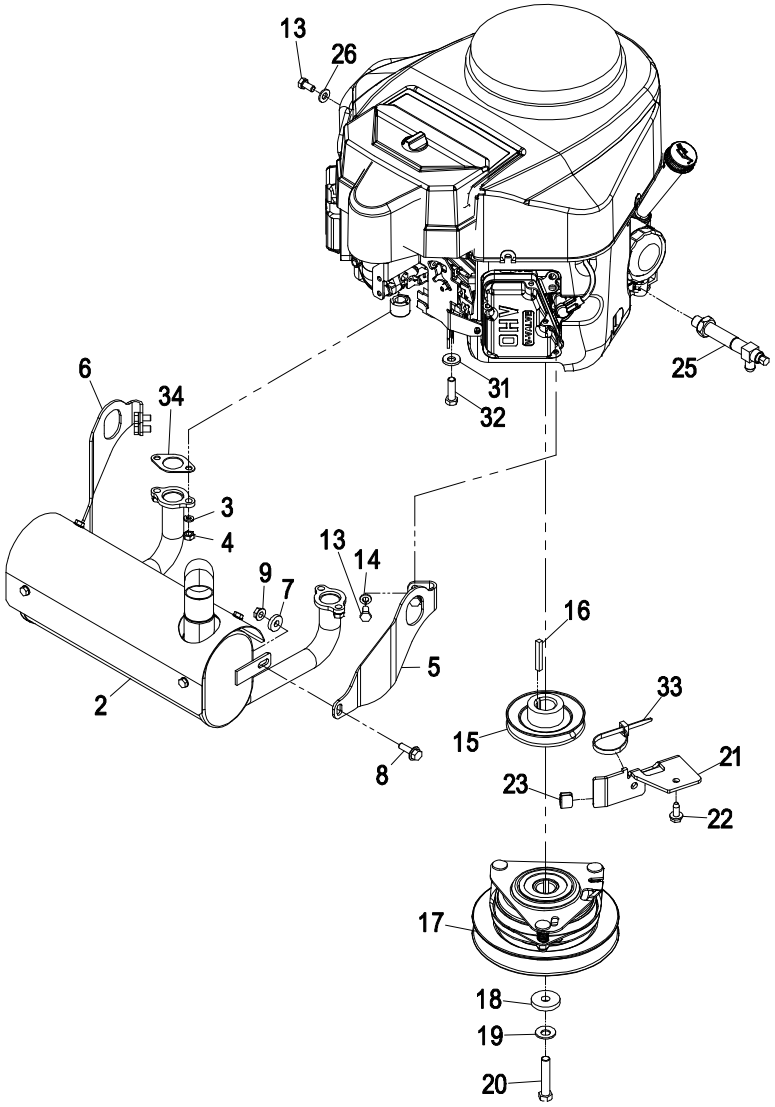

Item	Part No.	Description	Qty.
2	116-2351	Muffler-Kawasaki (20HP Units)	1
	116-2352	Muffler-Kawasaki (24HP Units)	1
3	114-3550	Washer-Spring Lock, M8	4
4	114-3549	Nut, M8	4
5	116-2353	Bracket-Muffler Mount, LH	1
6	116-2354	Bracket, Muffler Mount RH	1
7	104-7658	Spacer	2
8	3234-29	Screw, HH FLG 5/16-18 x 1	2
9	32128-25	Nut, Hex 5/16-18 Side Lock	2
13	33114-016	Screw, HH M8-1.25 x 16mm	5
14	3253-4	Washer, Lock 5/16	4
15	112-7067	Pulley	1
16	608006	Key-Square	1

Item	Part No.	Description	Qty.
17	105-2635	Asm, Clutch / Brake	1
18	107-4136	Washer	1
19	1-603610	Washer, Spring Disc 7/16	1
20▲	3212-9	Screw, HH 7/16-20 x 2 1/4	1
21	117-9708-01	Bracket-Stop, PTO	1
22	32144-70	Screw, HWH 5/16-18 x 3/4 TF	1
23	109-3765	Bumper	1
25	116-2618	Drain-Oil, Valve	1
26	33094-00	Washer	1
31	98-5975	Washer, Spring Disc 3/8	4
32	323-7	Screw, HH 3/8-16 x 1 1/4	4
33	3290-378	Tie, Cable	1
34	1-653313	Gasket-Exhaust	2

Exmark red touch up paint (spray paint – P/N 1-850337 - .6 oz liquid bottle – P/N 103-9140)

▲ Use Pro-Lock, Nut Type (P/N 1-840022, .5ml tube) on clutch bolt.

GROUND DRIVE GROUP

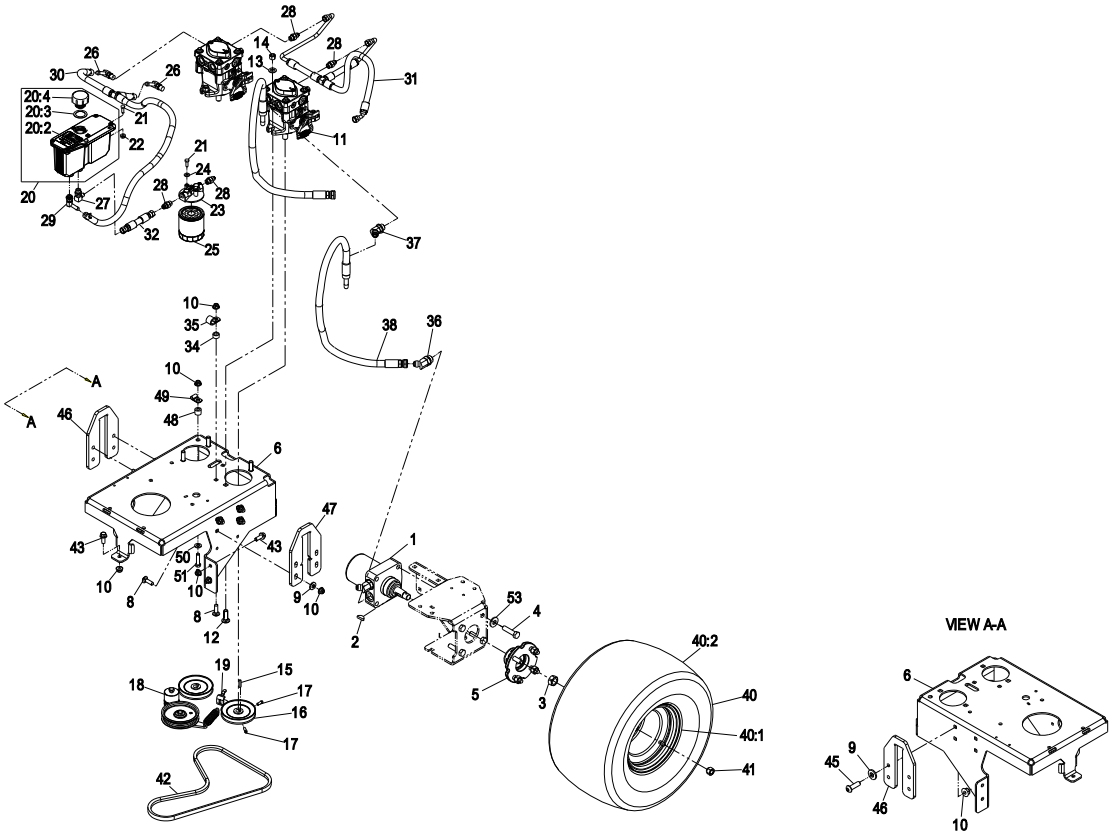

Item	Part No.	Description	Qty.
1	114-0549	Asm, Hyd Motor	2
2	3257-8	Key-Woodruff (1/4 X 1)	2
3	85-7310	Nut-Motor, Wheel	2
4	325-8	Screw, HH 1/2-13 x 1 1/4	8
5	105-0800	Wheel Hub / Stud Asm	2
6	116-3215-01	Base-Engine	1
8	3231-25	Bolt, Carriage 3/8-16 x 1 1/4	8
9	98-5975	Washer, Spring Disc 3/8	8
10	104-8301	Nut, Nyloc 3/8-16 Flg	15
11	116-2572	Pump- Hydraulic	2
12	3232-3	Bolt, Carriage 7/16-14 x 1 1/2	4
13	3256-25	Washer, 7/16 SAE	4
14	3296-48	Nut, Nyloc 7/16-14	4
15	1-807272	Key, 5mm x 5mm x 25mm	2
16	105-5648	Pulley-Pump	2
17	3241-5	Screw-Set	4
18	116-2823	Asm, Pump Idler	1
19	117-0447-01	Bracket-Anchor, Spring	1
20	116-2066	Asm, Reservoir W/Decals	1
20:2	116-0404	Decal-Hydraulic Tank	1
20:3	103-1949	Gasket- Reservoir	1
20:4	103-1948	Cap-Reservoir	1
21	321-4	Screw, HH 1/4-20 x 3/4	4
22	32128-32	Nut, Hex 1/4-20 Side Lock	2
23	104-7836	Filter, Head	1
24	3256-22	Washer, 1/4 SAE	2
25	109-4180	Filter, 25 Micron Bi-Directional	1

Item	Part No.	Description	Qty.
26	100-4887	Fitting-Barbed, 90 Deg	2
27	103-1802	Fitting-Hyd, 90 Deg	1
28	103-2156	Adapter, Straight	4
29	103-1807	Fitting-Barbed, 45 Deg	1
30	116-2579	Tank Hose Asm	1
31	116-2650	Hose Assembly- Charge	1
32	116-2604	Asm, Hydraulic Hose	1
34	1-653069	Spacer-Wheel	1
35	1-633396	Clip, Loom 5/8	1
36	1-523222	Fitting-Hyd, 45 Deg	4
37	1-523221	Fitting-Hyd, 45 Deg	4
38	116-2944	Wheel Motor Hose Asm	4
40	117-0429	Wheel Asm (20 X 10.00-8)	2
40:1	106-8133	Wheel	1
40:2	117-0428	Tire	1
41	242-50	Nut, Lug 1/2-20	8
42	114567	Belt	1
43	3234-42	Screw HHF 3/8-16 x 1	5
45	3274-63	Screw-Button Head 3/8-16 x 1 1/4	1
46	116-3547	Plate-Lift, RH (Red)	1
47	116-3546	Plate-Lift, LH (Red)	1
48	108326	Spacer-Pivot	1
49	116-3362	Clip-Tube (.375)	1
50	3256-24	Washer, 3/8 SAE	1
51	323-8	Screw, HH 3/8-16 x 1 1/2	1
52✚	109-9828	Oil, Exmark Premium Hydro (32 oz)	2
53	1-513435	Washer-Spring Disc	8

Exmark red touch up paint (spray paint – P/N 1-850337 - .6 oz liquid bottle – P/N 103-9140)

✚ Not shown

PUMP IDLER ASSEMBLY – 116-2823

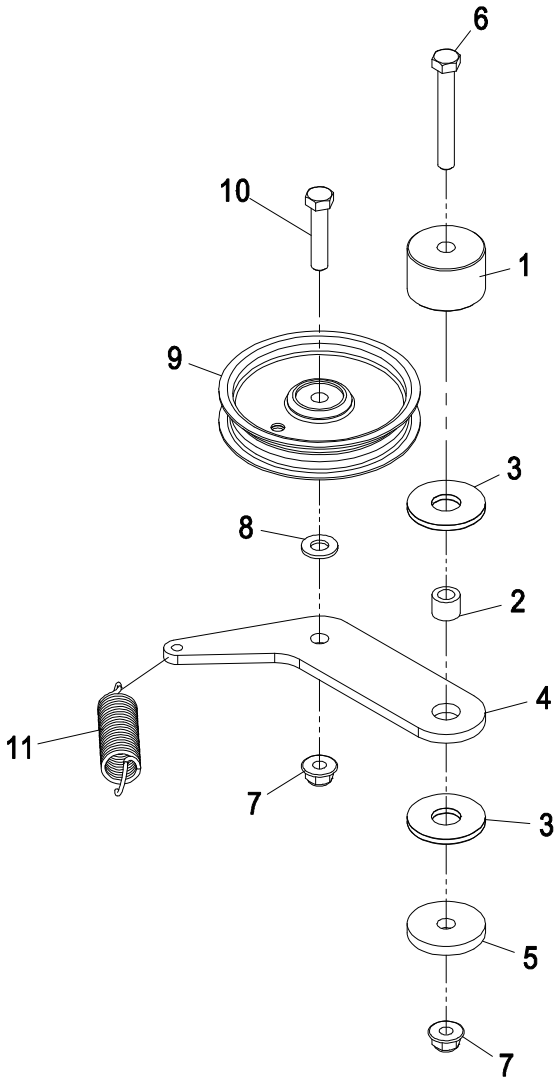

Item	Part No.	Description	Qty.
1	117-3568	Hub-Idler	1
2	1-413088	Spacer	1
3	114-0463	Washer-Friction, Composite	2
4	117-9707	Plate-Idler	1
5	110-9981	Washer-Plain	1
6	323-13	Screw, HH 3/8-16 x 2 3/4	1

Item	Part No.	Description	Qty.
7	104-8301	Nut, Nyloc 3/8-16 Flg	2
8	3256-24	Washer, 3/8 SAE	1
9	93-1622	Pulley-Idler	1
10	323-9	Screw, HH 3/8-16 x 1 3/4	1
11	108-4056	Spring-Extension	1

Exmark black touch up spray paint - gloss black.

▲ Use dielectric grease on all wiring harness connectors.

ELECTRICAL GROUP

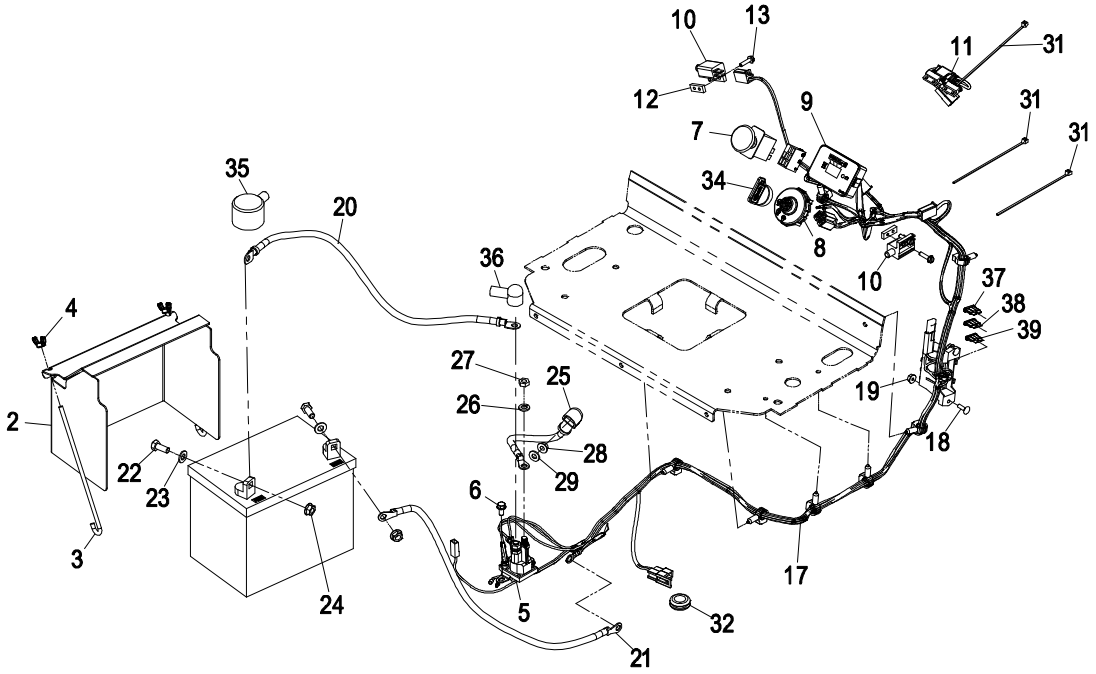

Item	Part No.	Description	Qty.
2	117-0543-01	Cover-Battery (Red)	1
3	1-633651	Bolt-Holddown	2
4	1-543792	Wingnut, Nyloc 1/4-20	2
5	117-1197	Solenoid (12V)	1
6	32144-4	Screw, HWH 1/2-20 x 1/2 Taptite	2
7	114-0279	Switch-PTO	1
8	117-2222	Switch-Ignition	1
9	115-4180	Module-Meter, Hour	1
10	1-513152	Switch, N.C.	2
11	116-2833	Harness-Switch, Reed	1
12	1-633181	Plate, Tapped	2
13	32105-13	Screw, HWH #10-24 x 3/4	4
17	116-2662	Harness, Wiring	1
18	1-807533	Bolt, Carriage #10-24 x 5/8	2
19	3290-148	Nut, Whizlock #10-24	2
20	109-7653	Asm, Positive Battery Cable	1
21	105-0836	Cable-Battery, Black	1

Item	Part No.	Description	Qty.
22	322-3	Screw, HH 5/16-18 x 3/4	2
23	3256-23	Washer, 5/16 SAE	2
24	109-5715	Nut, Hex Flange 5/16-18	2
25	106-8268	Cable-Battery, Red	1
26	3253-4	Washer, Lock 5/16	2
27	3220-2	Nut, Jam 5/16-24	2
28	32128-33	Nut, Whizlock 1/4-20	1
29	3256-22	Washer, 1/4 SAE	1
31	1-303287	Tie, Cable 5 1/2 (Small)	3
32	112-7069	Grommet (5/8 X 3/16)	1
34	103-2106	Key, Exmark Logo	1
	1-603511	Key, Ignition	1
35	109-2407	Insulator, Battery	1
36	1-543393	Insulator, Solenoid	1
37	218-578	Fuse, 10 amp	1
38	109102	Fuse, 25 amp	1
39	109103	Fuse, 30 amp	1

Exmark black touch up spray paint - gloss black.

▲ Use dielectric grease on all wiring harness connectors.

DECAL GROUP

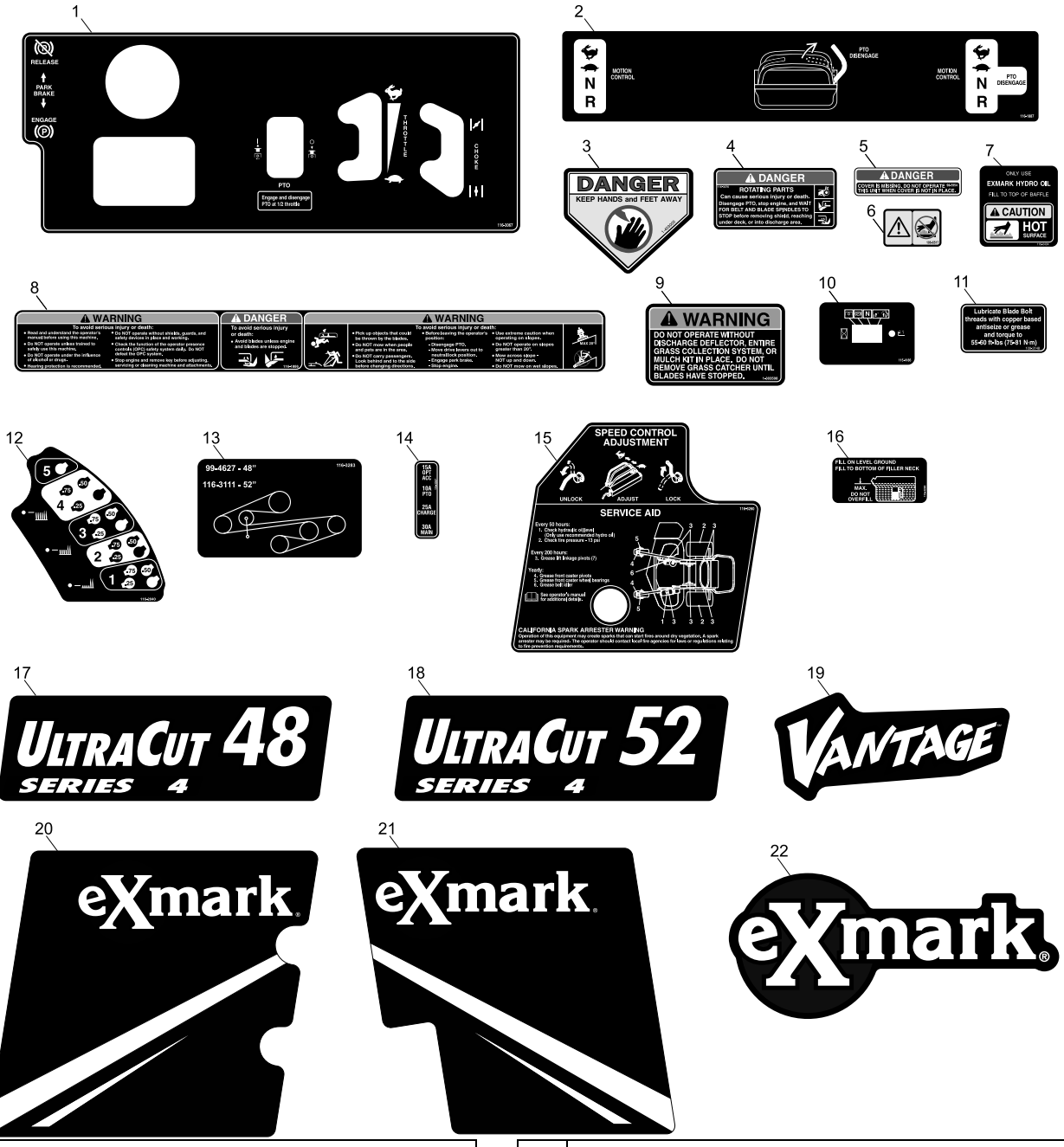

Item	Part No.	Description	Qty.
1	116-3067	Decal, Control Panel	1
2	116-1887	Decal, Motion Control	1
3	1-403005	Decal, Danger	2
4	116-3076	Decal, Rotating Parts	2
5	98-5954	Decal, Cover Missing	2
6	106-5517	Decal, Surface Hot	1
7	116-0404	Decal, Hydraulic Tank	1
8	116-1886	Decal, Top Console	1
9	1-303508	Decal, Warning Discharge	1
10	115-4186	Decal, Hour Meter	1
11	109-3148	Decal, Bolt Torque	1

Item	Part No.	Description	Qty.
12	116-2040	Decal, Height of Cut	1
13	116-3283	Decal, Belt Routing	1
14	116-3267	Decal, Fuse	1
15	116-3260	Decal, Service Aid	1
16	116-3290	Decal, Fuel Fill	1
17	116-0033	Decal, UltraCut 48 Series 4	1
18	116-0034	Decal, UltraCut 52 Series 4	1
19	116-3137	Decal, Vantage Logo	1
20	116-1908	Decal, LH Panel	1
21	116-1909	Decal, RH Panel	1
22	1-653546	Decal, Exmark Logo	1

ELECTRICAL DIAGRAM

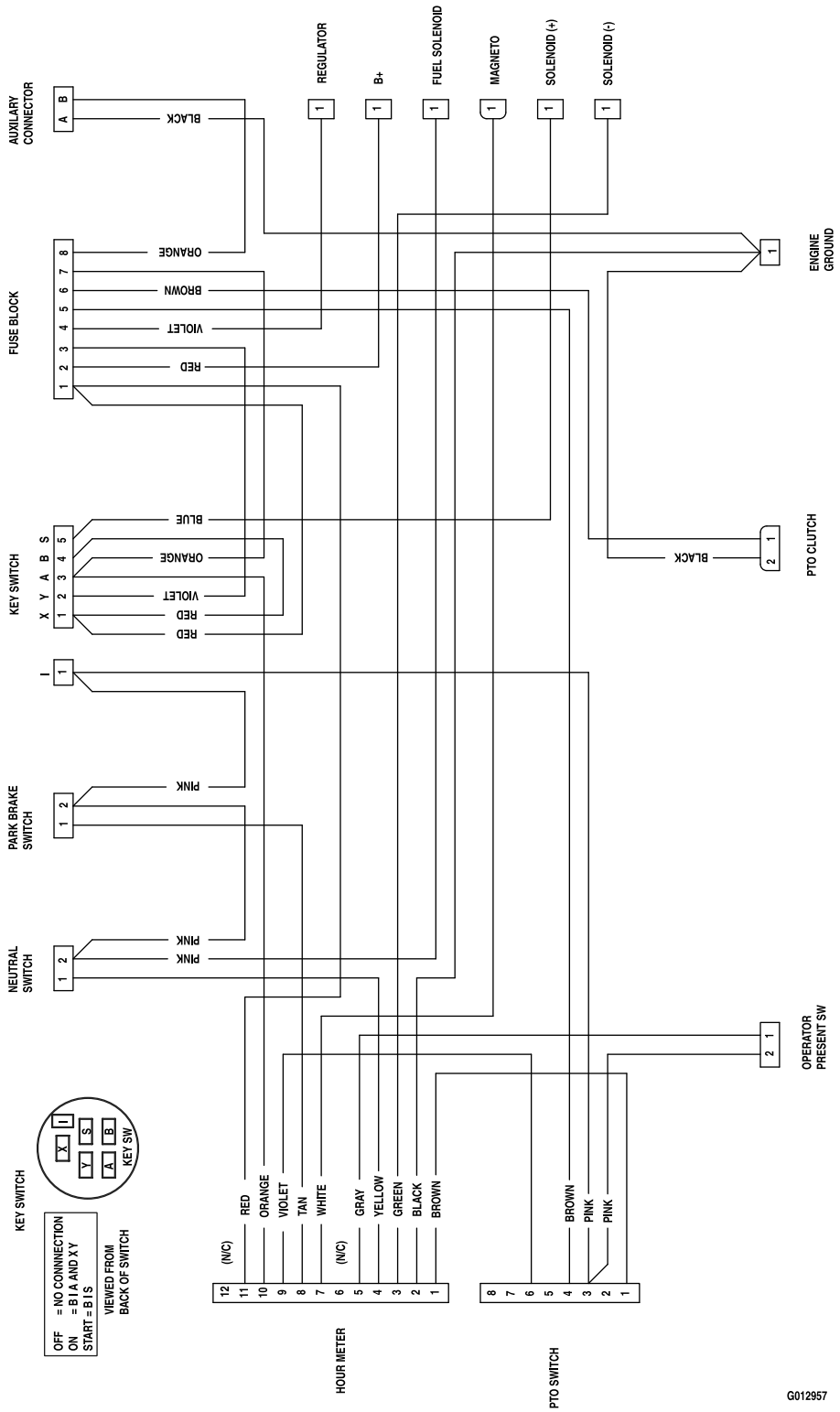

ELECTRICAL LOGIC SCHEMATIC

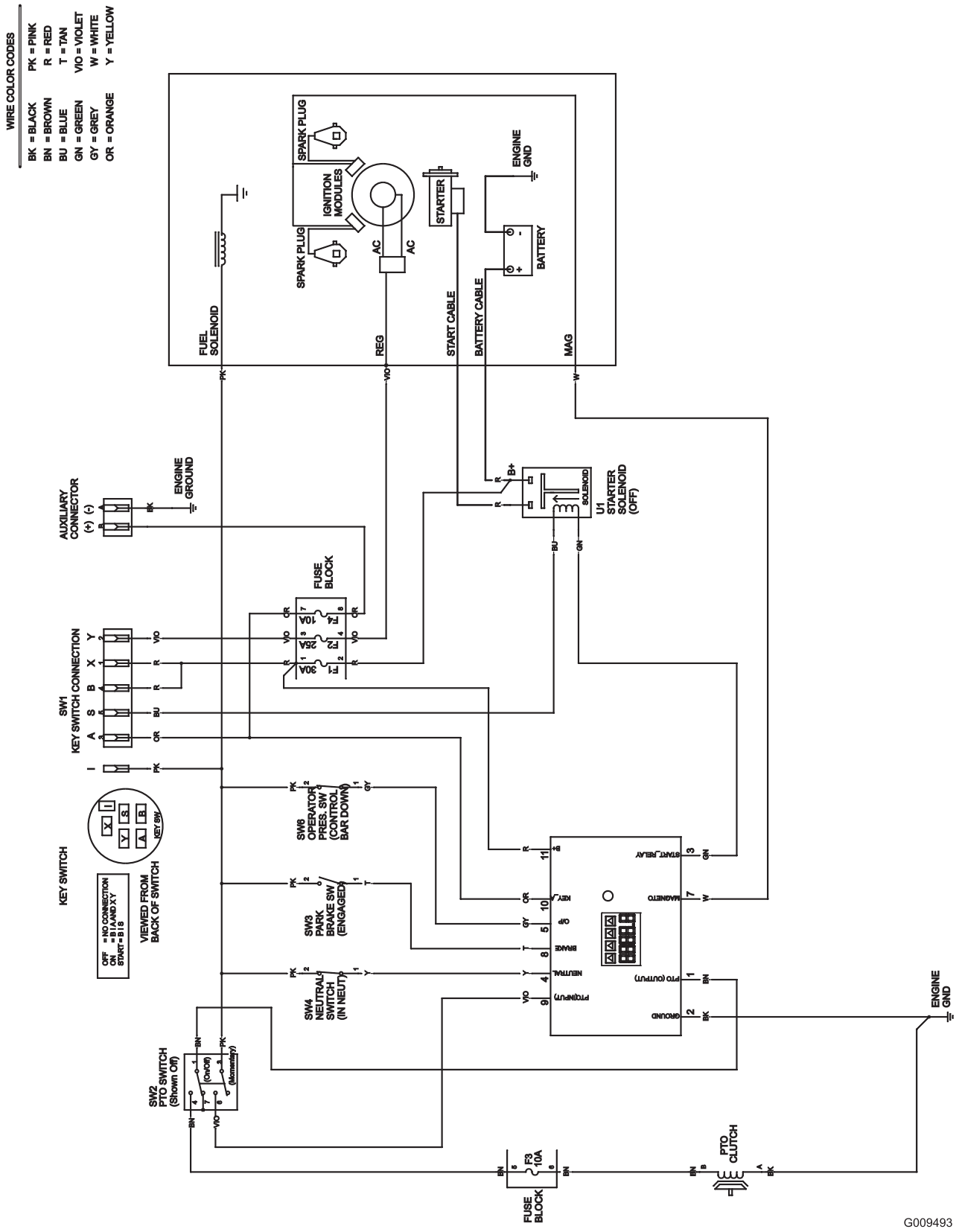

SERVICE RECORD

Date	Description of Work Done	Service Done By

NEW EXMARK PREMIUM HYDRO OIL

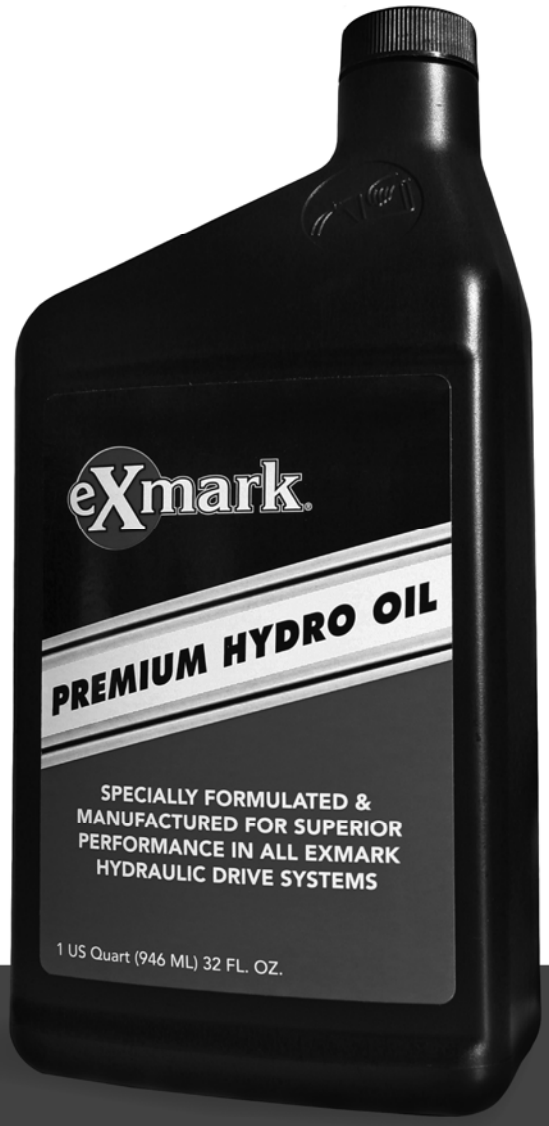

BENEFITS

- Designed & manufactured with superior anti-wear protection
- Superior thermal stability
- Consistent hydro performance
- Superior shear resistance under heavy loads
- Field tested & proven performance
- Twice the shear stability of competing oils
- Enhanced control performance
- Specially formulated for any Exmark hydraulic system

NOW AVAILABLE FOR PURCHASE

Part No. 109-9828

eXmark®

SEE EXMARK'S COMPLETE LINE OF ACCESSORIES

MID-MOUNT RIDING ACCESSORIES

CUSTOM RIDE SEAT SUSPENSION SYSTEM
FULL SUSPENSION SEAT
DECK LIFT ASSIST KIT
HITCH KIT
LIGHT KIT
12V POWER PORT
MICRO-MULCH SYSTEM
OPERATOR CONTROLLED DISCHARGE
ROLL OVER PROTECTION SYSTEM (ROPS)
SUN SHADE
TRASH CONTAINER
TURF STRIPER
ULTRA VAC COLLECTION SYSTEM
ULTRA VAC QUICK DISPOSAL SYSTEM

OUT-FRONT RIDING ACCESSORIES

CUSTOM RIDE SEAT SUSPENSION SYSTEM
DUAL-TAIL WHEEL
FLOOR PAN EXTENDER
HITCH KIT
LIGHT KIT
MICRO-MULCH SYSTEM
ROLL OVER PROTECTION SYSTEM (ROPS)
SNOW BLADE
SNOWBLOWER
SUN SHADE
TRASH CONTAINER
ULTRA VAC COLLECTION SYSTEM
ULTRA VAC QUICK DISPOSAL SYSTEM
WEATHER CAB

WALK-BEHIND ACCESSORIES

GRASS CATCHER
MICRO-MULCH SYSTEM
TURF STRIPER
STANDON

Place Model No. and Serial No. Label Here (Included in the Literature Pack or Fill in Below

Model No. _____

Serial No. _____

Date Purchased _____

Engine Model No. and Spec. No. _____

Engine Serial No. (E/No) _____

© 2012 Exmark Mfg. Co., Inc.
All Rights Reserved

Industrial Park Box 808
Beatrice, NE 68310
(402) 223-6300
Fax (402) 223-5489

Part No. 4500-545 Rev. E
Printed In USA

www.exmark.com