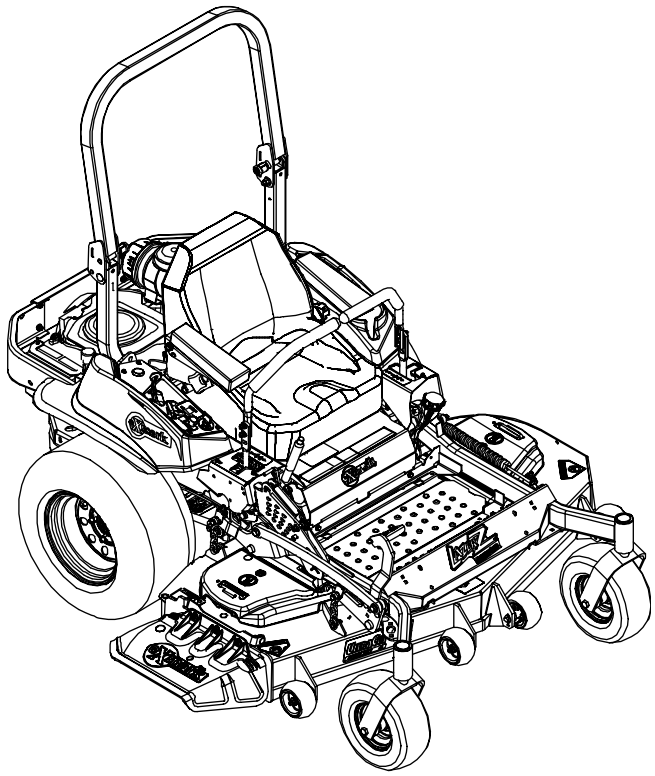

LAZER Z® MODELS
ADVANTAGE
SERIES X MODELS

Parts Manual

For Serial Nos.
850,000 & Higher
Lazer Z (LZAS Units)
Part No. 4500-564 Rev. D

EXMARK PARTS PLUS

PARTS OVERNIGHT OR FREE*

If your Exmark dealer does not have the Exmark part in stock, Exmark will get the parts to the dealer the next business day or the part will be FREE Guaranteed!! (Some restrictions apply. See your participating Exmark Dealer for details.)

WARNING

READ OPERATOR'S MANUAL BEFORE OPERATING OR SERVICING EXMARK EQUIPMENT.

TABLE OF CONTENTS

Description	Page
Brake Handle Assembly	25
Caster Wheel Assembly	18-19
Controls Group	22
Cutter Housing Assembly	5, 8, 11, 14
Decal Group	38
Deck Group	3-15
Deck Support Group	20
Deck Idler Assembly	15
Electrical Diagram	39-40
Electrical Group	37
Electrical Logic Schematic	41-42
Engine Group	30-33
Fuel Tank Group	28
Fuel Tank Assembly	29
Height of Cut Assembly	21
Hydraulic Group	34-35
Mainframe Group	16
Motion Control Group	23
Park Brake Group	24
Pump Idler Assembly	36
ROPS Assembly	17
Seat Group	26
Seat W/Tracks Assembly	27

48” DECK GROUP

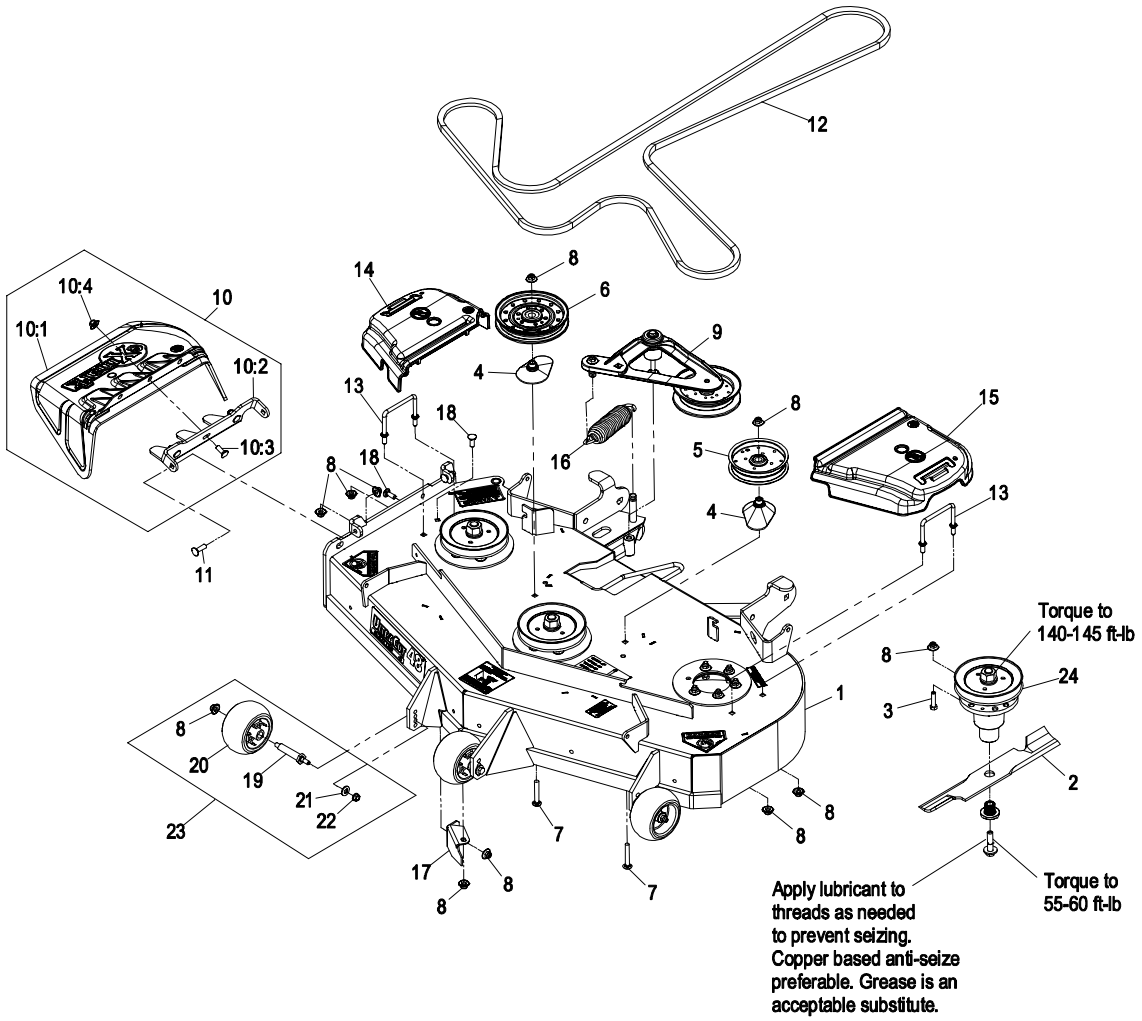

Item	Part No.	Description	Qty.
1	109-9027	Asm, Deck W/Decals 484	1
2	103-6401	Blade, Notched	3
●	103-6391	Blade, Mulching	3
	103-6386	Blade, Low Lift	3
	103-6381	Blade, Solid	3
	103-6396	Blade, Extreme	3
3	323-8	Screw, HH 3/8-16 x 1 1/2	18
4	109-2872	Spacer, Pulley	2
5	1-613098	Pulley, Idler	5
6	1-633109	Idler, Flat	6
7	3231-44	Bolt, Carriage 3/8-16 x 2 1/2	2
8	109-6658	Nut, Nyloc 3/8-16 Flg	31
9	109-2883	Asm, Deck Idler	1
10	109-7188	Asm, Discharge Chute	1
10:1	109-2738	Chute, Discharge	1
10:2	109-8675-01	Bracket, Discharge Chute	1
10:3	3231-22	Bolt, Carriage 3/8-16 x 1	3

Item	Part No.	Description	Qty.
10:4	109-6658	Nut, Nyloc 3/8-16 Flg	3
11	3231-28	Bolt, Carriage 3/8-16 x 1 1/4	2
12	109-8070	Belt, V-B X 175.75	1
13	109-6982	Wireform, Cover	2
14	109-6935	Cover, Belt RH 46-56	1
15	109-6936	Cover, Belt LH 46-56	1
16	116-0133	Extension-Spring	1
17	109-9010-01	Baffle, Discharge	1
18	3231-22	Bolt, Carriage 3/8-16 x 1	2
19	99-2842	Axle, Anti-Scalp Roller	3
20	1-603299	Roller, Scalp, Anti	3
21	98-5975	Washer, Spring Disc 3/8	3
22	3290-357	Nut, Whizlock 3/8-16	3
23	103-4051	Kit, Antiscalp Roller	3
24	109-9017	Kit, Cutter Housing 48	3
25	109-9642	Asm, Deck Complete 484	1

Exmark red touch up paint (spray paint – P/N 1-850337 - .6 oz liquid bottle – P/N 103-9140).

● Requires installation of Micro-Mulch accessory for proper mulching. Mulch kit P/N MK484.

48” DECK W/DECALS ASSEMBLY – 109-9027

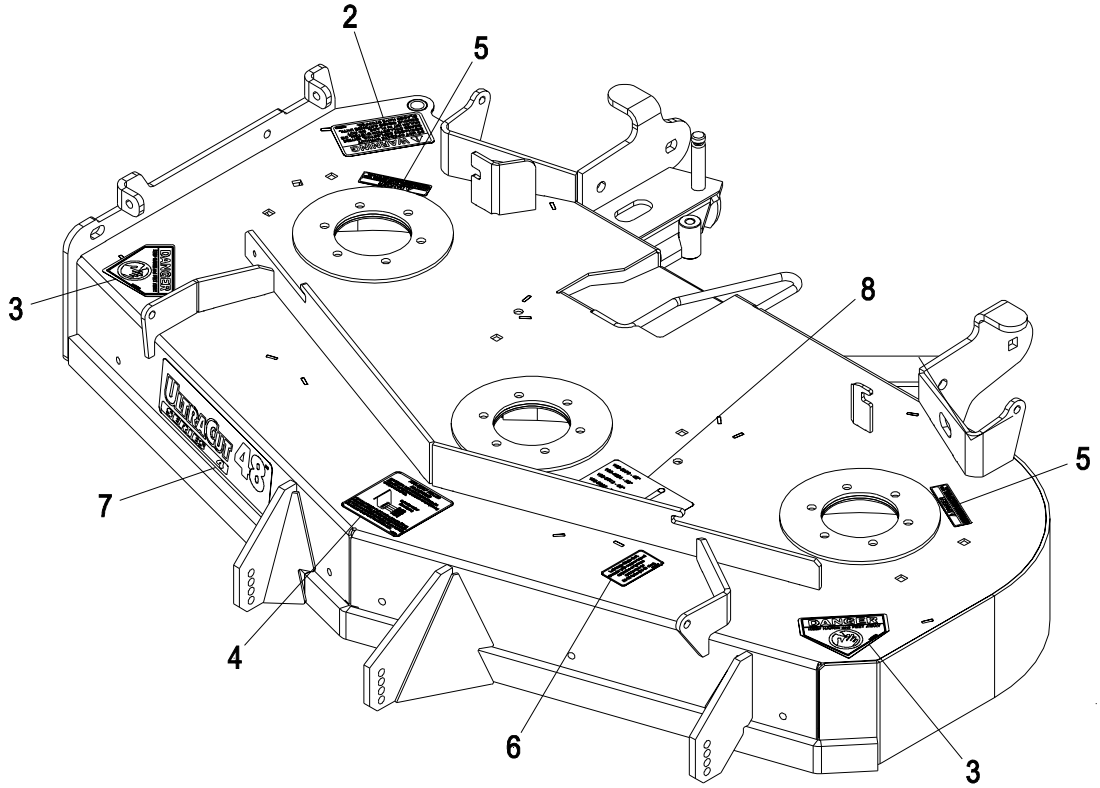

Item	Part No.	Description	Qty.
2	1-303508	Decal, Warning, Discharge	1
3	1-403005	Decal, Danger	2
4	1-633922	Decal, Antiscalp	1
5	98-5954	Decal, Cover, Missing	2

Item	Part No.	Description	Qty.
6	109-3148	Decal, Bolt Torque	1
7	116-0033	Decal, Ultracut 48 Series 4	1
8	109-9361	Decal, Belt Routing	1

CUTTER HOUSING ASSEMBLY – 109-9017

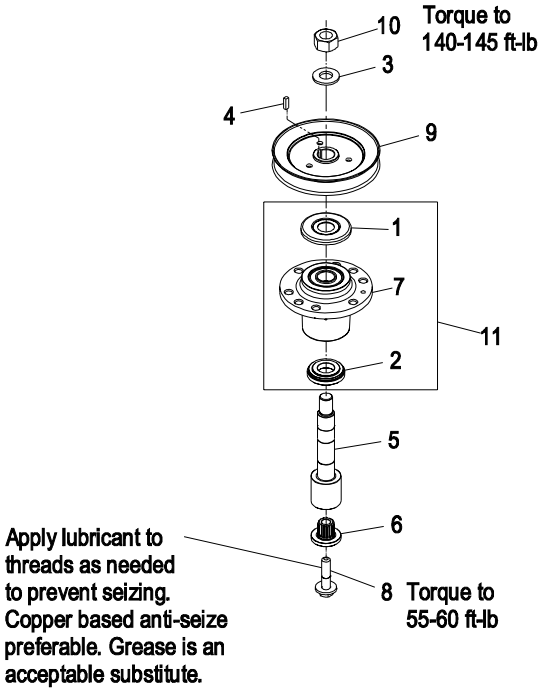

Item	Part No.	Description	Qty.
1	103-1330	Guard, Bearing Top	1
2	103-2535	Spacer, Guard Bottom	1
3	103-2802	Washer, Spring Disc 3/4	1
4	103-2982	Key, Machine 1/4 x 3/16 x 3/4	1
5✚■	103-9086	Kit, Splined Spindle	1
6	103-3037	Bushing, Splined	1

Item	Part No.	Description	Qty.
7	103-8353	Housing, Cutter	1
8	109-9220	Screw, SEMS 1/2-20 x 2.19	1
9	116-1444	Sheave, Blade Drive	1
10	3217-46	Nut, Hex 3/4-16 Heavy	1
11	103-8280	Kit, Cutter Housing	1

✚ Apply Mobil HTS grease (P/N 103-5217 1.5 oz packet) (or a food grade antiseize) between the jackshaft and bearings, jackshaft and sheaves, spindles and bearings, spindles and sheaves, and under top bearing guard. DO NOT use a copper or nickel based antiseize.

■ Kit includes items 3, 4, 5, 6, 8, & 10.

52” DECK GROUP

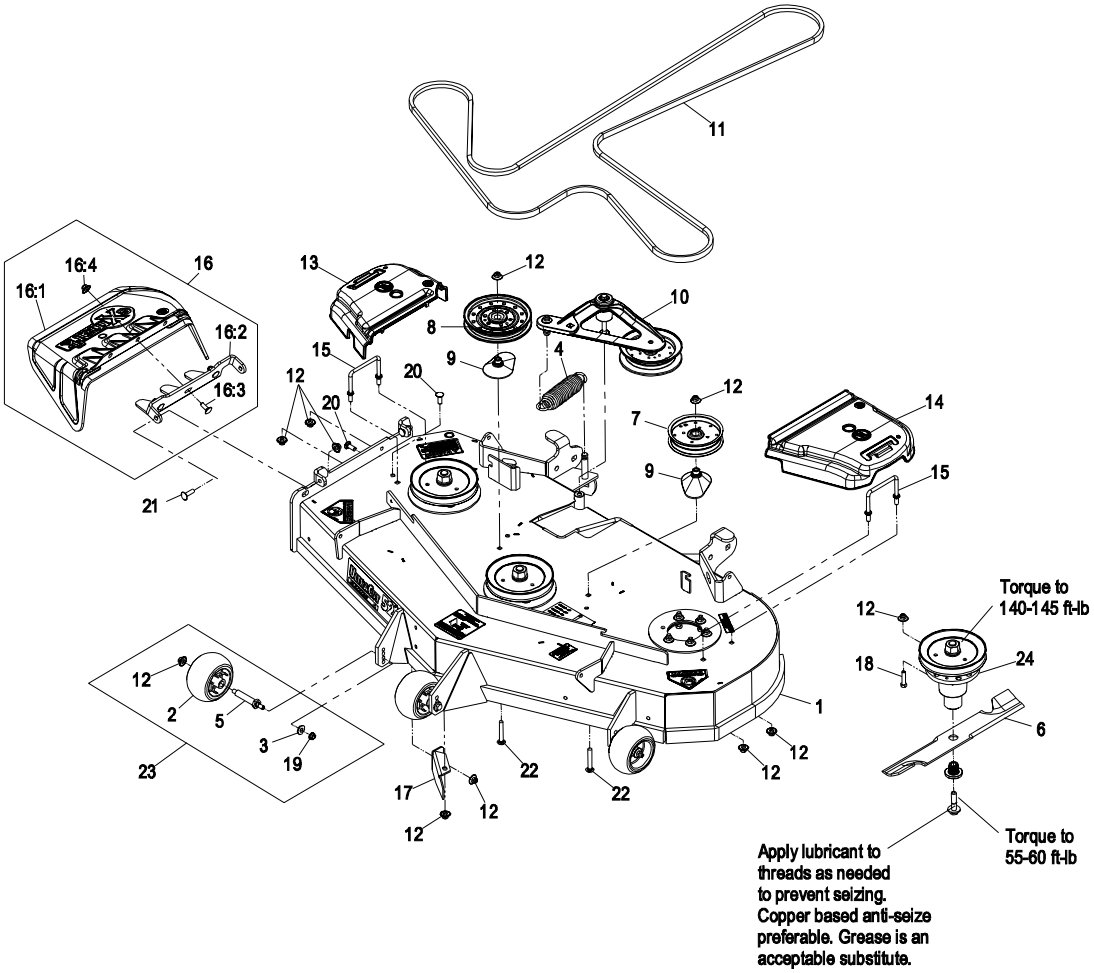

Item	Part No.	Description	Qty.
1	109-9012	Asm, Deck W/ Decals 524	1
2	1-603299	Roller, Scalp, Anti	3
3	98-5975	Washer, Spring Disc 3/8	3
4	116-0133	Extension, Spring	1
5	99-2842	Axle, Anti-Scalp Roller	3
6	103-6402	Blade-Notched	3
●	103-6392	Blade, Mulching	3
	103-6387	Blade, Low Lift	3
	103-6382	Blade, Solid	3
	103-6397	Blade, Extreme	3
7	1-613098	Pulley, Idler 5"	1
8	1-633109	Pulley, Idler 6”	1
9	109-2872	Spacer-Pulley	2
10	109-2883	Asm, Deck Idler	1
11	109-4994	Belt, V-B	1
12	109-6658	Nut, Nyloc 3/8-16 Flg	31
13	109-6935	Cover, Belt RH 46-56	1

Item	Part No.	Description	Qty.
14	109-6936	Cover, Belt LH 46-56	1
15	109-6982	Wireform, Cover	2
16	109-7188	Asm, Discharge Chute	1
16:1	109-2738	Chute, Discharge	1
16:2	109-8675-01	Bracket, Discharge Chute	1
16:3	3231-22	Bolt, Carriage 3/8-16 x 1	3
16:4	109-6658	Nut, Nyloc 3/8-16 Flg	3
17	109-9915-01	Baffle, Discharge 52/60	1
18	323-8	Screw, HH 3/8-16 x 1 1/2	18
19	3290-357	Nut, Whizlock 3/8-16	3
20	3231-22	Bolt, Carriage 3/8-16 x 1	2
21	3231-28	Bolt, Carriage 3/8-16 x 1 1/4	2
22	3231-44	Bolt, Carriage 3/8-16 x 2 1/2	2
23	103-4051	Kit, Antiscalp Roller	3
24	109-9018	Kit, Cutter Housing 52	3
25	109-9644	Asm, Deck Complete 524	1

Exmark red touch up paint (spray paint – P/N 1-850337 - .6 oz liquid bottle – P/N 103-9140).

● Requires installation of Micro-Mulch accessory for proper mulching. Mulch kit P/N MK524.

52” DECK W/DECALS ASSEMBLY – 109-9012

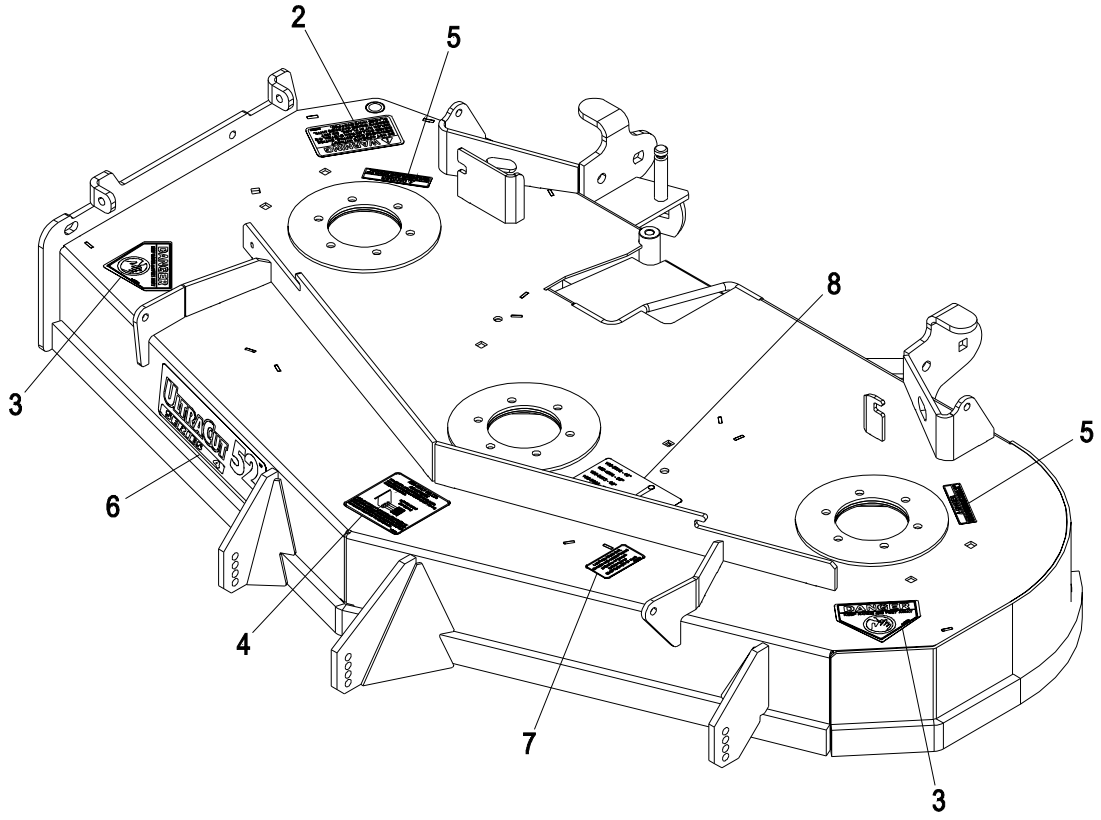

Item	Part No.	Description	Qty.
2	1-303508	Decal, Warning Discharge	1
3	1-403005	Decal, Danger	2
4	1-633922	Decal, Antiscalp	1
5	98-5954	Decal, Cover Missing	2

Item	Part No.	Description	Qty.
6	116-0034	Decal, Ultracut 52 Series 4	1
7	109-3148	Decal, Bolt Torque	1
8	109-9361	Decal, Belt Routing	1

CUTTER HOUSING ASSEMBLY – 109-9018

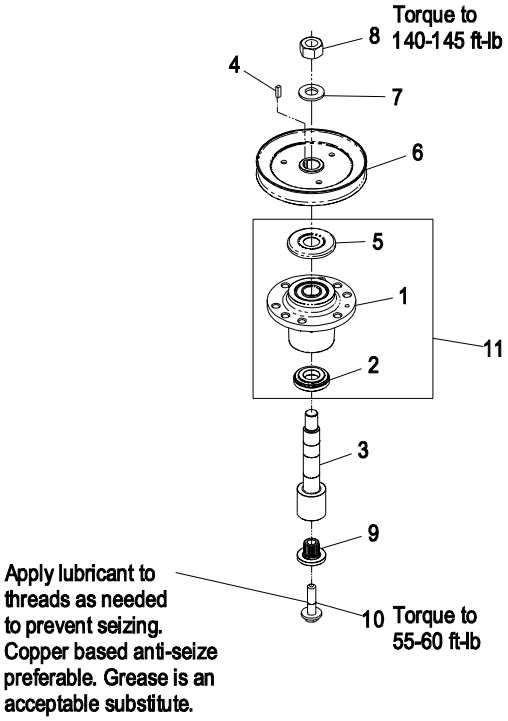

Item	Part No.	Description	Qty.
1	103-8353	Housing, Cutter	1
2	103-2535	Spacer, Guard Bottom	1
3✚■	103-9086	Kit, Splined Spindle	1
4	103-2982	Key, Machine 1/4 x 3/16 x 3/4	1
5	103-1330	Guard, Bearing Top	1
6	116-0186	Sheave, Blade Drive	1

Item	Part No.	Description	Qty.
7	103-2802	Washer, Spring Disc 3/4	1
8	3217-46	Nut, Hex 3/4-16 Heavy	1
9	103-3037	Bushing, Splined	1
10	109-9220	Screw, SEMS 1/2-20 x 2.19	1
11	103-8280	Kit, Cutter Housing	1

✚ Apply Mobil HTS grease (P/N 103-5217 1.5 oz packet) (or a food grade antiseize) between the jackshaft and bearings, jackshaft and sheaves, spindles and bearings, spindles and sheaves, and under top bearing guard. DO NOT use a copper or nickel based antiseize.

■ Kit includes items 3, 4, 5, 6, 8, & 10.

60” DECK GROUP

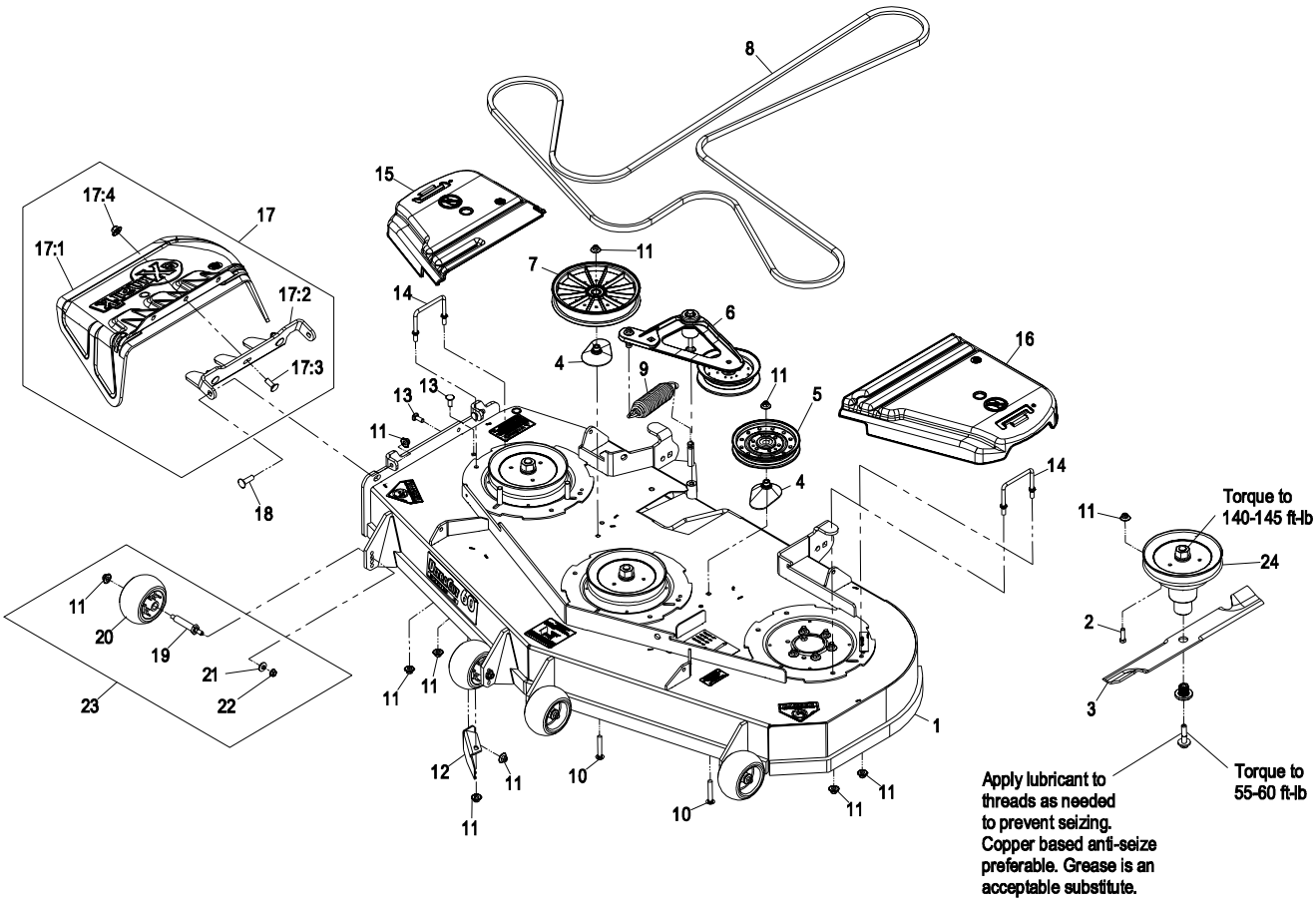

Item	Part No.	Description	Qty.
1	109-9013	Asm, Deck W/ Decals 604	1
2	323-7	Screw, HH 3/8-16 x 1 1/4	18
3	103-6403	Blade, Notched	3
●	103-6393	Blade, Mulching	3
	103-6388	Blade, Low Lift	3
	103-6383	Blade, Solid	3
	103-6398	Blade, Extreme	3
4	109-2872	Spacer-Pulley	2
5	1-633109	Pulley, Idler 6"	1
6	109-2883	Asm, Deck Idler	1
7	109-0996	Pulley, Idler 8"Flat	1
8	109-8073	Belt, V-5V	1
9	116-0133	Extension-Spring	1
10	3231-44	Bolt, Carriage 3/8-16 x 2 1/2	2
11	109-6658	Nut, Nyloc 3/8-16 Flg	37
12	109-9915-01	Baffle, Discharge 52/60	1
13	3231-22	Bolt, Carriage 3/8-16 x 1	2

Item	Part No.	Description	Qty.
14	109-6982	Wireform-Cover	2
15	116-0094	Cover-Belt, RH	1
16	109-6938	Cover-Belt, LH	1
17	109-7188	Asm, Discharge Chute	1
17:1	109-2738	Chute, Discharge	1
17:2	109-8675-01	Bracket, Discharge Chute	1
17:3	3231-22	Bolt, Carriage 3/8-16 x 1	3
17:4	109-6658	Nut, Nyloc 3/8-16 Flg	3
18	3231-28	Bolt, Carriage 3/8-16 x 1 1/4	2
19	99-2842	Axle, Anti-Scalp Roller	4
20	1-603299	Roller-Scalp, Anti	4
21	98-5975	Washer, Spring Disc 3/8	4
22	3290-357	Nut, Whizlock 3/8-16	4
23	103-4051	Kit, Antiscalp Roller	3
24	109-9019	Kit, Cutter Housing 60	3
25	109-9646	Asm, Deck Complete 604	1

Exmark red touch up paint (spray paint – P/N 1-850337 - .6 oz liquid bottle – P/N 103-9140).

● Requires installation of Micro-Mulch accessory for proper mulching. Mulch kit P/N MK604.

.

60” DECK W/DECALS ASSEMBLY – 109-9013

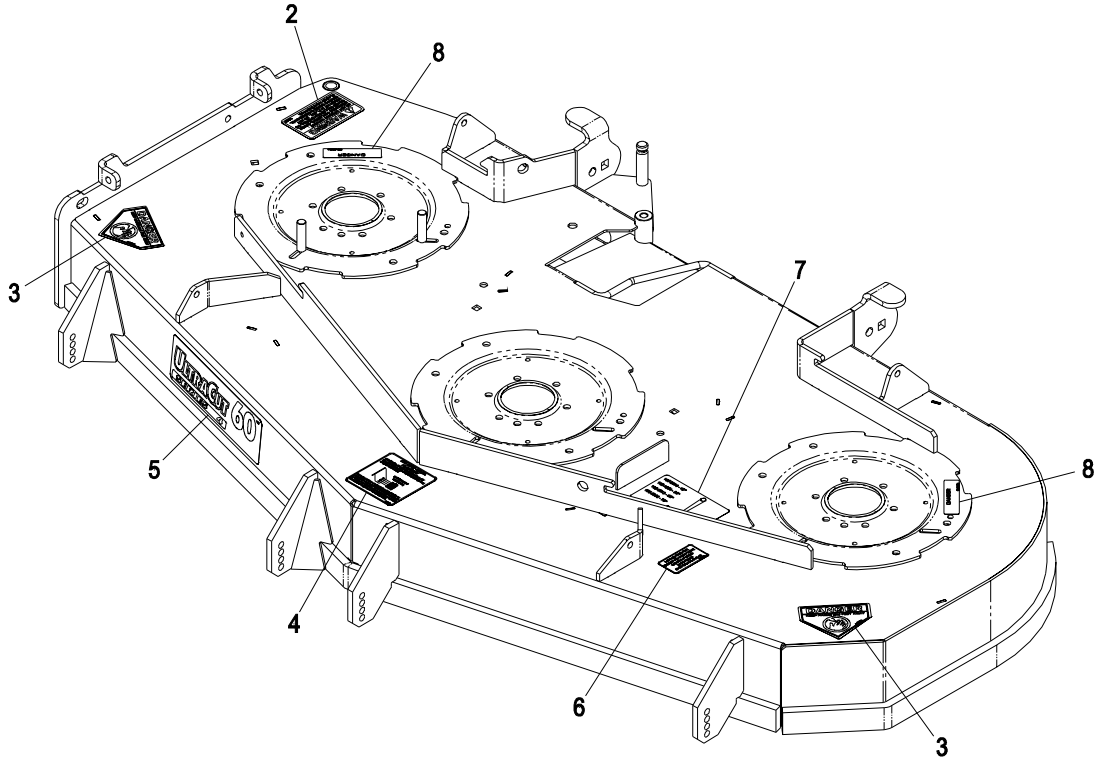

Item	Part No.	Description	Qty.
2	1-303508	Decal, Warning, Discharge	1
3	1-403005	Decal, Danger	2
4	1-633922	Decal, Antiscalp	1
5	116-0025	Decal, Ultracut 60 Series 4	1

Item	Part No.	Description	Qty.
6	109-3148	Decal, Bolt Torque	1
7	109-9361	Decal, Belt Routing	1
8	98-5954	Decal-Cover, Missing	2

CUTTER HOUSING ASSEMBLY – 109-9019

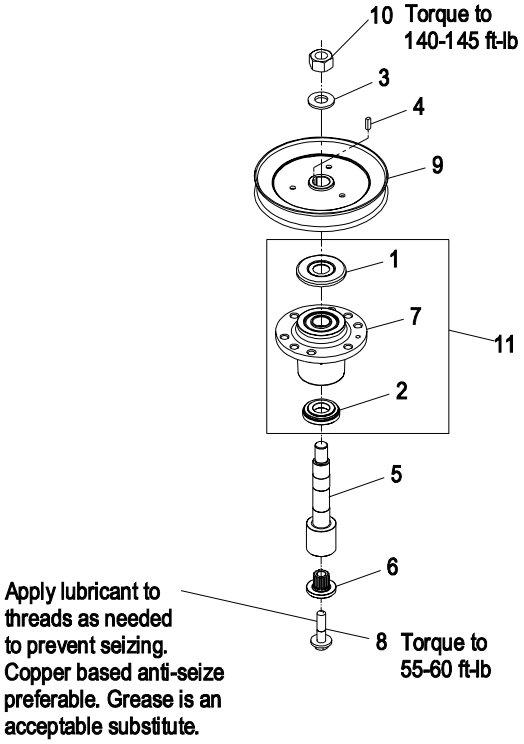

Item	Part No.	Description	Qty.
1	103-1330	Guard, Bearing Top	1
2	103-2535	Spacer, Guard Bottom	1
3	103-2802	Washer, Spring Disc 3/4	1
4	103-2982	Key, Machine 1/4 x 3/16 x 3/4	1
5✚■	103-9086	Kit, Splined Spindle	1

Item	Part No.	Description	Qty.
6	103-3037	Bushing, Splined	1
7	103-8353	Housing-Cutter	1
8	109-9220	Screw, SEMS 1/2-20 x 2.19	1
9	109-8251	Sheave, Blade Drive 7.25	1
10	3217-46	Nut, Hex 3/4-16 Heavy	1

✚ Apply Mobil HTS grease (P/N 103-5217 1.5 oz packet) (or a food grade antiseize) between the jackshaft and bearings, jackshaft and sheaves, spindles and bearings, spindles and sheaves, and under top bearing guard. DO NOT use a copper or nickel based antiseize.

■ Kit includes items 3, 4, 5, 6, 8, & 10.

72” DECK GROUP

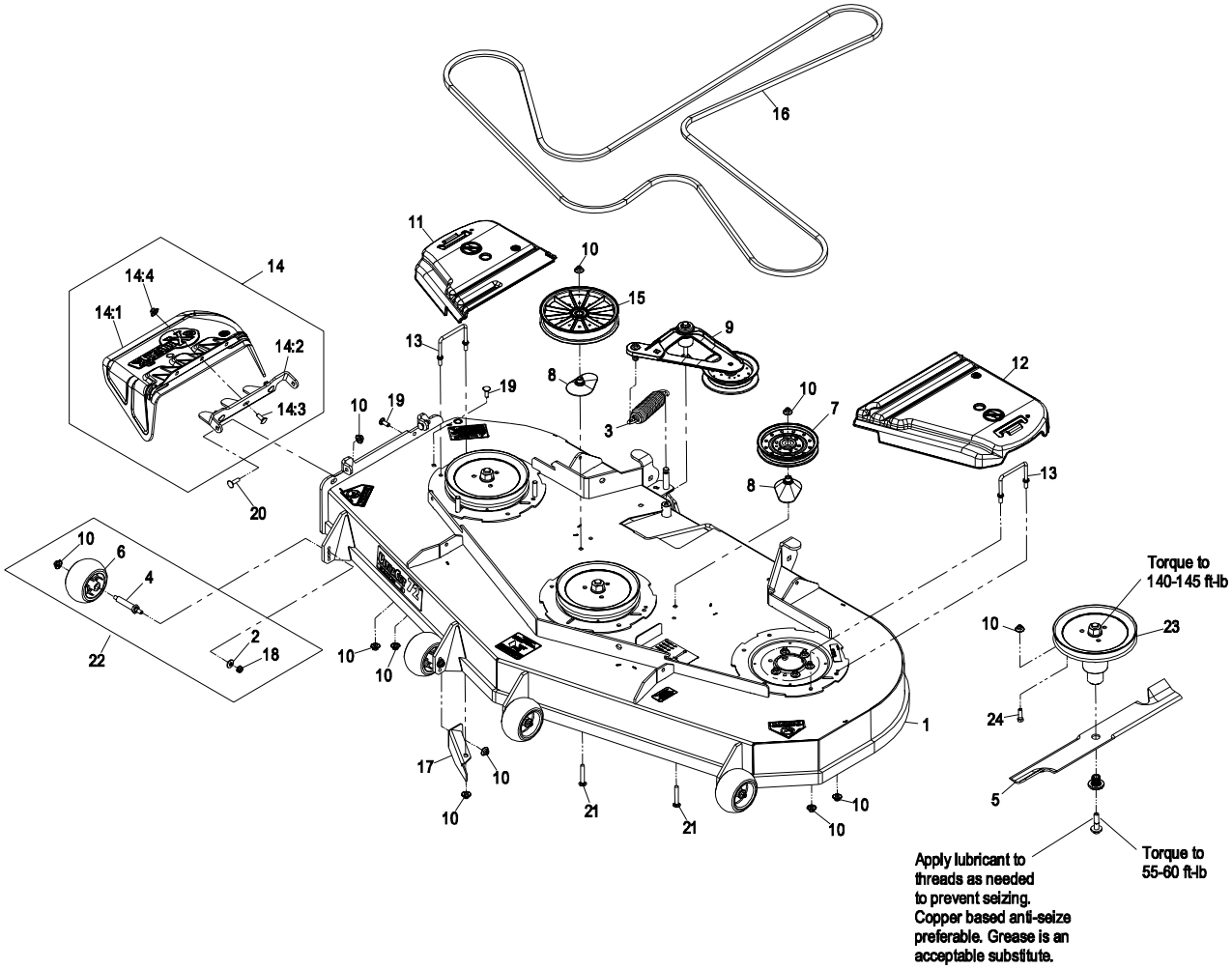

Item	Part No.	Description	Qty.
1	109-9014	Asm, Deck W/Decals 724	1
2	98-5975	Washer, Spring Disc 3/8	1
3	116-0133	Extension-Spring	1
4	99-2842	Axle, Anti-Scalp Roller	4
5	103-6404	Blade, Notched	3
●	103-6394	Blade, Mulching	3
	103-6389	Blade, Low Lift	3
	103-6384	Blade, Solid	3
	103-6399	Blade, Extreme	3
6	1-603299	Roller-Scalp, Anti	4
7	1-633109	Pulley, Idler 6"	1
8	109-2872	Spacer, Pulley	2
9	109-2883	Asm, Deck Idler	1
10	109-6658	Nut, Nyloc 3/8-16 Flg	37
11	116-0094	Cover-Belt, RH	1
12	109-6938	Cover-Belt, LH	1
13	109-6982	Wireform, Cover	2

Item	Part No.	Description	Qty.
14	109-7188	Asm, Discharge Chute	1
14:1	109-2738	Chute, Discharge	1
14:2	109-8675-01	Bracket, Discharge Chute	1
14:3	3231-22	Bolt, Carriage 3/8-16 x 1	3
14:4	109-6658	Nut, Nyloc 3/8-16 Flg	3
15	109-0996	Pulley, Idler 8"Flat	1
16	109-9023	Belt, V-5V	1
17	109-9695-01	Baffle, Discharge 724	1
18	3290-357	Nut, Whizlock 3/8-16	4
19	3231-22	Bolt, Carriage 3/8-16 x 1	2
20	3231-28	Bolt, Carriage 3/8-16 x 1 1/4	2
21	3231-44	Bolt, Carriage 3/8-16 x 2 1/2	2
22	103-4051	Kit, Antiscalp Roller	4
23	116-0911	Kit, Cutter Housing 72	1
24	323-7	Screw, HH 3/8-16 x 1 1/4	18
25	109-9648	Asm, Deck Complete	1

Exmark red touch up paint (spray paint – P/N 1-850337 - .6 oz liquid bottle – P/N 103-9140).

● Requires installation of Micro-Mulch accessory for proper mulching. Mulch kit P/N MK724

.

72” DECK W/DECALS ASSEMBLY – 109-9014

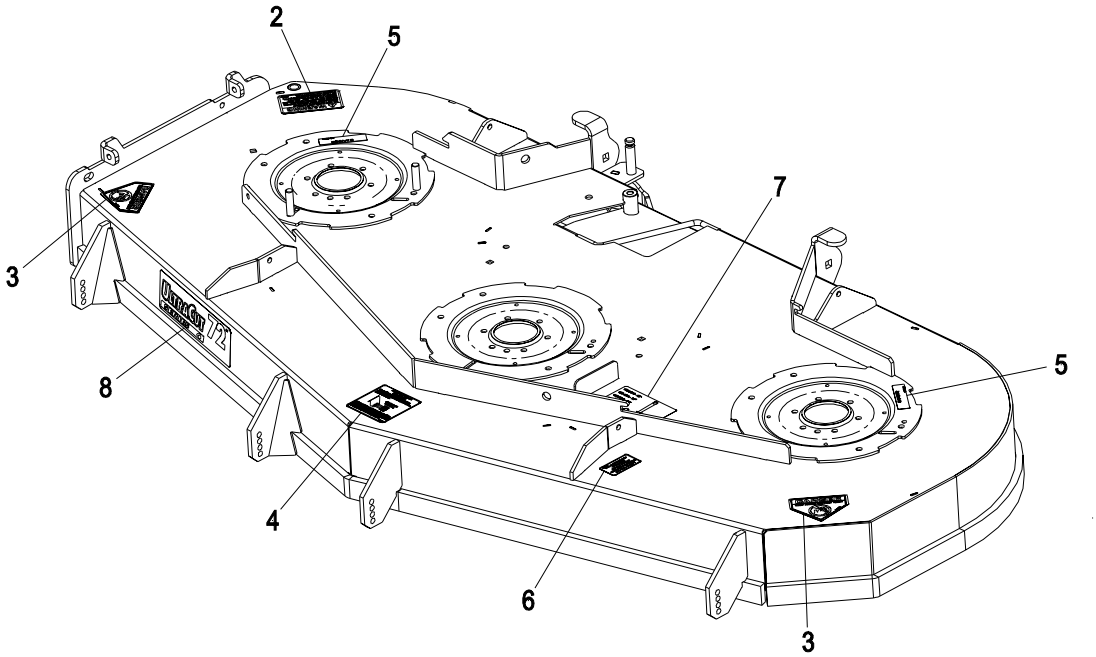

Item	Part No.	Description	Qty.
2	1-303508	Decal-Warning, Discharge	1
3	1-403005	Decal-Danger	2
4	1-633922	Decal, Antiscalp	1
5	98-5954	Decal-Cover, Missing	2

Item	Part No.	Description	Qty.
6	109-3148	Decal, Bolt Torque	1
7	109-9361	Decal, Belt Routing	1
8	116-0944	Decal, Ultracut 72 Series 4	1

CUTTER HOUSING ASSEMBLY – 116-0911

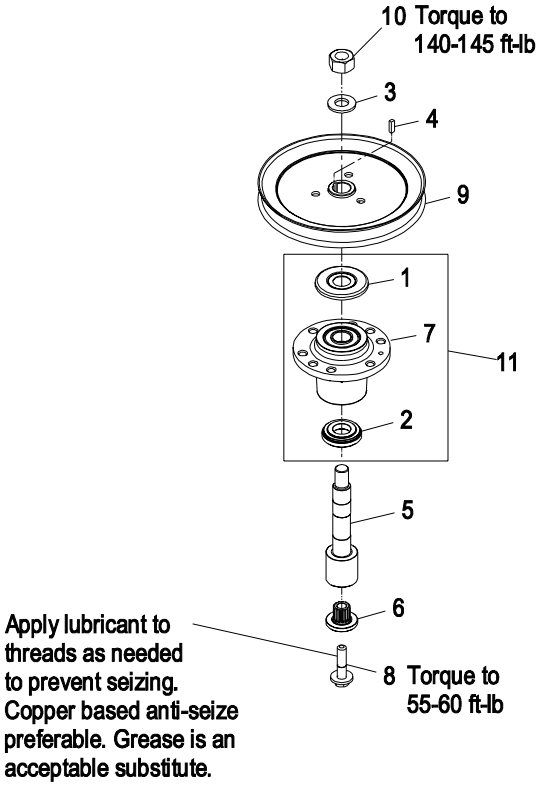

Item	Part No.	Description	Qty.
1	103-1330	Guard, Bearing Top	1
2	103-2535	Spacer, Guard Bottom	1
3	103-2802	Washer, Spring Disc 3/4	1
4	103-2982	Key, Machine 1/4 x 3/16 x 3/4	1
5✚■	103-9086	Kit, Splined Spindle	1
6	103-3037	Bushing, Splined	1

Item	Part No.	Description	Qty.
7	103-8353	Housing-Cutter	1
8	109-9220	Screw, SEMS 1/2-20 x 2.19	1
9	116-0912	Sheave, Blade Drive 8.74	1
10	3217-46	Nut, Hex 3/4-16 Heavy	1
11	103-8280	Kit, Cutter Housing	1

✚ Apply Mobil HTS grease (P/N 103-5217 1.5 oz packet) (or a food grade antiseize) between the jackshaft and bearings, jackshaft and sheaves, spindles and bearings, spindles and sheaves, and under top bearing guard. DO NOT use a copper or nickel based antiseize.

■ Kit includes items 3, 4, 5, 6, 8, & 10.

DECK IDLER ASSEMBLY – 109-2883

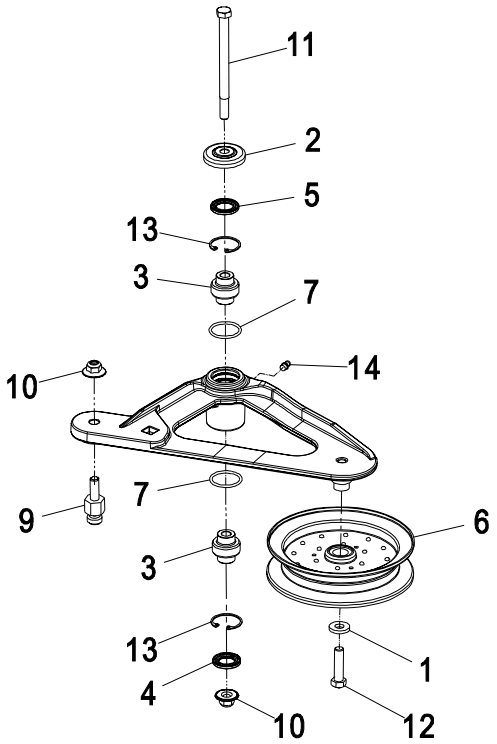

Item	Part No.	Description	Qty.
1	43-0940	Spacer-Hub, Blower	1
2	103-2916	Guard, Top	1
3	103-3504	Bearing, Spherical	2
4	103-3505	Seal, Double Lip	1
5	103-3506	Seal, Single Lip	1
6	103-8743	Pulley, Idler 5"Flanged	1
7	106-7159	O-Ring	2

Item	Part No.	Description	Qty.
9	109-7399	Pin, Spring Anchor	1
10	109-6658	Nut, Nyloc 3/8-16 Flg	2
11	109-7409	Screw, Shoulder 3/8-16 x 5	1
12	323-8	Screw, HH 3/8-16 x 1 1/2	1
13	32120-10	Ring, Retaining	2
14	302-19	Zerk, 1/4-28 Str	1

MAINFRAME GROUP

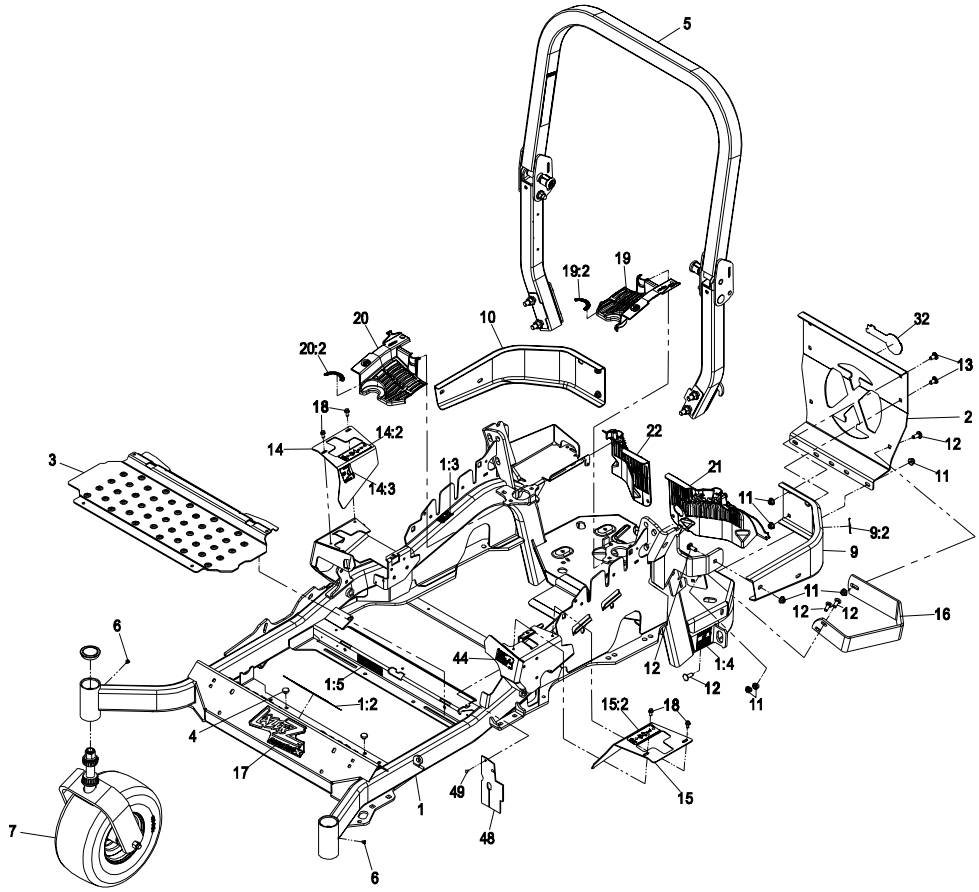

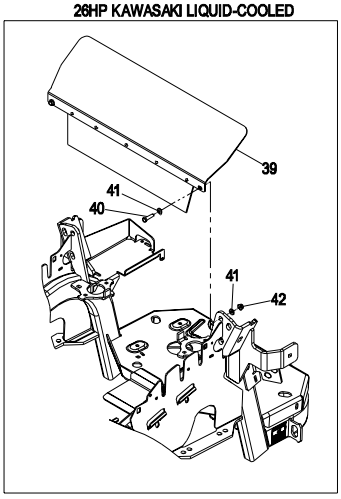

Item	Part No.	Description	Qty.
1	116-2124	Frame, Main 48/52 W/Decals	1
	116-2126	Frame, Main 60 W/Decals	1
	116-2128	Frame, Main 72 W/Decals	1
1:2	107-2112	Decal, Warning	1
1:3	103-2076	Decal, Caution Hot Surface	2
1:4	116-0205	Decal, Belt Drive	2
1:5	117-2718	Decal, Spark Arrester	1
2	109-8863-03	Plate, Rear Guard	1
3	116-0024-01	Floorpan	1
4	1-513658	Bumper	2
5	116-0230	Asm, ROPS Service	1
6	1-811010	Plug	2
7▲		Asm, Caster Wheel (48”, 52”, & 60”)	2
		Asm, Caster Wheel (72” & LZAS26LKA604)	2
9	116-0180	Bumper, Rear LH W/Decal	1
9:2	103-2076	Decal, Caution Hot Surface	1
10	116-0057-03	Bumper, Rear RH	1
11	104-8301	Nut, Nyloc 3/8-16 Flg	11
12	3231-22	Bolt, Carriage 3/8-16 x 1	7
13	3231-21	Bolt, Carriage 3/8-16 x 3/4	4
14	116-0579	Asm, Motion Control Cover W/Decal RH	1
14:2	109-7232	Decal, Motion Control	1

Item	Part No.	Description	Qty.
14:3	109-7929	Decal, Park Brake	1
15	116-0580	Asm, Motion Control Cover W/Decal LH	1
15:2	109-7232	Decal, Motion Control	1
16	116-0043-03	Guard, Muffler	1
17	116-2350	Decal, Lazer AS Model	1
18	32144-10	Screw, HWH 1/4-20 x .62	4
19	116-0170	Asm, Guard, Hydro W/Decal	1
19:2	116-0157	Decal, Hydro Oil	1
20	116-0171	Asm, Guard, Hydro W/Decal	1
20:2	116-0157	Decal, Hydro Oil	1
21	109-9057	Guard, Hydro Rear LH	1
22	109-9058	Guard, Hydro Rear RH	1
	116-0669	Guard, Hydro Rear RH Trimmed Rear RH Trimmed (LZAS26LKA604)	1
32	103-2883	Decal, Exmark Logo	1
39	116-1397	Asm, Air Deflector	1
40	322-6	Screw, HH 5/16-18 x 1 1/4	2
41	1-303334	Washer, Spring Disc 5/16	4
42	104-8300	Nut, Nyloc 5/16-18 Flg	2
44	116-1654	Decal, Fuel Fill	1
48	116-2362	Deflector, Air Flow	1
49	1-803035	Rivet 3/16 x 1/4	2

Exmark red touch up paint (spray paint – P/N 1-850337 - .6 oz liquid bottle – P/N 103-9140).
Exmark black touch up spray paint – gloss black.

▲ See pages 18 & 19

ROPS ASSEMBLY – 116-0230

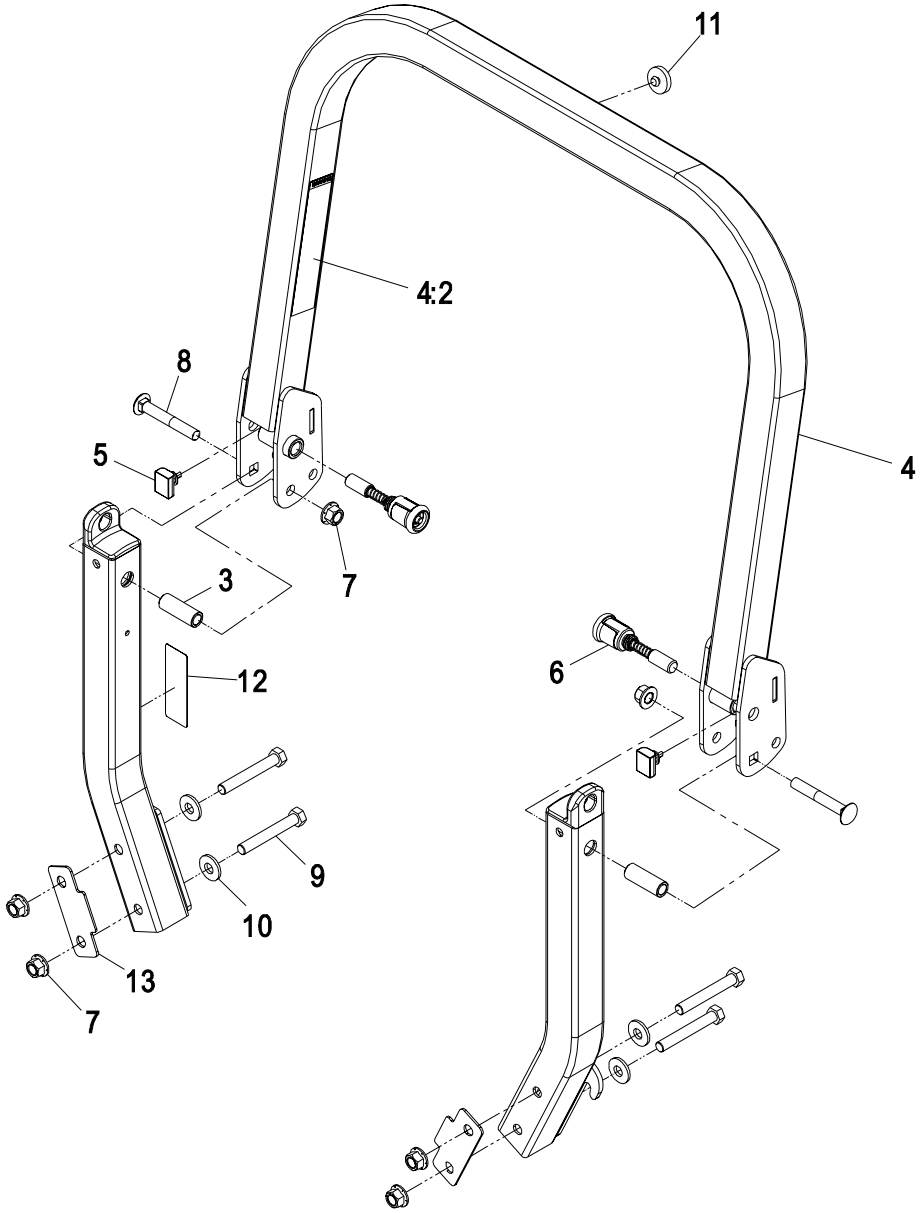

Item	Part No.	Description	Qty.
3	109-6653	Spacer	2
4	116-0019	Asm, Rops Upper W/Decal	1
4:2	107-2102	Decal, Warning, Folding Rops	1
5	109-5337	Bumper, Rops	2
6	116-0104	Asm, Spring Pin	2
7	99-5107	Nut, Lock 1/2-13	6

Item	Part No.	Description	Qty.
8	3233-10	Bolt, Carriage 1/2-13 x 3 1/2	2
9	325-17	Screw, HH 1/2-13 x 4	4
10	109-9505	Washer, Spring Disc 1/2	4
11	109-9233	Bumper, Rubber Push-In	1
12	116-0090	Decal, Caution Fuel Vent	1
13	116-0960	Spacer	2

CASTER WHEEL ASSEMBLY – 48”, 52”, & 60” (EXCEPT LZAS26LKA604)

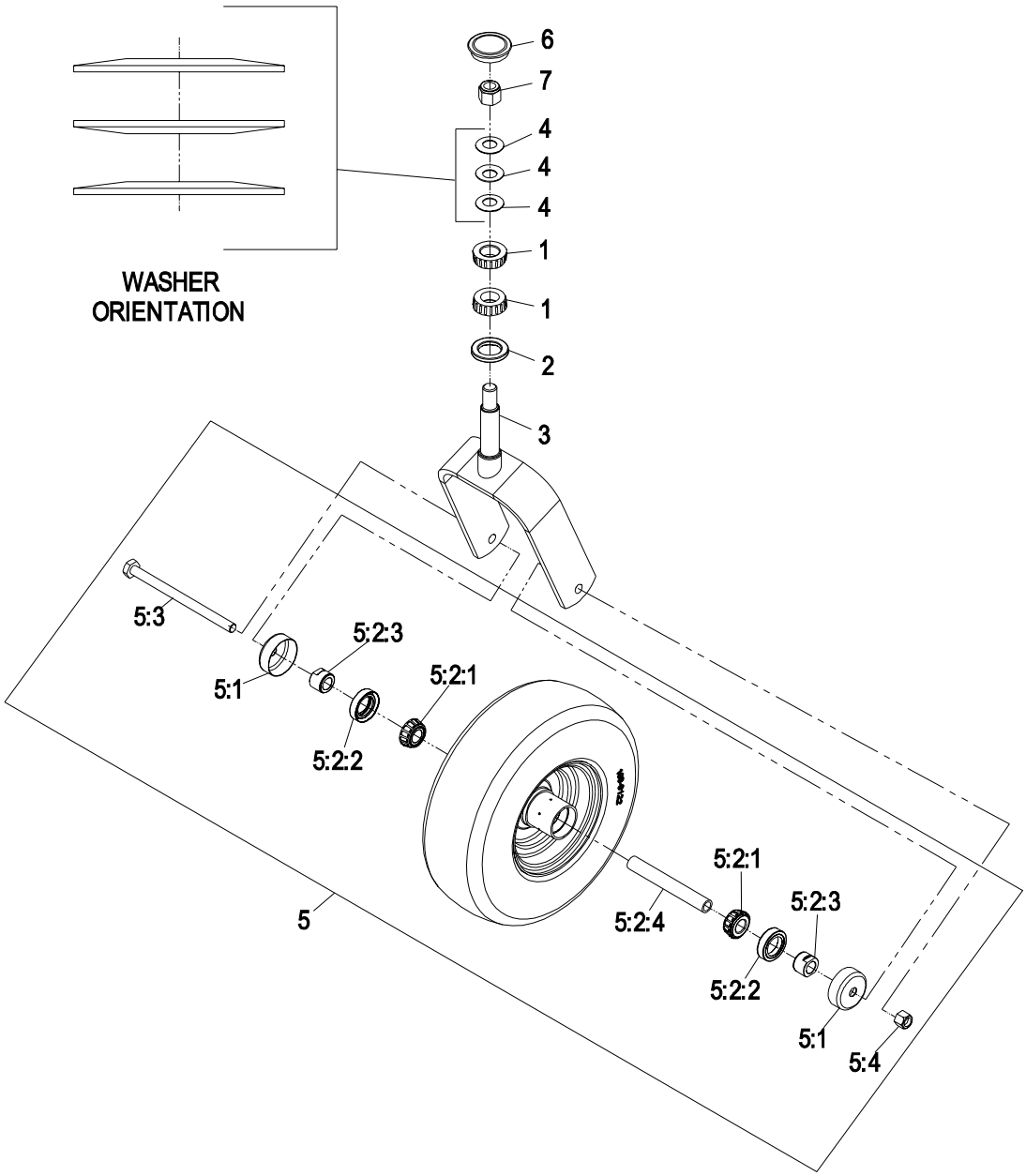

Item	Part No.	Description	Qty.
1	1-543509	Cone, Bearing Tapered Roller	2
2	1-543511	Seal, Grease	1
3	116-1092-01	Wld, Caster Fork	1
4	1-633508	Washer, Spring Disc	3
5	116-2082	Asm, Wheel And Tire W/Axle (pneumatic)	1
5:1	103-2768	Guard, Seal	2
5:2:1	1-633585	Bearing, Cone Tapered Roller	2

Item	Part No.	Description	Qty.
5:2:2	103-0063	Seal, Double Lip	2
5:2:3▲	103-3051	Spacer, Nut	2
5:2:4	103-3155	Axle, Caster	1
5:3	325-42	Screw, HH 1/2-13 x 8	1
5:4	3296-23	Nut, Nyloc 1/2-13	1
6	103-4882	Cap-Grease	1
7	3296-51	Nut, Nyloc 3/4-10	1

Exmark red touch up paint (spray paint – P/N 1-850337 - .6 oz liquid bottle – P/N 103-9140).

▲ Use Pro-Lock, Nut Type (P/N 1-840022, .5ml tube) on spacer nut, item 5:2:3.

.

CASTER WHEEL ASSEMBLY – 72” & LZAS26LKA604

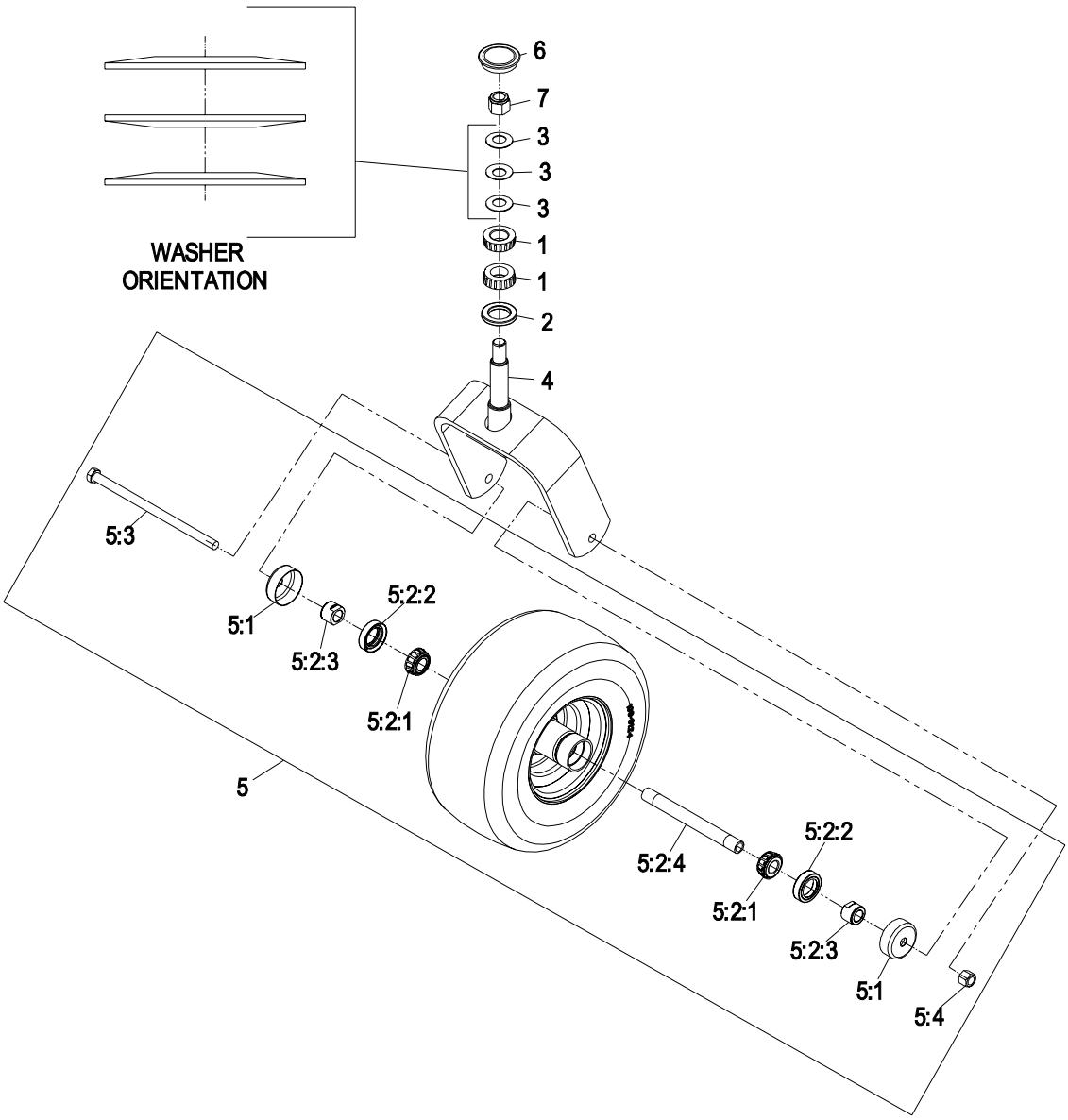

Item	Part No.	Description	Qty.
1	1-543509	Cone, Bearing Tapered Roller	2
2	1-543511	Seal, Grease	1
3	1-633508	Washer, Spring Disc	3
4	103-1474-01	Fork-Caster	1
5	116-2080	Asm, Wheel And Tire W/Axle (pneumatic)	1
5:1	103-2768	Guard, Seal	2
5:2:1	1-633585	Bearing, Cone Tapered Roller	2

Item	Part No.	Description	Qty.
5:2:2	103-0063	Seal, Double Lip	2
5:2:3▲	103-3051	Spacer, Nut	2
5:2:4	103-5156	Axle, Caster	1
5:3	325-39	Screw, HH 1/2-13 x 9 1/2	1
5:4	3296-23	Nut, Nyloc 1/2-13	1
6	103-4882	Cap-Grease	1
7	3296-51	Nut, Nyloc 3/4-10	1

Exmark red touch up paint (spray paint – P/N 1-850337 - .6 oz liquid bottle – P/N 103-9140).

▲ Use Pro-Lock, Nut Type (P/N 1-840022, .5ml tube) on spacer nut, item 5:2:3.

DECK SUPPORT GROUP

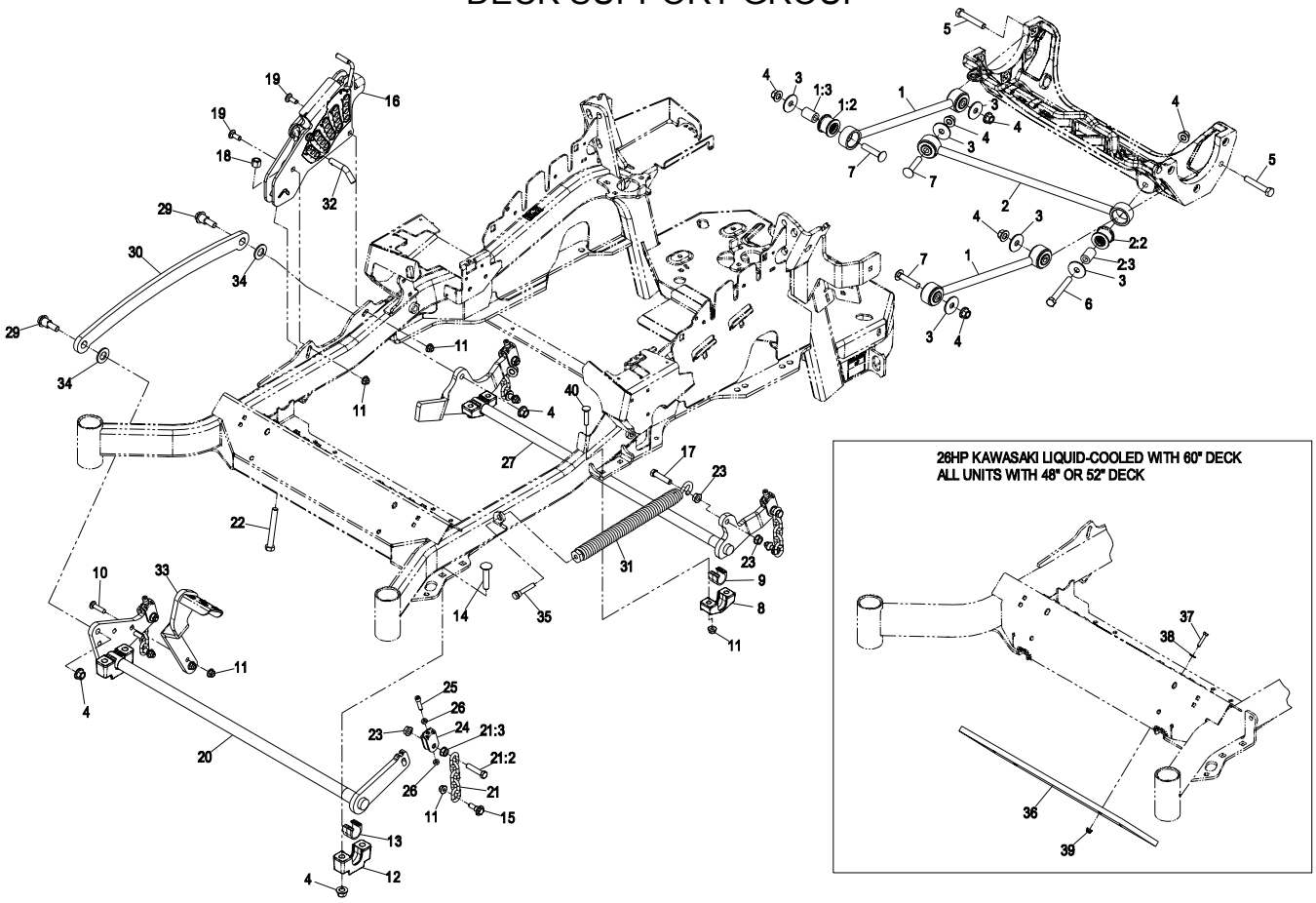

Item	Part No.	Description	Qty.
1	109-7952	Asm, Deck Strut (48”, 52”, & 72”)	2
	116-2031	Asm, Long Deck Strut (60”)	2
1:2	109-5009	Bushing-Suspension, Rubber	2
1:3	109-5010	Spacer	2
2	109-5013	Panhard Rod Asm	1
2:2	109-5009	Bushing-Suspension, Rubber	2
2:3	109-5010	Spacer	2
3	86-1990	Washer	6
4	99-5107	Nut, Lock 1/2-13	12
5	325-12	Screw, HH 1/2-13 x 3	2
6	325-17	Screw, HH 1/2-13 x 4	1
7	3233-34	Bolt, Carriage 1/2-13 x 2 1/2	3
8	116-0818-03	Support-Bearing, Cross Shaft Rear	2
9	109-7173	Bearing-Cross, Rear Shaft	2
10	3231-4	Bolt, Carriage 3/8-16 x 1 1/2	2
11	104-8301	Nut, Nyloc 3/8-16 Flg	12
12	109-9409	Support-Cross Shaft, Bearing Front	2
13	109-9410	Bearing-Shaft Front, Cross	2
14	116-1700	Bolt, Carriage 1/2-13 x 2 1/2 spl neck	4
15	109-9840	Screw, Hex Flange 3/8-16 x .80	4
16	109-7438	Hoc Asm	1
17	109-9065	Screw, HH 7/16-14 x 2	1
18	3296-23	Nut, Nyloc 1/2-13	1
19	3231-2	Bolt, Carriage 3/8-16 x 1	2

Item	Part No.	Description	Qty.
20	116-2217-03	Wld, Cross Shaft Front	1
21		Deck Lift Chain Asm	4
21:2	109-9065	Screw, HH 7/16-14 x 2	1
21:3	32128-37	Nut, Whizlock 7/16-14	1
22	116-0559	Bolt, HH 1/2-13 x 4 tap	1
23	32128-37	Nut, Whizlock 7/16-14	6
24	109-9066	Yoke-Adjust, Deck	4
25	3274-18	Screw, SH 5/16-18 x 1 1/4	4
26	3218-2	Nut, Jam 5/16-18	8
27	116-0459-03	Lift-Deck, Rear	1
29	116-0780	Screw, Shoulder HHF 1/2-13 x 1.12	2
30	116-0797-03	Link-Lift, Deck	1
31	116-0000	Extension Spring Asm (60” & 72”)	1
	116-0886	Extension Spring Asm (48” & 52”)	1
32	109-8757	Pin-Hoc	1
33	116-1919-01	Wld, Foot Lever	1
34	3256-28	Washer, 3/4 SAE	2
35	92-7674	Bolt-Shoulder	1
36	116-0827-01	Weight, Toe Board	1
37	321-8	Screw, HH 1/4-20 x 1 1/4	4
38	3256-22	Washer, 1/4 SAE	4
39	104-7201	Nut, Nyloc 1/4-20 Flg	4
40	3231-5	Bolt, Carriage 3/8-16 x 1 3/4	4

Exmark red touch up paint (spray paint – P/N 1-850337 - .6 oz liquid bottle – P/N 103-9140)

HEIGHT OF CUT ASSEMBLY – 109-7438

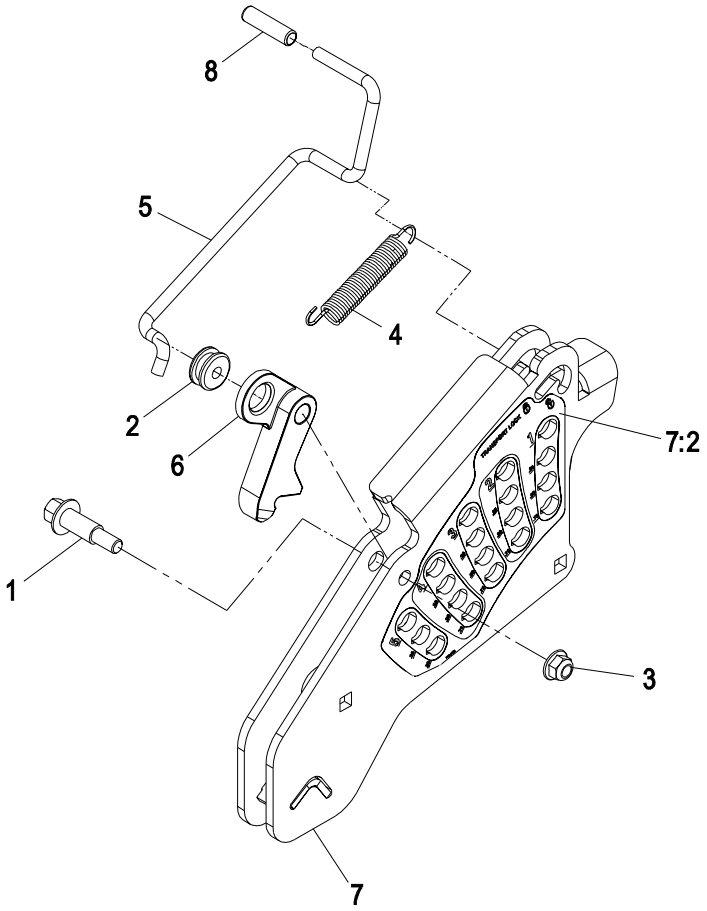

Item	Part No.	Description	Qty.
1	62-1330	Bolt-Shoulder	1
2	109-7130	Grommet	1
3	104-8301	Nut, Nyloc 3/8-16 Flg	1
4	109-7124	Spring, Extension	1
5	109-7128	Rod, Transport Lock	1

Item	Part No.	Description	Qty.
6	116-0118	Pawl, Transfer Lock	1
7	109-7335	Asm, Hoc Plate W/Decal	1
7:2	116-0752	Decal, Cut Of Height	1
8	109-8250	Grip, Lever	1

CONTROLS GROUP

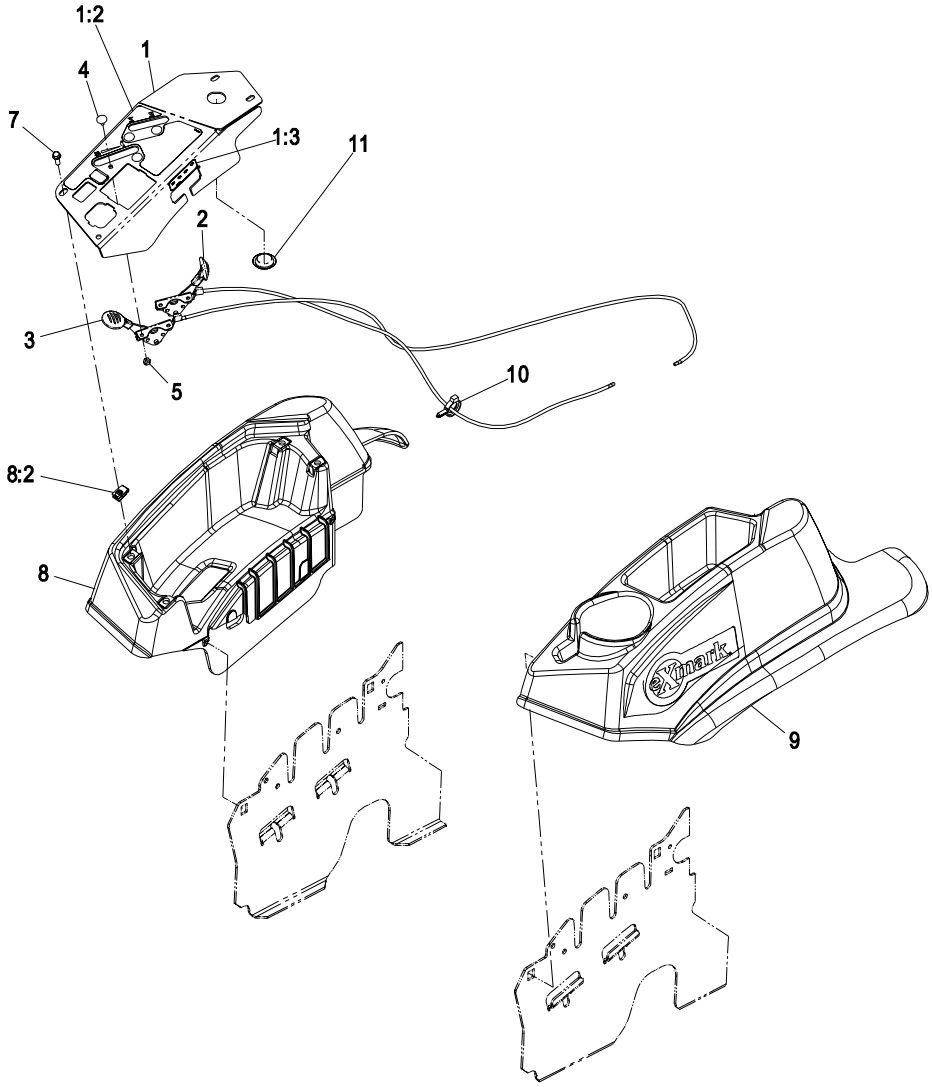

Item	Part No.	Description	Qty.
1	109-8484	Console, Panel W/Decal (All Kawasaki except 26HP)	1
	109-9454	Console, Panel W/Decal (26HP Kaw)	1
	116-1845	Console, Panel W/Decal (Kohler)	1
1:2	109-8483	Decal, Control Panel	1
1:3	109-7330	Decal, Fuse	1
2	109-8165	Asm, Choke Cable (Kohler)	1
	109-8167	Asm, Choke Cable (Kawasaki)	1
3	116-0969	Asm, Throttle Cable (Kohler & 26HP Kawasaki)	1

Item	Part No.	Description	Qty.
	116-1972	Asm, Throttle Cable (All Kawasaki except 26HP)	1
4	1-807513	Bolt, Carriage #10-24 x 1/2	4
5	3296-2	Nut, Nyloc #10-24	4
7	32105-15	Screw, Machine 1/4-20 x 3/4	4
8	116-1278	Console, RH Narrow Asm	1
8:2	107069	Clip	4
9	109-9457	Console.LH Narrow Asm	1
10	105-1853	Clamp, Hose	1
11	116-1875	Plug, Plastic	1

MOTION CONTROL GROUP

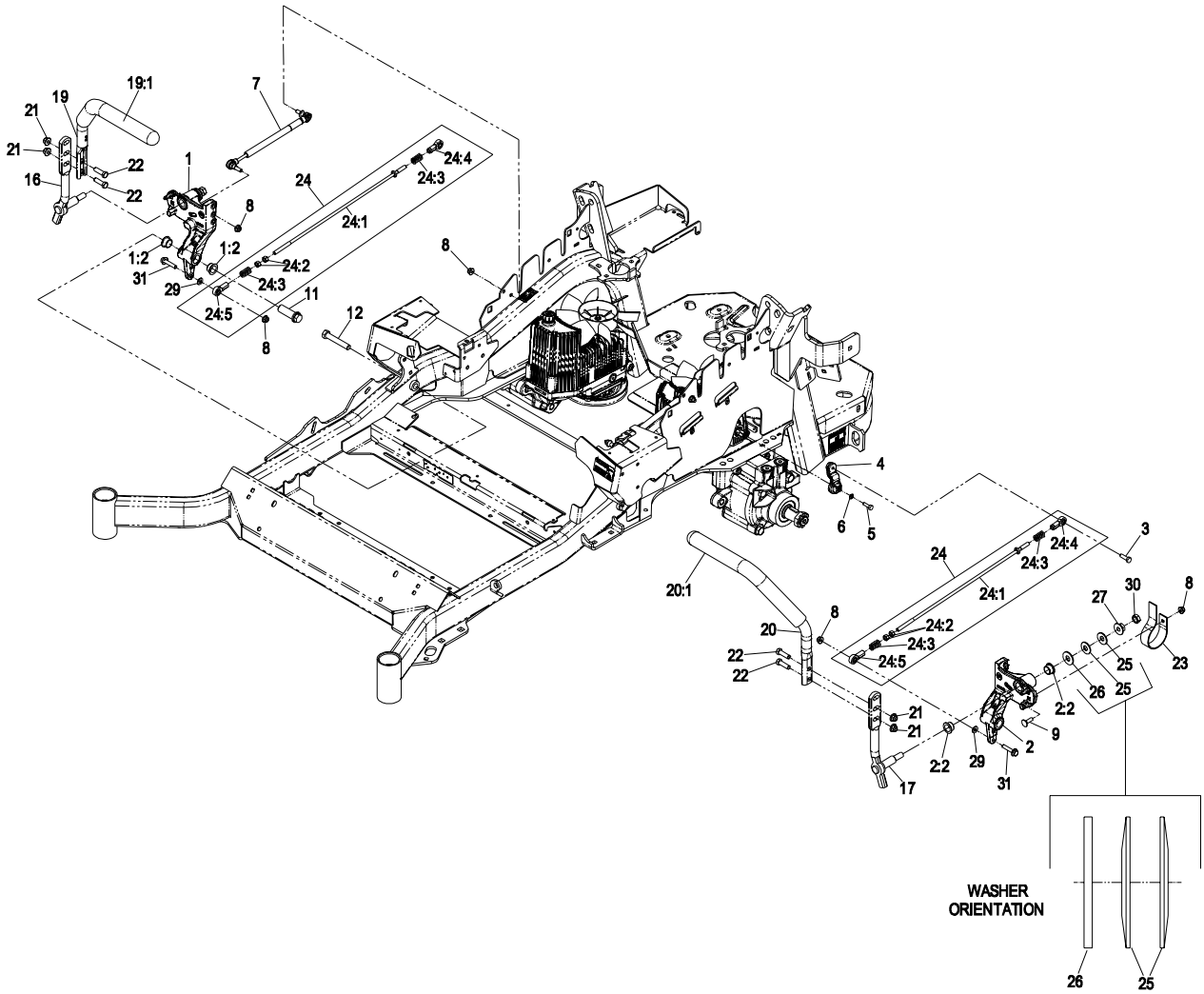

Item	Part No.	Description	Qty.
1	116-0880	Asm, Mot Ctrl/Bushing RH	1
1:2	109-8054	Bushing, Flanged	4
2	116-0881	Asm, Mot Ctrl/Bushing LH	1
2:2	109-8054	Bushing, Flanged	4
3▲	116-0648	Screw, HH 5/16-18 x 1 W/Patch	2
4	109-4581	Arm, Pump Control	2
5▲	9080046	Screw, HH 1/4-20 x 7/8	2
6	1-303435	Washer, Spring Disc 1/4	2
7	116-0027	Damper, Motion Control	2
8	104-8300	Nut, Nyloc 5/16-18 Flg	8
9	3230-2	Bolt, Carriage 5/16-18 x 1	2
11	109-5891	Hub, Threaded	2
12	325-12	Screw, HH 1/2-13 x 3	2
16	116-0039	Lever, Motion Control RH	1
17	116-0040	Lever, Motion Control LH	1
19	109-6589	Asm, Steering Handle RH	1
19:1	109-5668	Grip, Control Lever	1

Item	Part No.	Description	Qty.
20	109-6590	Asm, Steering Handle LH	1
20:1	109-5668	Grip, Control Lever	1
21	104-8301	Nut, Nyloc 3/8-16 Flg	4
22	323-7	Screw, HH 3/8-16 x 1 1/4	4
23	109-5575	Spring, Leaf Rtn	2
24	109-8106	Asm, Pump Linkage Front (60” & 72”)	2
	109-8107	Asm, Pump Linkage Rear (48” & 52)	2
24:2	3219-2	Nut, Hex 5/16-24	2
24:3	1-323245	Spring, Compression	2
24:4	1-633152	Balljoint	1
24:5	1-543017	Balljoint	1
25	109-9505	Washer, Spring Disc 1/2	4
26	3256-6	Washer	2
27	32128-56	Nut, Hex 1/2-13 Flange	2
29	3256-23	Washer	2
30	3218-5	Nut, Jam 1/2-13	2
31	115-1794	Screw, Hex Flange 5/16-18 x 1 1/2	2

▲ Use Pro-Lock, Nut Type (P/N 1-840022, .5ml tube).

PARK BRAKE GROUP

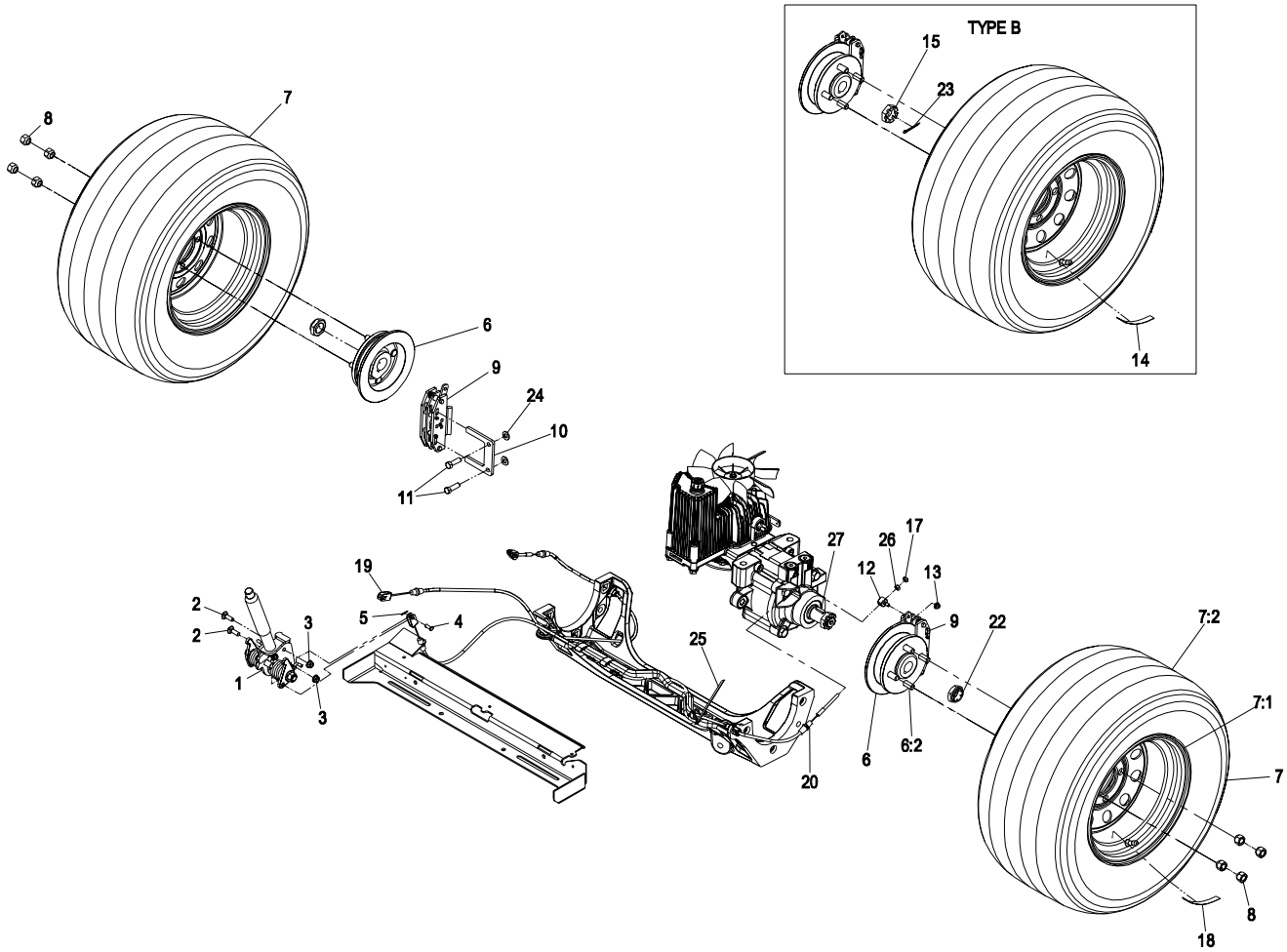

Item	Part No.	Description	Qty.
1	116-1878	Brake Handle Asm	1
2	3230-2	Bolt, Carriage 5/16-18 x 1	2
3	104-8300	Nut, Nyloc 5/16-18 Flg	2
4	60-1730	Pin-Clevis	2
5	3272-1	Pin, Cotter 1/16 x 1/2	2
6	116-1746	Wheel Hub And Stud Asm	2
6:2	1-633926	Stud-Wheel	4
7	115-3590	Asm, Wheel & Tire (48”)	2
	115-3589	Asm, Wheel & Tire (52”)	2
	115-3588	Asm, Wheel & Tire (60”)	2
	109-8972	Asm, Wheel & Tire (72”)	2
7:1	109-3645	Wheel (48”)	1
	109-2875	Wheel (52”)	1
	109-2871	Wheel (60”)	1
	109-3156	Wheel (72”)	1
7:2	1-653160	Tire (48” & 52”)	1
	1-633993	Tire (60” & 72”)	1
8	242-50	Nut, Lug 1/2-20	8

Item	Part No.	Description	Qty.
9	109-2889	Caliper-Brake	2
10	109-0958	Plate, Brake Mount	2
11	92-5727	Screw, HH 3/8-16 x 1 1/4 patch lock	4
12	112-8379	Swivel	2
13	104-7201	Nut, Nyloc 1/4-20 Flg	2
14	116-0165	Decal-Hub, Wheel	2
15	1-809036	Nut, Slotted 1-20	2
17	3296-13	Nut, Nyloc 1/4-28	2
18	116-2643	Decal, Hub, Wheel	2
19	115-3584	Cable	1
20	115-3585	Cable	1
22	1-809036	Nut, Slotted 1-20	2
23	1-806800	Pin, Cotter 9/64 x 1 1/2	2
24	3256-24	Washer, 3/8 SAE	4
25	116-0940	Tie-Cable	1
26	3219-1	Nut, Hex 1/4-28	2
27	3257-42	Key, Woodruff	2

BRAKE HANDLE ASSEMBLY – 116-1878

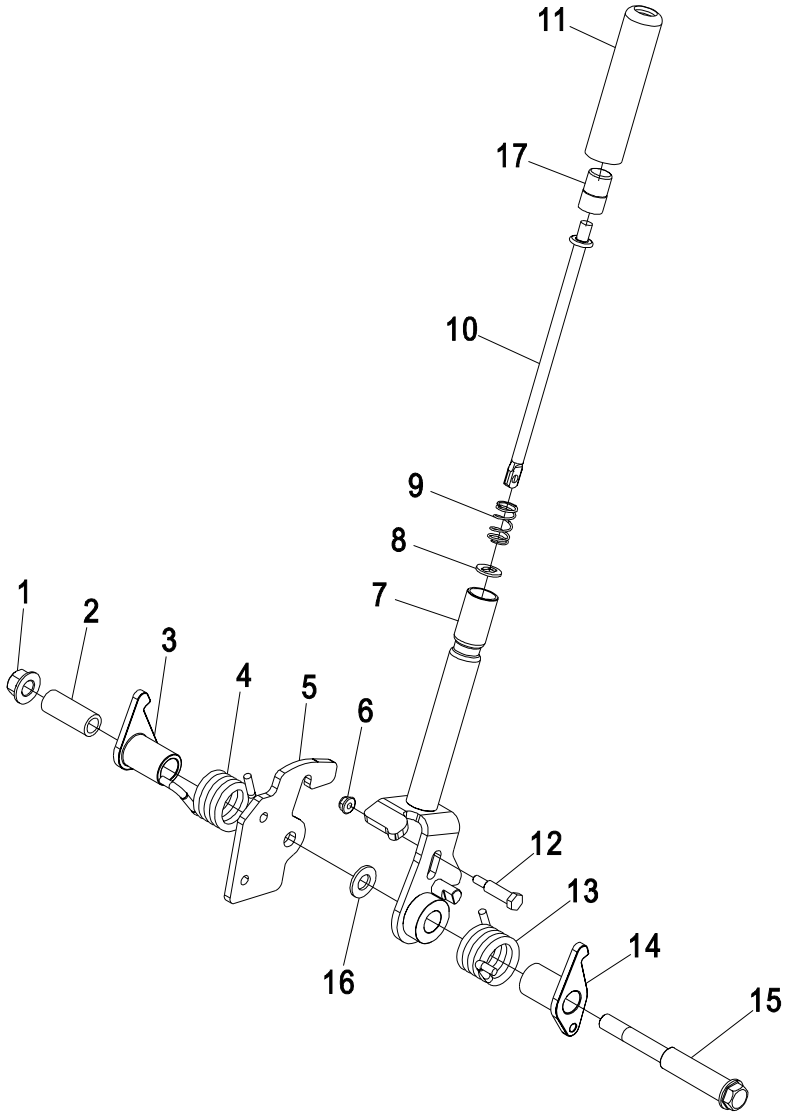

Item	Part No.	Description	Qty.
1	99-5107	Nut, Lock 1/2-13	1
2	117-0380	Spacer	1
3	115-3580	Arm-Brake, LH	1
4	117-0376	Spring-Torsion, RH	1
5	115-3574	Plate-Latch	1
6	104-7201	Nut, Nyloc 1/4-20 Flg	1
7	116-1876-03	Brake Handle Asm	1
8	114-1207	Washer-Special	1
9	114-8187	Spring-Compression	1

Item	Part No.	Description	Qty.
10	115-3581	Rod-Release, Brake	1
11	115-3592	Grip	1
12	112-8387	Bolt, HH Shoulder 1/4-20 x 1.64	1
13	117-0375	Spring-Torsion, LH	1
14	115-3579	Arm-Brake, RH	1
15	117-0379	Bolt, Shoulder 1/2-13 x 5.57	1
16	3256-26	Washer, 1/2 SAE	1
17	115-2750	Knob	1

Exmark black touch up spray paint – gloss black.

SEAT GROUP

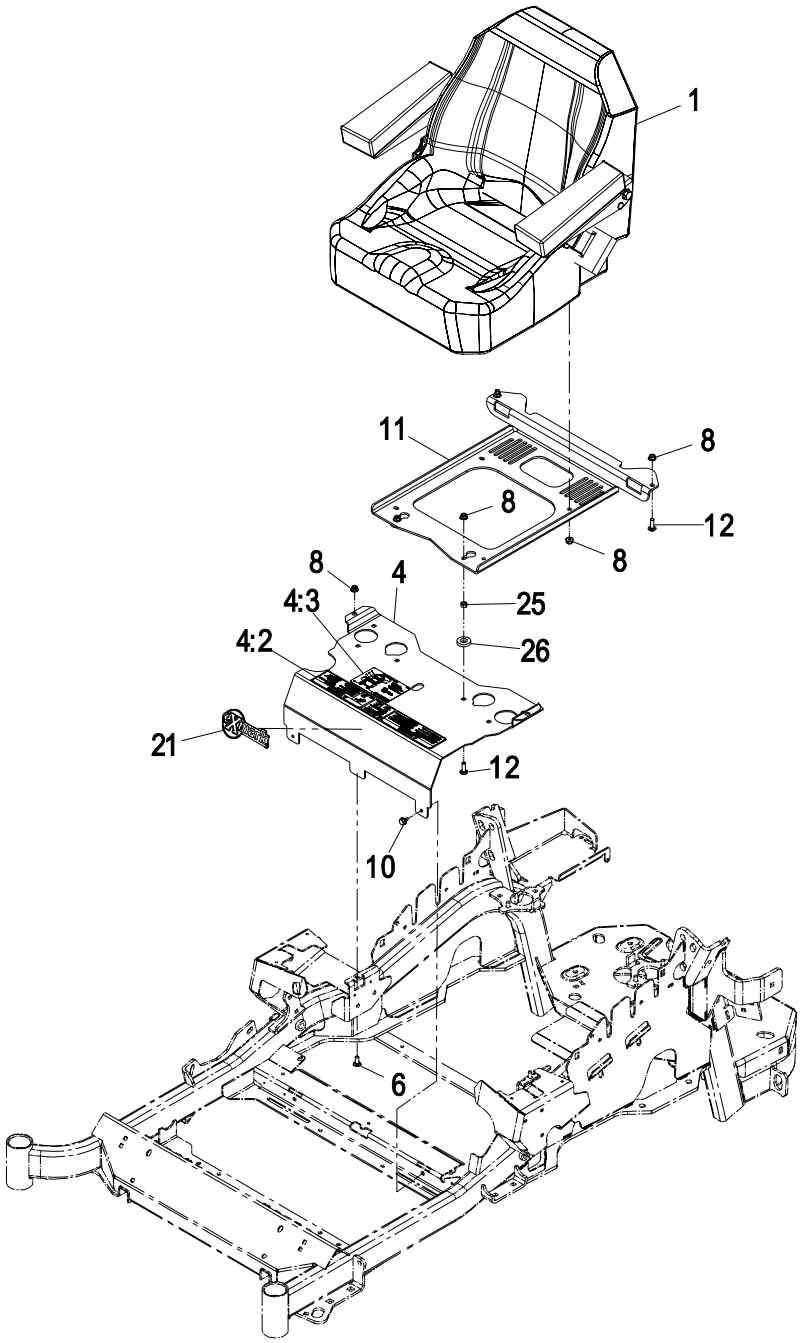

Item	Part No.	Description	Qty.
1	116-0037	Seat, Exmark	1
4	116-2323	Mount, Seat W/Decals	1
4:2	109-7069	Decal, Console	1
4:3	116-0211	Decal, Service Aid	1
6	3230-23	Bolt, Carriage 5/16-18 x 3/4, short neck	2
8	104-8300	Nut, Nyloc 5/16-18 Flg	10

Item	Part No.	Description	Qty.
10	9266934	Screw, HWH 5/16 x 1/2 TF	2
11	116-0192-03	Plate, Seat Support	1
12	3230-22	Bolt, Carriage 5/16-18 x 1 Sp	4
21	103-2883	Decal, Exmark Logo	1
25	3217-6	Nut, Hex 5/16-18	2
26	1-323539	Spacer, Blade Drive	2

Exmark black touch up spray paint – gloss black

SEAT W/TRACKS ASSEMBLY – 116-0037

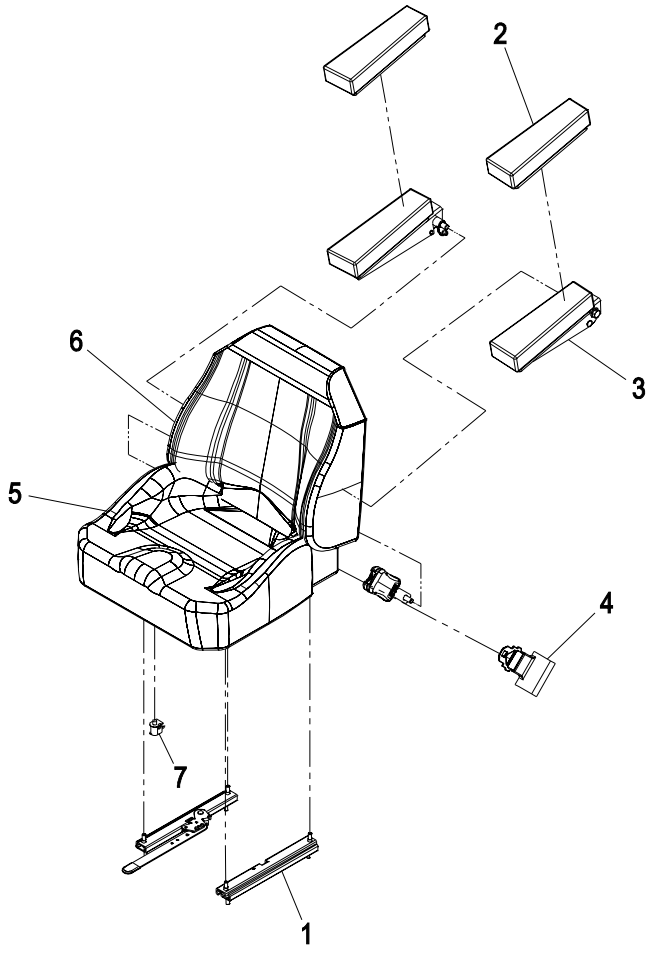

Item	Part No.	Description	Qty.
1	109-9801	Set, Seat Track	1
2	109-9813	Set, Arm Rest Pads	1
3	109-9804	Kit, Arm Rest Set	1
4	109-9805	Kit, Seat Belt W/Long Buckle	1

Item	Part No.	Description	Qty.
5	109-9818	Cover, Cushion	1
6	109-9809	Cover, Back	1
7	82-2190	Switch	1

FUEL TANK GROUP

NON-CALIFORNIA UNITS

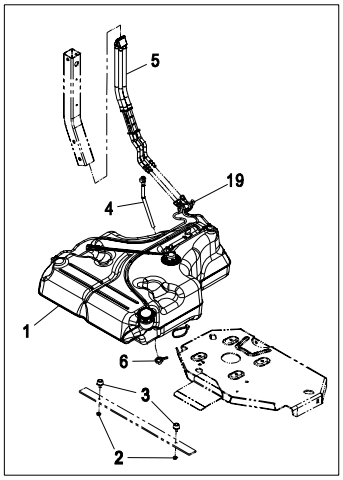

CALIFORNIA UNITS
WITH KOHLER ENGINES

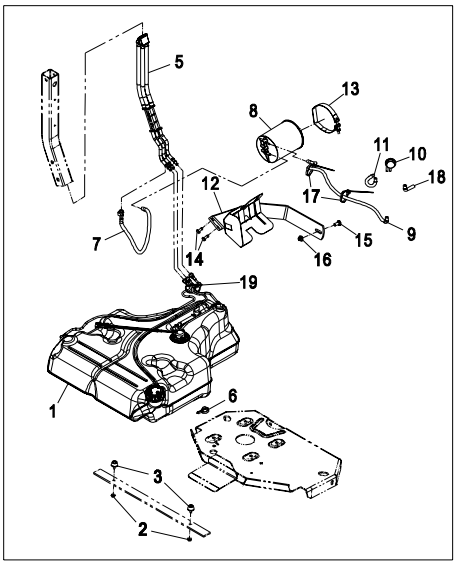

CALIFORNIA UNITS
WITH KAWASAKI ENGINES

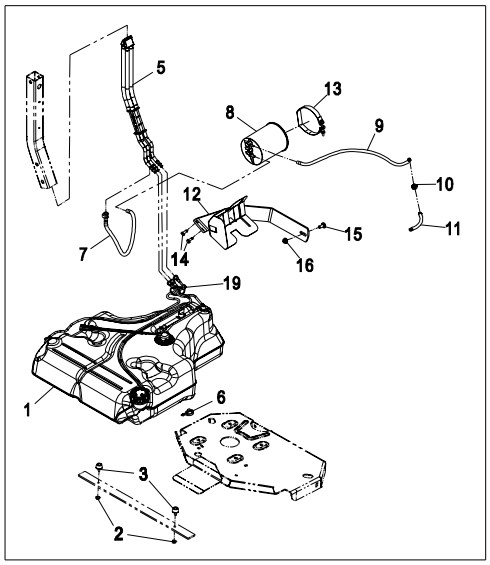

Item	Part No.	Description	Qty.
1●	109-9357	Fuel Tank Asm	1
✚	116-2131	Asm, Fuel Tank Low Perm	1
2	32128-33	Nut, Whizlock 1/4-20	2
3	109-2365	Bumper-Rubber (W/Stud)	2
4	109-9450	Tube-Vent, Fuel Drain	1
5	109-9491	Fuel Manifold Vent Asm	1
6	105-1853	Clamp-Hose	1
7	116-1702	Asm, Vent Hose	1
8	116-1442	Canister, Carbon 1200cc	1
9■	108-6344	Hose-Fuel	1
▼	116-2231	Hose, 3/16 Formed	1

Item	Part No.	Description	Qty.
10■	115-7868	Valve-Check, Vacuum	1
▼	116-2232	Valve, Vacuum Control	1
11■	116-2394	Hose, Fuel	1
▼	116-2619	Hose, Fuel	1
12	116-1433-03	Wld, Canister Mount	1
13	116-2228	Clamp, T-Bolt	1
14	32144-70	Screw, HWH 5/16-18 x 3/4 TF	2
15	3231-22	Bolt, Carriage 3/8-16 x 1	1
16	104-8301	Nut, Nyloc 3/8-16 Flg	1
17	1-303335	Tie, Cable 7 15/16	2
18	116-2233	Hose, 3/16 Formed	1
19	1-303335	Tie, Plastic	1

Exmark black touch up spray paint – gloss black

- ● Non-California Units
- ✚ California Units
- ■ California Units with Kohler Engines
- ▼ California Units with Kawasaki Engines

FUEL TANK ASSEMBLY – 109-9357 & 116-2131

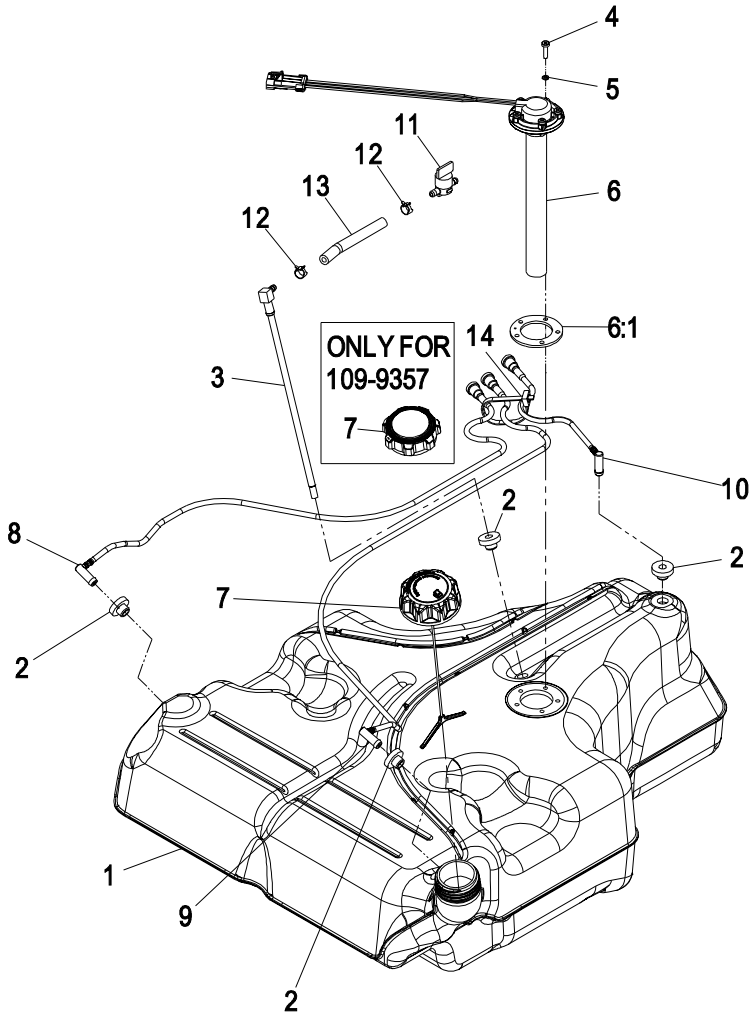

Item	Part No.	Description	Qty.
2	46-6560	Bushing	4
3	116-2459	Kit, Fuel Line With Grommet	1
4	9107944	Screw-Pan	5
5	3253-17	Washer, Lock 3/16	5
6	116-0003	Sender-Fuel Level	1
6:1	109-9620	Gasket-Sender, Fuel	1
7	109-9619	Cap-Fuel (109-9357- Non-CA Units)	1
	116-1704	Cap-Ratcheting Fuel (116-2131 CA Units)	1

Item	Part No.	Description	Qty.
8	116-2460	Kit, Vent Line With Grommet RH	1
9	116-2461	Kit, Vent Line With Grommet LH	1
10	116-2462	Kit, Vent Line With Grommet Rear	1
11	1-603770	Valve, Fuel	1
12	2412-98	Clamp, Hose	2
13	109-0650	Hose-Fuel	1
14	1-303335	Tie, Cable 7 15/16 (Large)	1

ENGINE GROUP – 22HP KAWASAKI

+

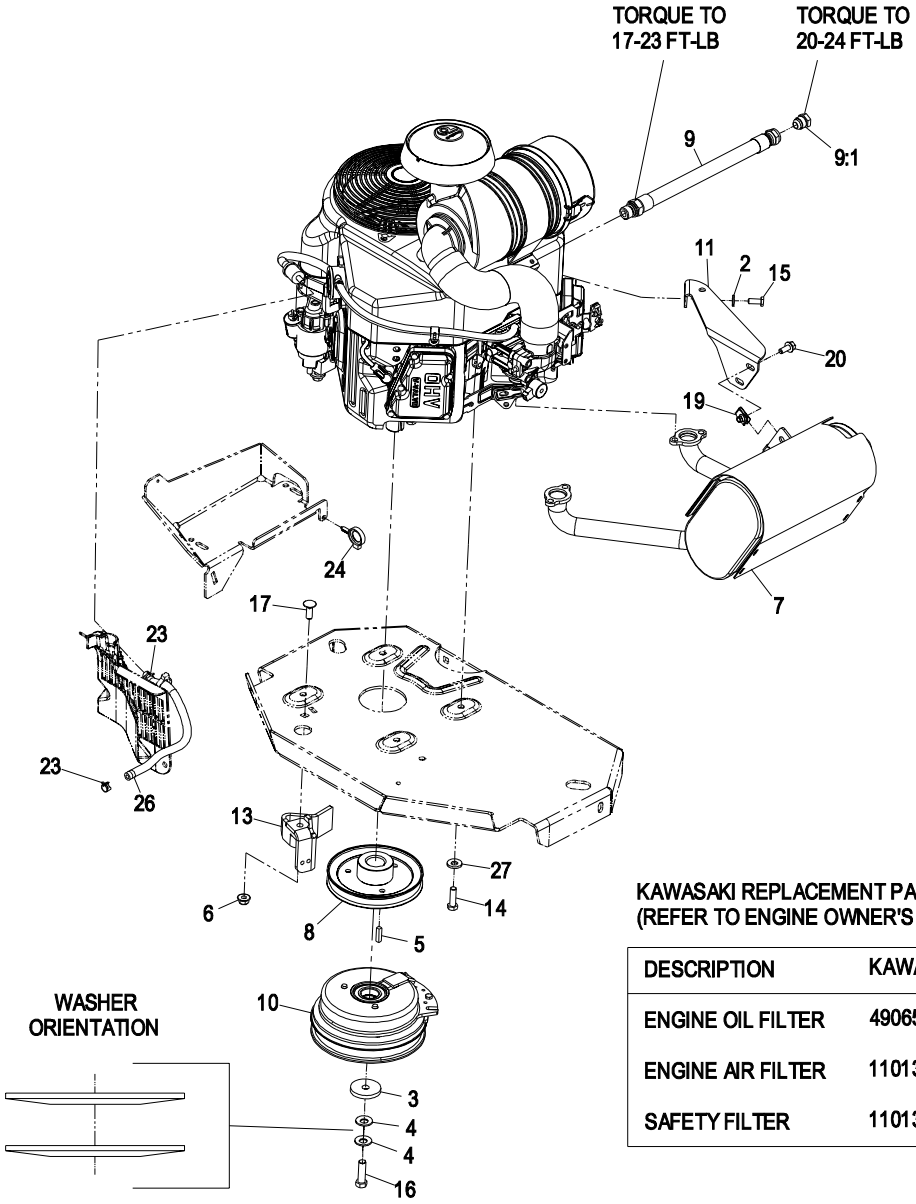

KAWASAKI REPLACEMENT PARTS LIST
(REFER TO ENGINE OWNER'S MANUAL)

DESCRIPTION	KAWASAKI PART
ENGINE OIL FILTER	49065-7007
ENGINE AIR FILTER	11013-7044
SAFETY FILTER	11013-7045

Item	Part No.	Description	Qty.
2	1-303334	Washer, Spring Disc 5/16	1
3	109-6919	Washer, Clutch	1
4	1-603610	Washer, Spring Disc 7/16	2
5	1-807259	Key, Machine 1/4 x 1/4 x 1	1
6	104-8301	Nut, Nyloc 3/8-16 Flg	1
7	116-1715	Muffler	1
8	109-9905	Sheave, W/Hub	1
9	109-4490	Asm, Hose Oil Drain W/Plug	1
9:2	109-1012	Plug	1
10	116-1620	Clutch, CMS-200 W/Spot Brake	1
11	116-1435	Bracket, Muffler	1

Item	Part No.	Description	Qty.
13	116-2612-01	Anchor, Clutch	1
14	323-7	Screw, HH 3/8-16 x 1 1/4	4
15	33114-020	Screw, HH M8-1.25 x 20mm	1
16▲	109-9761	Screw, HH 7/16-20 x 1 1/2 W/Loctite	1
17	3231-22	Bolt, Carriage 3/8-16 x 1	1
19	94-2413	U-Nut 5/16-18	2
20	3234-5	Screw, HH FLG 5/16-18 x 3/4	2
23	2412-98	Clamp, Hose	2
24	105-1853	Clamp-Hose, Hydro	1
26	109-0296	Hose, Fuel 15”	1
27	98-5975	Washer	4

Exmark red touch up paint (spray paint – P/N 1-850337 - .6 oz liquid bottle – P/N 103-9140)

▲ Use Pro-Lock, Nut Type (P/N 1-840022, .5ml tube) on clutch bolt.

ENGINE GROUP – 23-27HP KOHLER

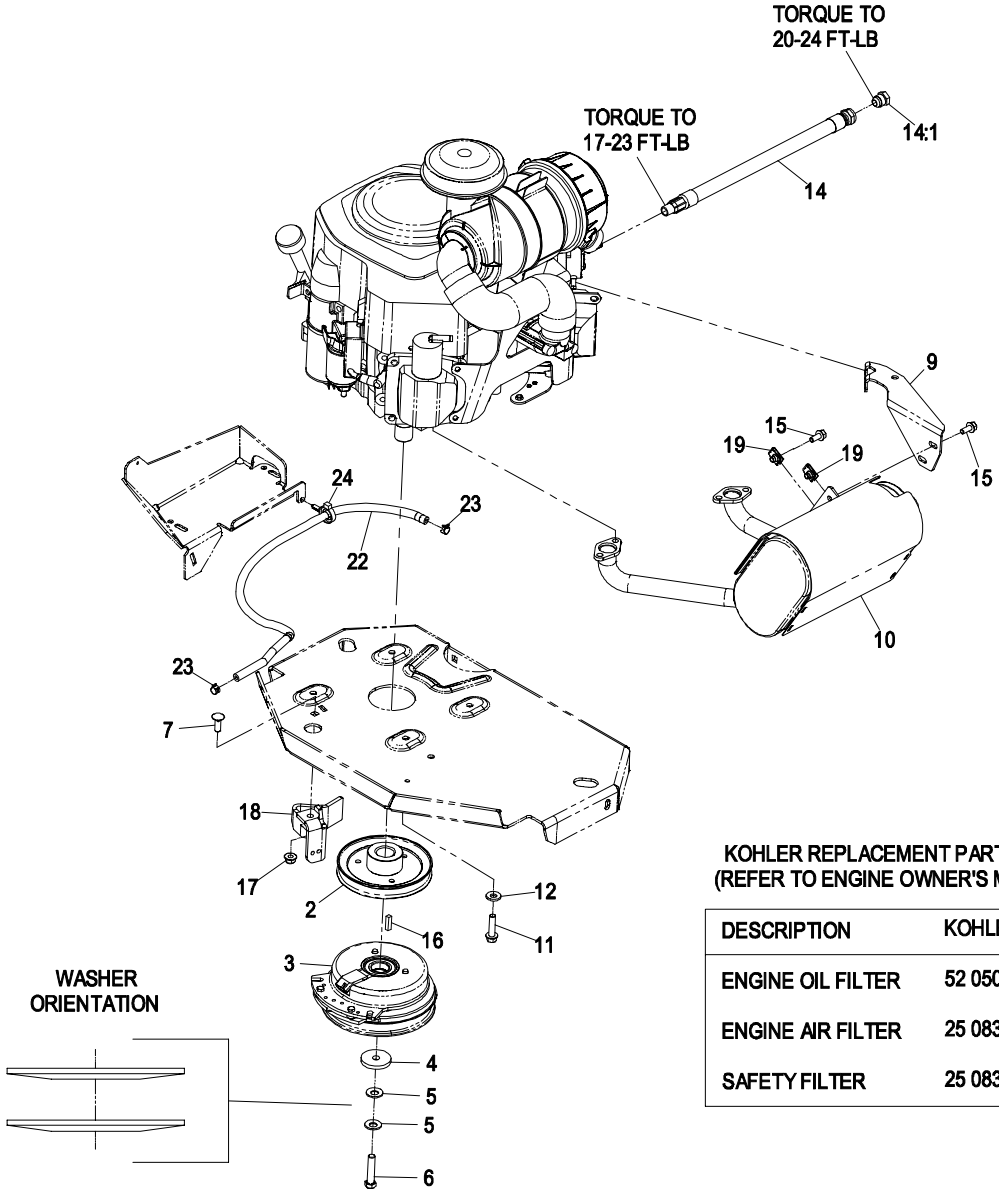

KOHLER REPLACEMENT PARTS LIST
(REFER TO ENGINE OWNER'S MANUAL)

DESCRIPTION	KOHLER PART
ENGINE OIL FILTER	52 050 02
ENGINE AIR FILTER	25 083 01
SAFETY FILTER	25 083 04

Item	Part No.	Description	Qty.
2	109-9905	Sheave	1
3	116-1620	Kit, Clutch CMS 200	1
4	109-6919	Washer, Clutch	1
5	1-603610	Washer, Spring Disc 7/16	2
6▲	109-9762	Screw, HH 7/16-20 x 2 W/Loctite	1
7	3231-22	Bolt, Carriage 3/8-16 x 1	1
9	116-2360	Bracket, Muffler	1
10	116-1713	Muffler	1
11	32144-102	Screw, HWH 3/8-16 X 1 1/2 Taptite	4
12	98-5975	Washer, Spring Disc 3/8	4
14✚	116-0013	Asm, Oil Drain Hose	1

Item	Part No.	Description	Qty.
14:1	109-1012	Plug	1
15	3234-5	Screw, HH FLG 5/16-18 x 3/4	3
16	1-807259	Key, Machine 1/4 x 1/4 x 1	1
17	104-8301	Nut, Nyloc 3/8-16 Flg	2
18	116-2612-01	Anchor, Clutch	1
19	94-2413	U-Nut	3
22	109-0286	Hose, Fuel Line 35"	1
23	2412-98	Clamp, Hose	2
24	105-1853	Clamp, Hose	1
27	1-303435	Washer, Spring Disc 1/4	1
28	33113-020	Screw, HH M6-1 x 12mm	1

Exmark red touch up paint (spray paint – P/N 1-850337 - .6 oz liquid bottle – P/N 103-9140)

✚ Use Teflon Pipe Sealant or equivalent on threads.

▲ Use Pro-Lock, Nut Type (P/N 1-840022, .5ml tube) on clutch bolt.

ENGINE GROUP – 29HP KAWASAKI

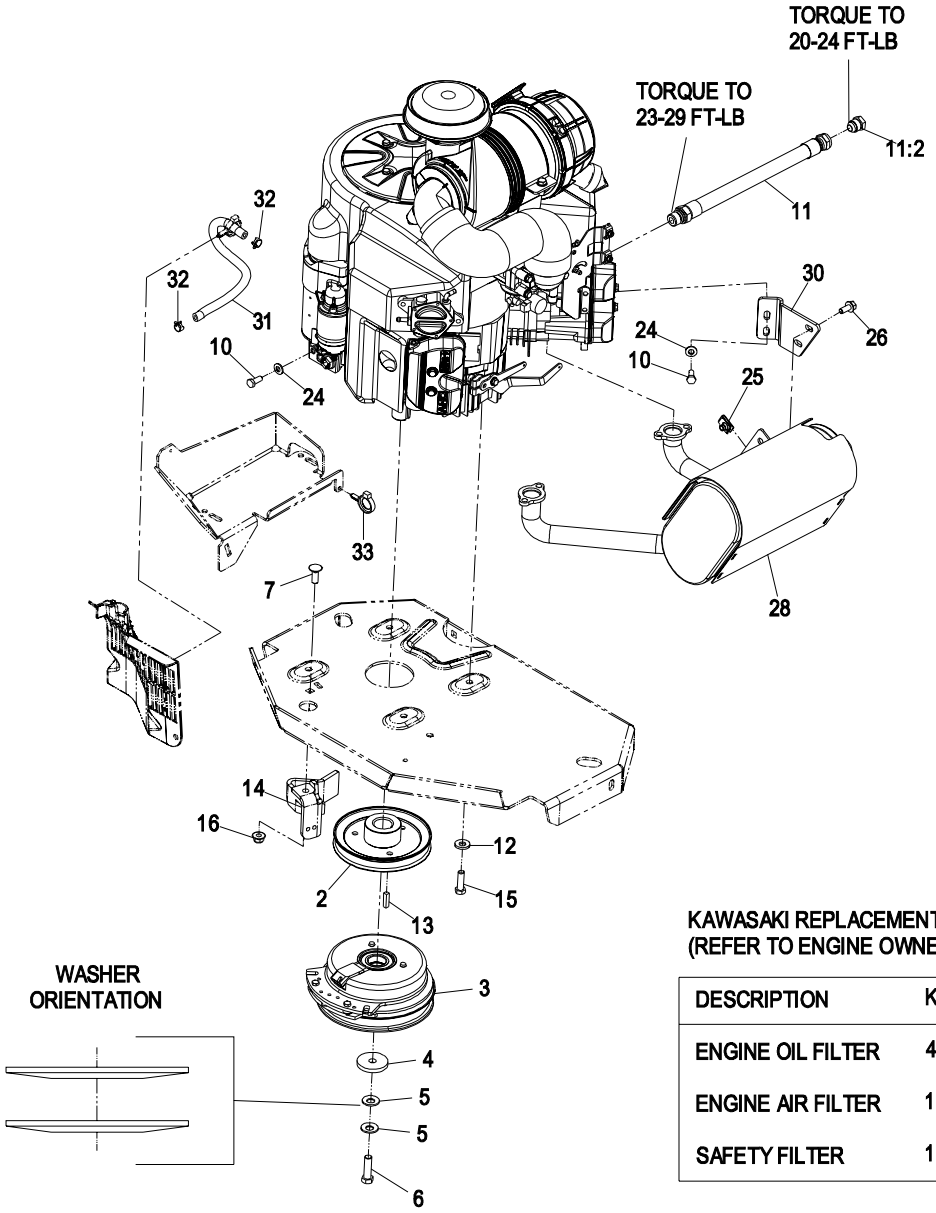

KAWASAKI REPLACEMENT PARTS LIST
(REFER TO ENGINE OWNER'S MANUAL)

DESCRIPTION	KAWASAKI PART
ENGINE OIL FILTER	49065-2078
ENGINE AIR FILTER	11013-7038
SAFETY FILTER	11013-7039

Item	Part No.	Description	Qty.
2	109-9905	Sheave	1
3	116-1620	Kit, Clutch CMS200	1
4	109-6919	Washer-Clutch	1
5	1-603610	Washer, Spring Disc 7/16	2
6▲	109-9761	Screw, HH 7/16-20 x 1 1/2 W/Loctite	1
7	3231-22	Bolt, Carriage 3/8-16 x 1	1
10	33114-020	Screw, HH M8-1.25 x 20mm	3
11	109-4490	Oil Drain Hose Asm	1
11:2	109-1012	Plug	1
12	98-5975	Washer, Spring Disc 3/8	4
13	1-807259	Key, Machine 1/4 x 1/4 x 1	1

Item	Part No.	Description	Qty.
14	116-2612-01	Anchor-Clutch	1
15	323-7	Screw, HH 3/8-16 x 1 1/4	4
16	104-8301	Nut, Nyloc 3/8-16 Flg	1
24	1-303334	Washer, Spring Disc 5/16	3
25	94-2413	U-Nut	2
26	3234-5	Screw, HH FLG 5/16-18 x 3/4	2
28	116-1712	Muffler, 27-31Ka	1
30	116-0203	Bracket-Muffler	1
31	109-0296	Hose, Fuel Line 15"	1
32	2412-98	Clamp, Hose	2
33	105-1853	Clamp-Hose	1

Exmark red touch up paint (spray paint – P/N 1-850337 - .6 oz liquid bottle – P/N 103-9140)

▲ Use Pro-Lock, Nut Type (P/N 1-840022, .5ml tube) on clutch bolt.

ENGINE GROUP – 26HP KAWASAKI LIQUID-COOLED

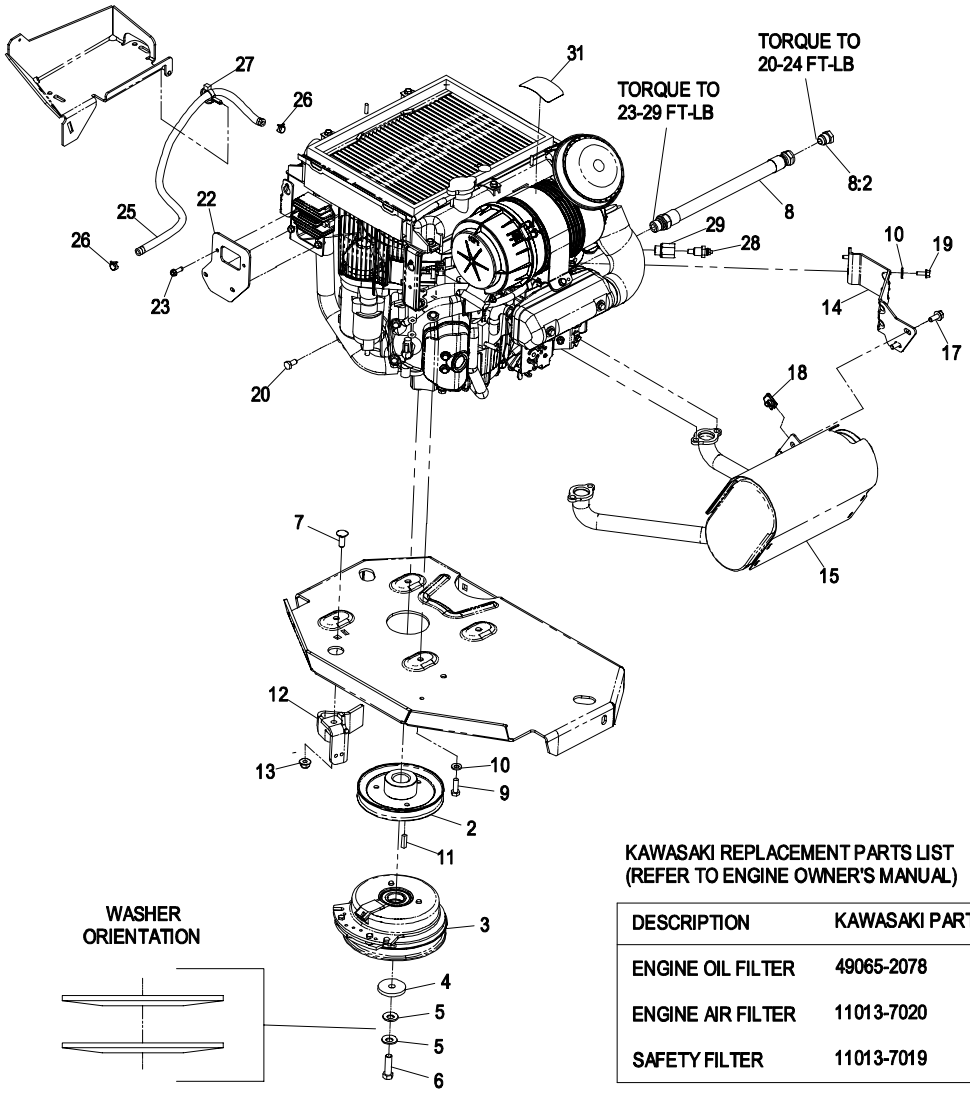

KAWASAKI REPLACEMENT PARTS LIST
(REFER TO ENGINE OWNER'S MANUAL)

DESCRIPTION	KAWASAKI PART
ENGINE OIL FILTER	49065-2078
ENGINE AIR FILTER	11013-7020
SAFETY FILTER	11013-7019

Item	Part No.	Description	Qty.
2	109-9905	Sheave, W/Hub	1
3	116-1620	Clutch, CMS-200 W/Spot Brake	1
4	109-6919	Washer, Clutch	1
5	1-603610	Washer, Spring Disc 7/16	2
6▲	109-9761	Screw, HH 7/16-20 x 1 1/2 W/Loctite	1
7	3231-22	Bolt, Carriage 3/8-16 x 1	1
8	109-4490	Asm, Hose-Oil Drain W/Plug	1
8:2	109-1012	Plug	1
9	33114-025	Screw, HH M8-1.25 x 25mm	4
10	1-303334	Washer, Spring Disc 5/16	6
11	1-807259	Key, Machine 1/4 x 1/4 x 1	1
12	116-2612-01	Anchor, Clutch	1
13	104-8301	Nut, Nyloc 3/8-16 Flg	1
14	109-9219	Bracket, Muffler	1

Item	Part No.	Description	Qty.
15	116-1710	Muffler	1
17	3234-5	Screw, HH FLG 5/16-18 x 3/4	2
18	94-2413	U-Nut	2
19	33103-016	Screw, HH FLG M6-1 x 16mm	2
20	33114-016	Screw, HH M8-1.25 x 16mm	1
22	116-2639-03	Plate, Rectifier Mount	1
23	49-2040	Screw, HWH 1/4-20 x 3/4 TF	2
25	109-0284	Hose, Fuel Line 29"	1
26	2412-98	Clamp, Hose	2
27	105-1853	Clamp, Hose	1
28	98-9346	Sender, Temperature	1
29+	109-9464	Adapter, 3/8-M16	1
31	116-0906	Decal, Shell DEX-COOL	1

Exmark red touch up paint (spray paint – P/N 1-850337 - .6 oz liquid bottle – P/N 103-9140).
Exmark black touch up spray paint – gloss black.)

▲ Use Pro-Lock, Nut Type (P/N 1-840022, .5ml tube) on clutch bolt.

HYDRAULIC GROUP

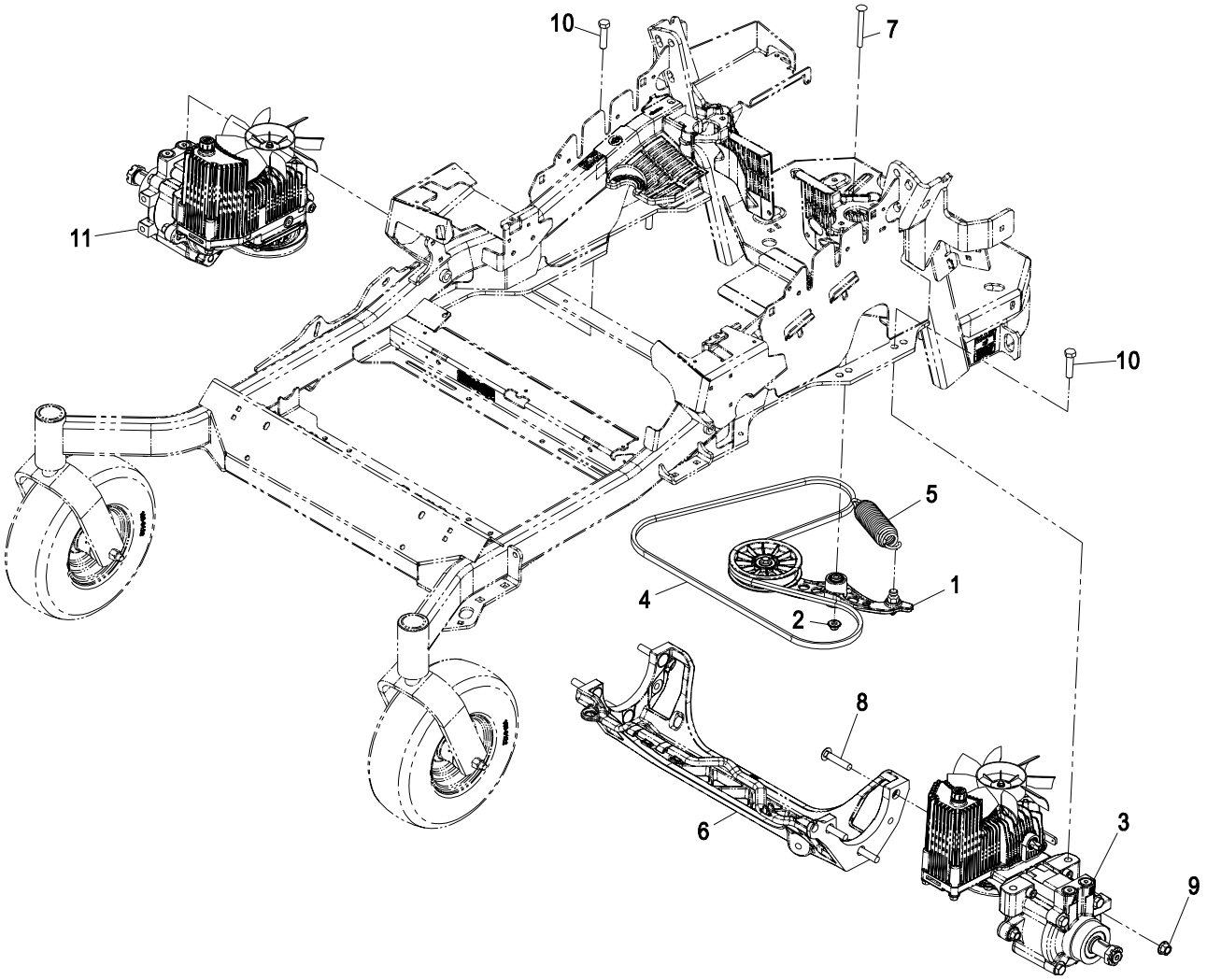

Item	Part No.	Description	Qty.
1	116-1255	Asm, Pump Idler	1
2	109-6658	Nut, Nyloc 3/8-16 Flg	1
3	116-1322	Hydro, LH 12CC W/Check (48” & 52”)	1
	116-1324	Hydro, LH 12CC W/Shock (60” & 72”)	1
4	109-3388	Belt, V	1
5	116-0133	Spring, Extension	1
6	109-9375	Cradle, Machined Hydro	1
7	116-1502	Bolt, Carriage Shoulder 3/8-16 x 3 1/2	1

Item	Part No.	Description	Qty.
8	3233-34	Bolt, Carriage 1/2-13 x 2 1/2	6
9	99-5107	Nut, Lock 1/2-13	6
10	325-8	Screw, HH 1/2-13 x 1 1/4	4
11	116-1323	Hydro, RH 12CC W/Check (48” & 52”)	1
	116-1325	Hydro, RH 12CC W/Shock (60” & 72”)	1
12✚	109-9828	Oil, Exmark Premium Hydro (32 oz)	4
13✚	116-1218	Oil, Exmark Premium Hydro (1 gal)	1
■✚	116-3270	Kit, Hydro Service	1

✚ Not shown

■ Kit contains: (1) V-Belt, (4) Exmark Premium Hydro Oil 32 oz Bottles, and (2) Hydro filters

HYDRAULIC GROUP (cont.)

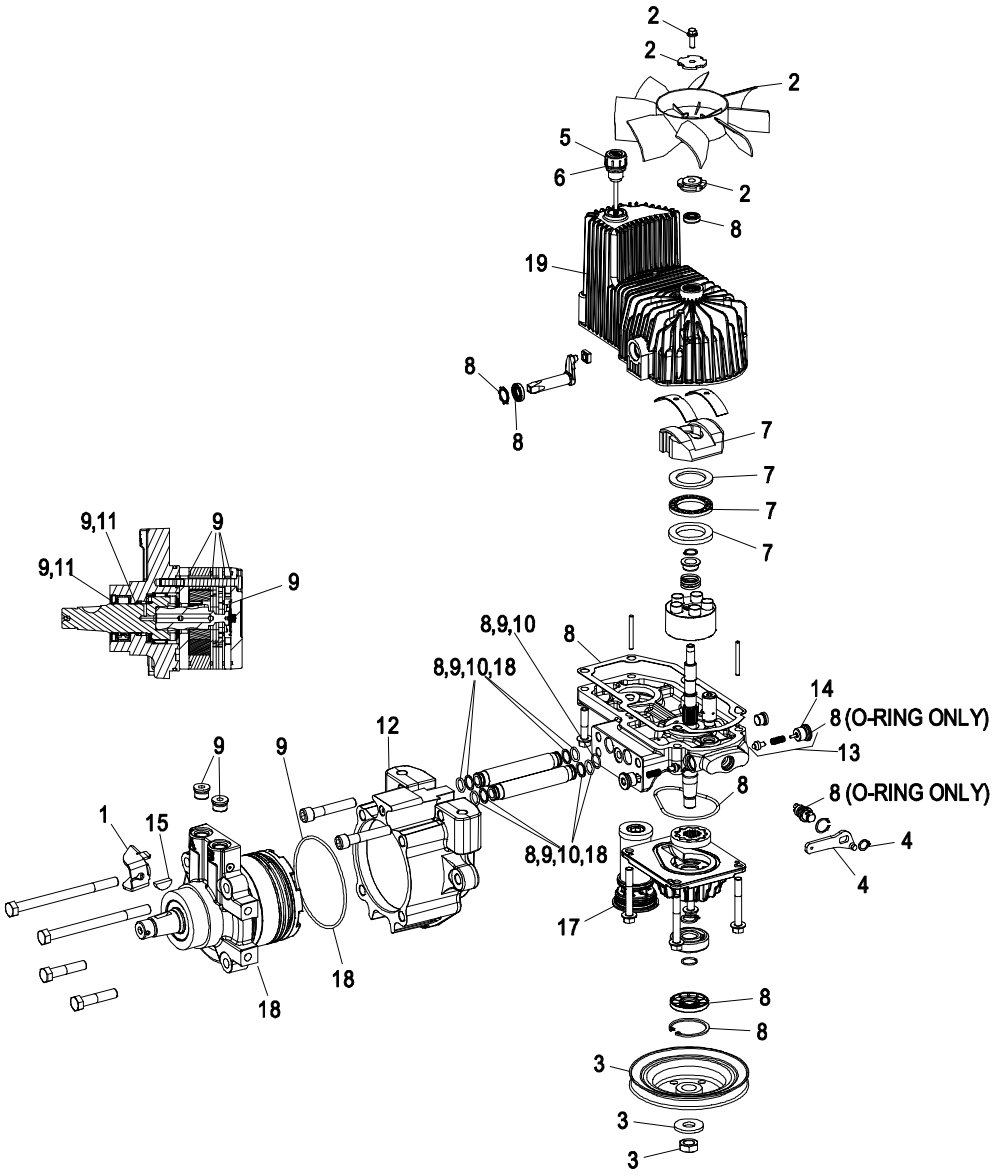

Item	Part No.	Description	Qty.
1	116-1758	Bracket, Anchor Cable	1
2	116-0233	Kit, Fan Hydro	1
3	116-0234	Kit, Pulley Hydro	1
4	116-0235	Handle, Bypass Valve Hydro	1
5	116-0236	Dipstick, Hydro W/Gasket	1
6	116-0237	Gasket, Dipstick Hydro	1
7	116-1367	Kit, Swash Block Hydro	1
8	116-1368	Kit, Pump Seal Hydro	1
9	116-1369	Kit, Motor Seal Hydro	1
10	116-1370	Kit, Tube Seal Hydro	1
11	116-1371	Kit, Output Shaft Seal Hydro	1
12▼	116-1372	Cup, Nose Hydro	1
●	116-2992	Cup, Nose Hydro Dry	1

Item	Part No.	Description	Qty.
13■	116-1630	Asm, Check Valve	1
14■	116-1631	Check Plug W/O-Ring	1
15	3257-42	Key, Woodruff 5/16 x 1	1
16	1-809036	Nut, Slotted 1-20	1
	116-1399	Locknut, Wheel Motor	2
17	116-0164	Filter, Hydro	1
18▼	116-2984	Motor, Wheel LH Wet 240cc	1
▼	116-2985	Motor, Wheel RH Wet 240cc	1
●	116-2988	Motor, Wheel LH Dry 240cc	1
●	116-2989	Motor, Wheel RH Dry 240cc	1
19	116-3287	Housing, LH	1
	116-3288	Housing, RH	1

■ For 12CC W/Check Hydros – 48” & 52” Only

▼ For Units with hydro S/N below LH: 092570032 RH: 092570042

● For Units with hydro S/N LH:092570032 RH: 092570042 & higher

PUMP IDLER ASSEMBLY – 116-1255

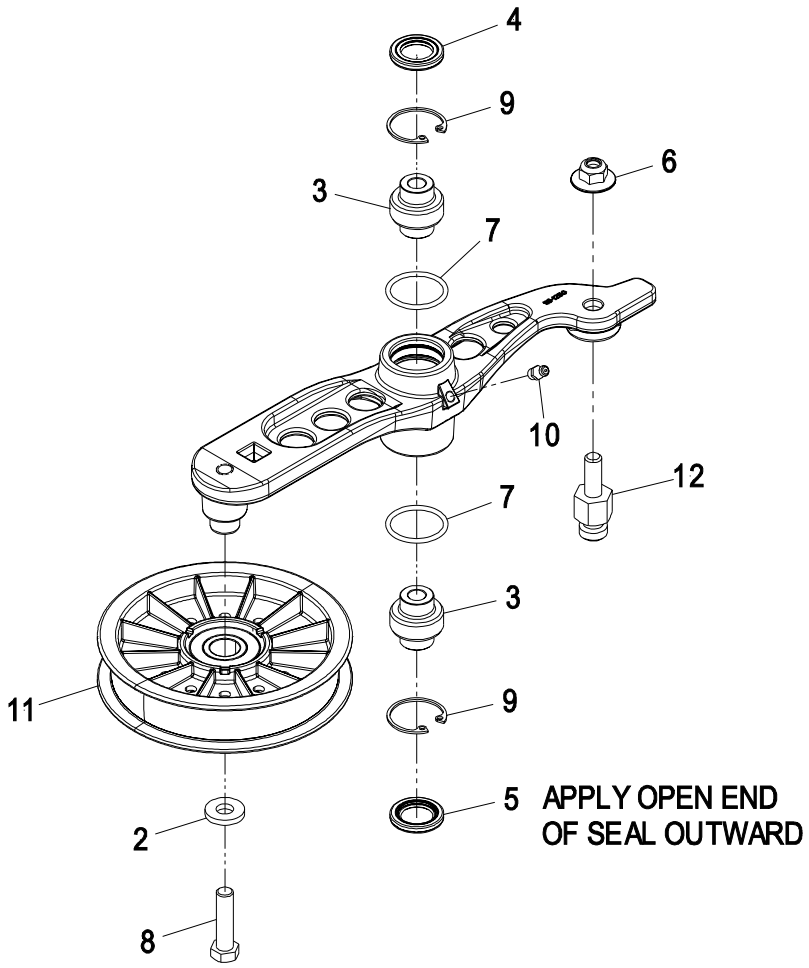

Item	Part No.	Description	Qty.
2	43-0940	Spacer-Hub, Blower	1
3	103-3504	Bearing, Spherical	2
4	103-3505	Seal, Double Lip	1
5	103-3506	Seal, Single Lip	1
6	109-6658	Nut, Nyloc 3/8-16 Flg	1
7	106-7159	O-Ring	2

Item	Part No.	Description	Qty.
8	323-8	Screw, HH 3/8-16 x 1 1/2	1
9	32120-10	Ring, Retaining	2
10	302-19	Zerk, 1/4-28 Str	1
11	109-8076	Pulley, Idler 5" X 1" Nylon	1
12	109-7399	Pin, Spring Anchor	1

ELECTRICAL GROUP

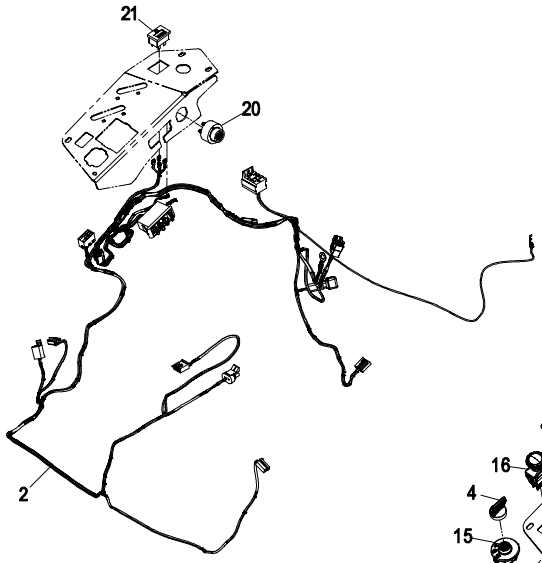

LIQUID COOLED
WIRE HARNESS

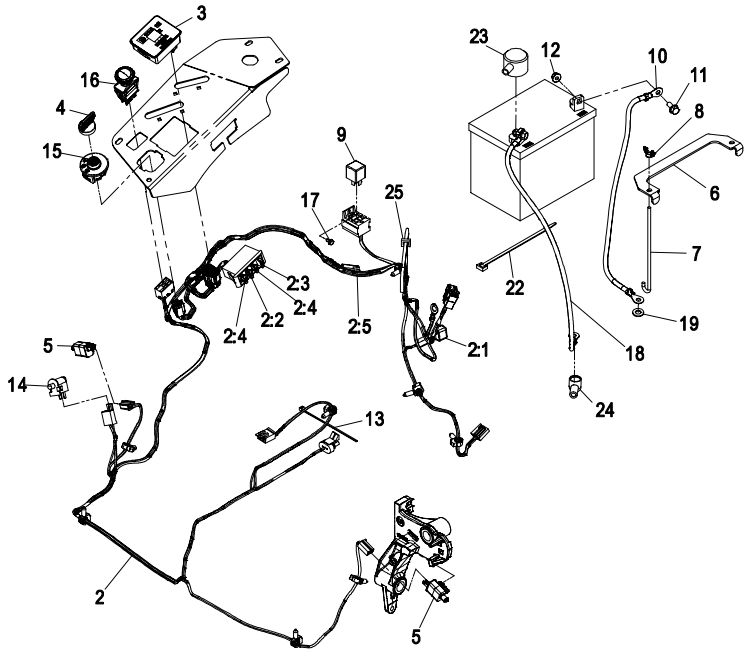

AIR COOLED
WIRE HARNESS

Item	Part No.	Description	Qty.
2▲	115-3869	Harness, Wire, Main (Liquid-Cooled)	1
	115-2796	Harness, Wire, Main (Air-Cooled)	1
2:1	103-3895	Diode, TVS	1
2:2	218-578	Fuse, 10 Amp	1
2:3	109355	Fuse, 15 Amp	1
2:4	109102	Fuse-25 Amp	2
2:5	116-0053	Cap, Plug	1
3	116-1356	Asm, Fuel/Hour Meter	1
4	103-2106	Key, Exmark Logo	1
	1-603511	Key, Ignition	1
5	110-6765	Switch, Single Pole No	2
6	116-0042-03	Strap, Tie Down, Battery	1
7	1-633651	Bolt, Holddown	2
8	1-543792	Wingnut, Nyloc 1/4-20	2
9	1-643275	Relay, 12VDC 40 Amp	1

Item	Part No.	Description	Qty.
10	114-1218	Cable-Battery, Negative	1
11	3234-5	Screw, HH FLG 5/16-18 x 3/4	2
12	104-8300	Nut, Nyloc 5/16-18 Flg	2
13	1-303287	Tie, Cable 5 1/2 (Small)	3
14	82-2190	Switch	1
15	117-2221	Switch, Ignition	1
16	116-0124	Switch, PTO, 10A	1
17	104-2065	Screw, HWH #10-24 x 3/8 Taptite	1
18	115-3864	Cable, Battery, Positive	1
19	3256-24	Washer, 3/8 SAE	1
20	103-0205	Alarm, Tone Dual	1
21	110-0941	Gauge, Temperature	1
22	1-303335	Tie, Cable 7 15/16 (Large)	1
23	109-2407	Insulator, Solenoid	1
24	1-543393	Insulator, Battery	1

Exmark black touch up spray paint - gloss black.

▲ Use dielectric grease on all wiring harness connectors.

DECAL GROUP

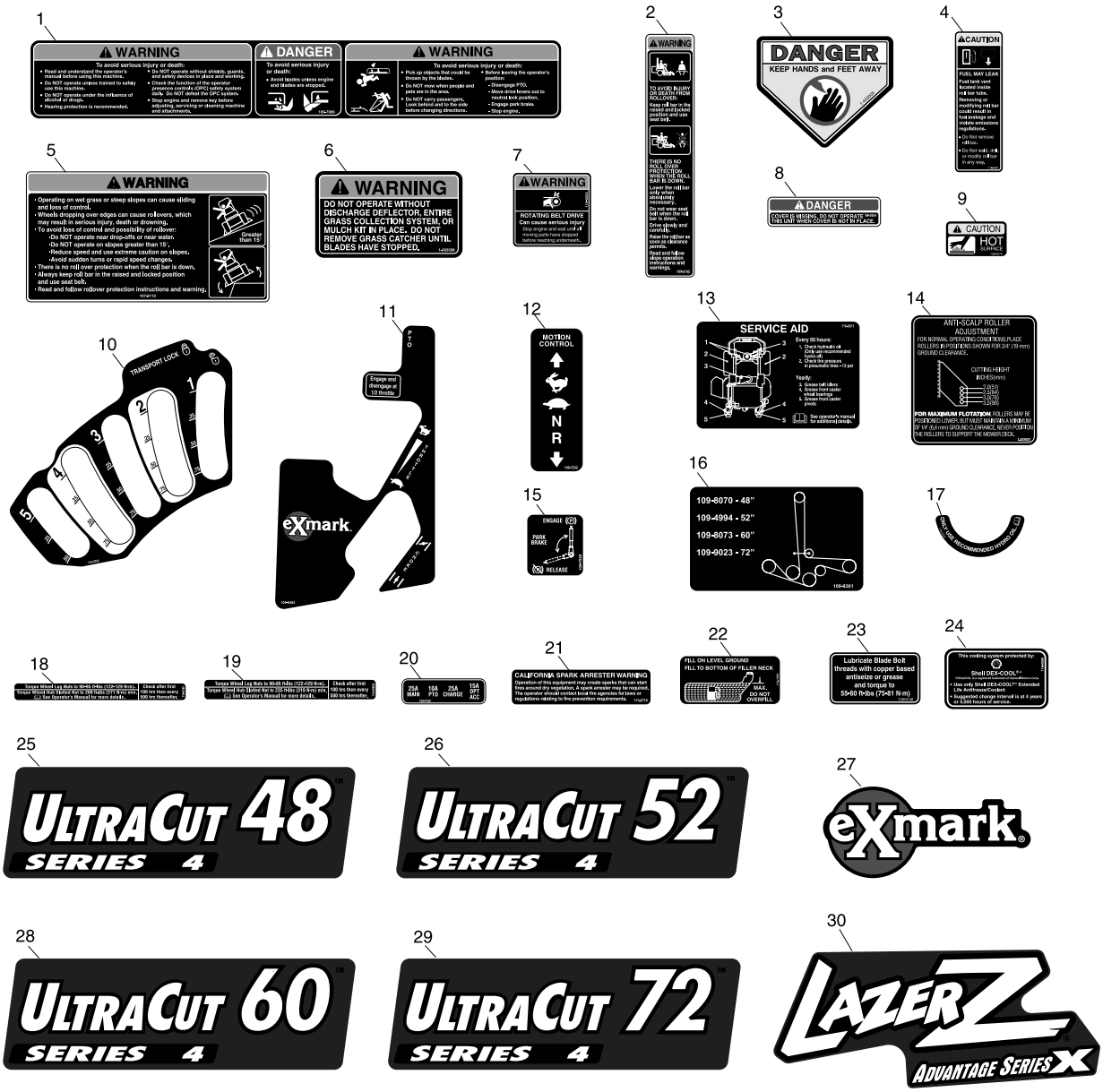

Item	Part No.	Description	Qty.
1	109-7069	Decal, Console	1
2	107-2102	Decal, ROPS Folding	1
3	1-403005	Decal, Danger	2
4	116-0090	Decal, Caution Fuel Vent	1
5	107-2112	Decal, Warning Slope	1
6	1-303508	Decal, Discharge Warning	1
7	116-0205	Decal, Belt Drive	2
8	98-5954	Decal, Danger	2
9	103-2076	Decal, Hot Surface	3
10	116-0752	Decal, Cut of Height	1
11	109-8483	Decal, Control Panel	1
12	109-7232	Decal, Motion Control	2
13	116-0211	Decal, Service Aid	1
14	1-633922	Decal, Anti-Scalp	1
15	109-7929	Decal, Park Brake	1

Item	Part No.	Description	Qty.
16	109-9361	Decal, Belt Routing	1
17	116-0157	Decal, Hydro Oil	1
18	116-0165	Decal, Wheel Hub	2
19	116-2643	Decal, Wheel Hub	2
20	109-7330	Decal, Fuse	1
21	117-2718	Decal, Spark Arrester	1
22	116-1654	Decal, Fuel Fill	1
23	109-3148	Decal, Bolt Torque	1
24	116-0906	Decal, Shell DEXCOOL	1
25	109-9437	Decal, UltraCut 48 Series 4	1
26	109-9438	Decal, UltraCut 52 Series 4	1
27	103-2883	Decal, Exmark Logo	2
28	109-9439	Decal, UltraCut 60 Series 4	1
29	109-9440	Decal, UltraCut 72 Series 4	1
30	116-2350	Decal, Lazer AS	1

.

AIR-COOLED ELECTRICAL DIAGRAM

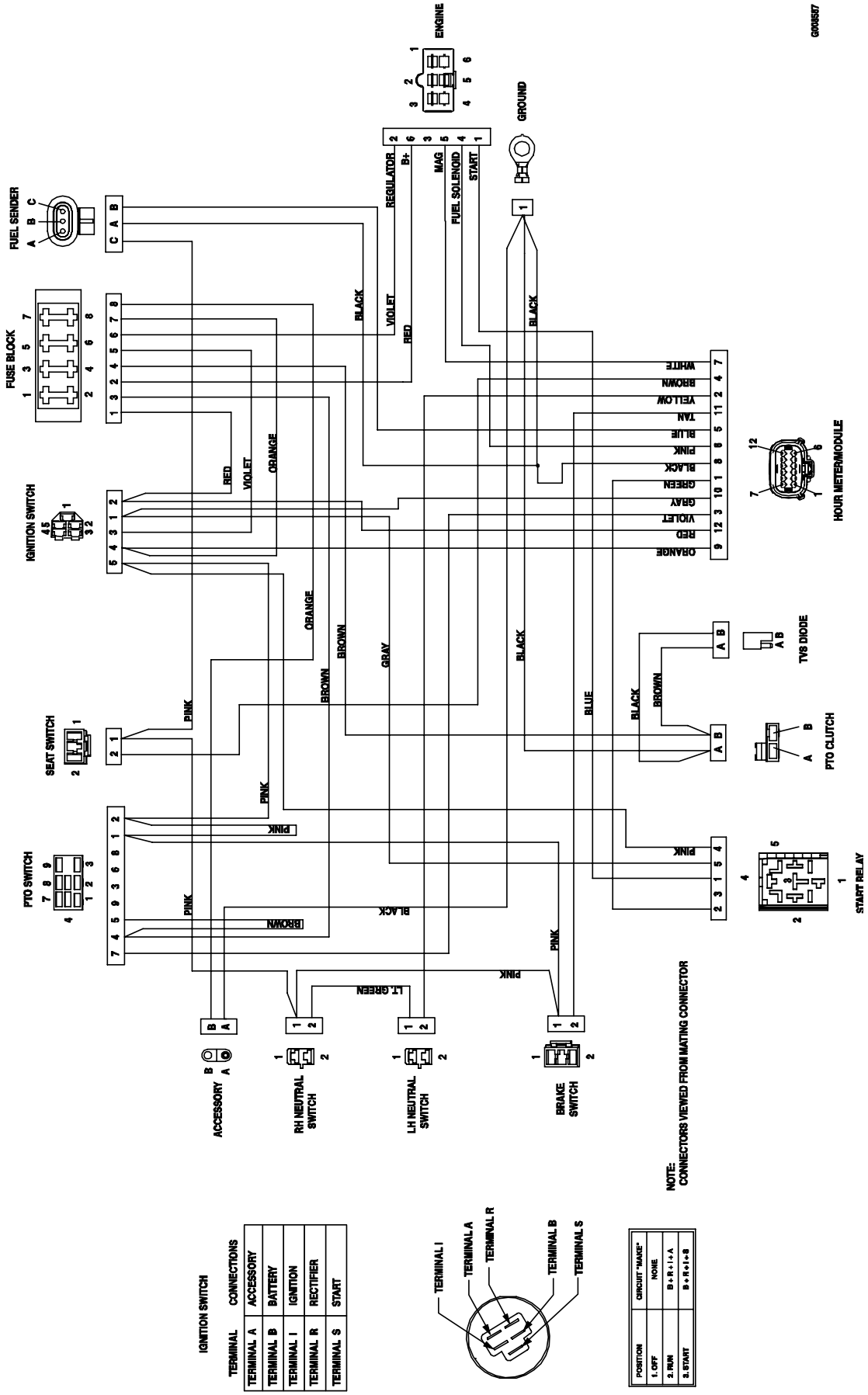

LIQUID-COOLED ELECTRICAL DIAGRAM

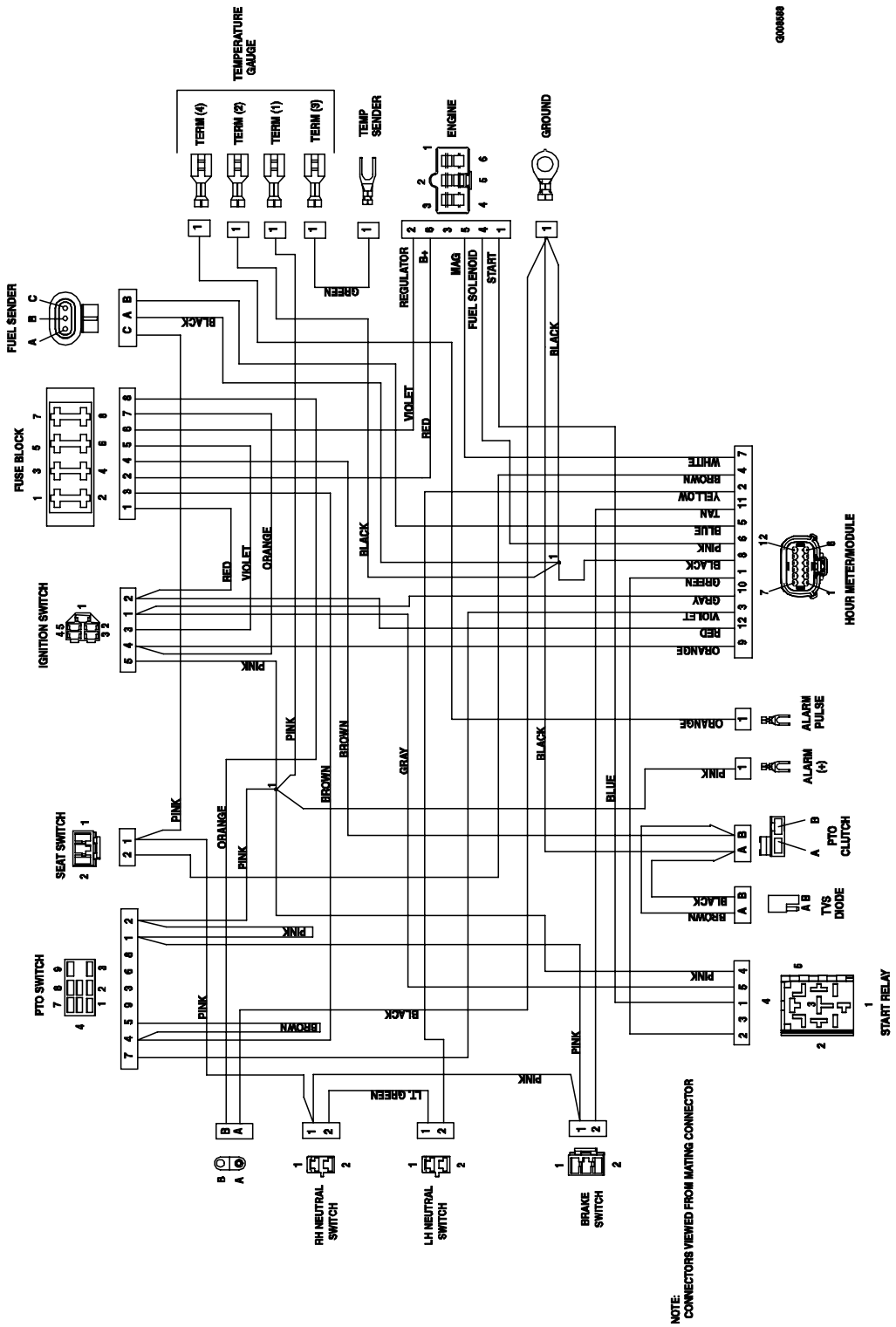

IGNITION SWITCH

TERMINAL	CONNECTIONS
TERMINAL A	ACCESSORY
TERMINAL B	BATTERY
TERMINAL I	IGNITION
TERMINAL R	RECTIFIER
TERMINAL S	START

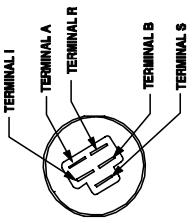

POSITION	CIRCUIT "MAKE"
1. OFF	NONE
2. RUN	B+R+I+A
3. START	B+R+I+S

AIR-COOLED ELECTRICAL LOGIC SCHEMATIC

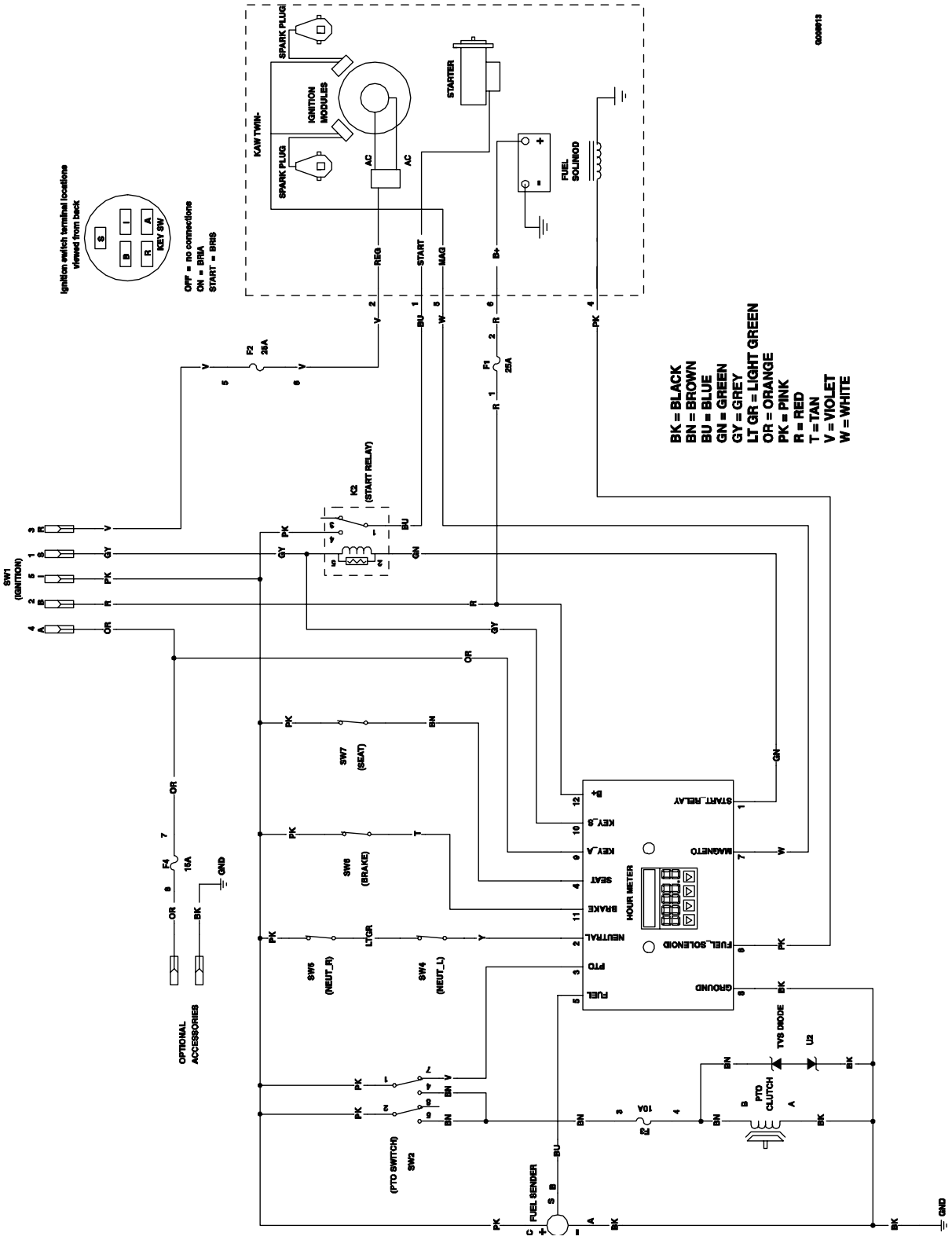

LIQUID-COOLED ELECTRICAL LOGIC SCHEMATIC

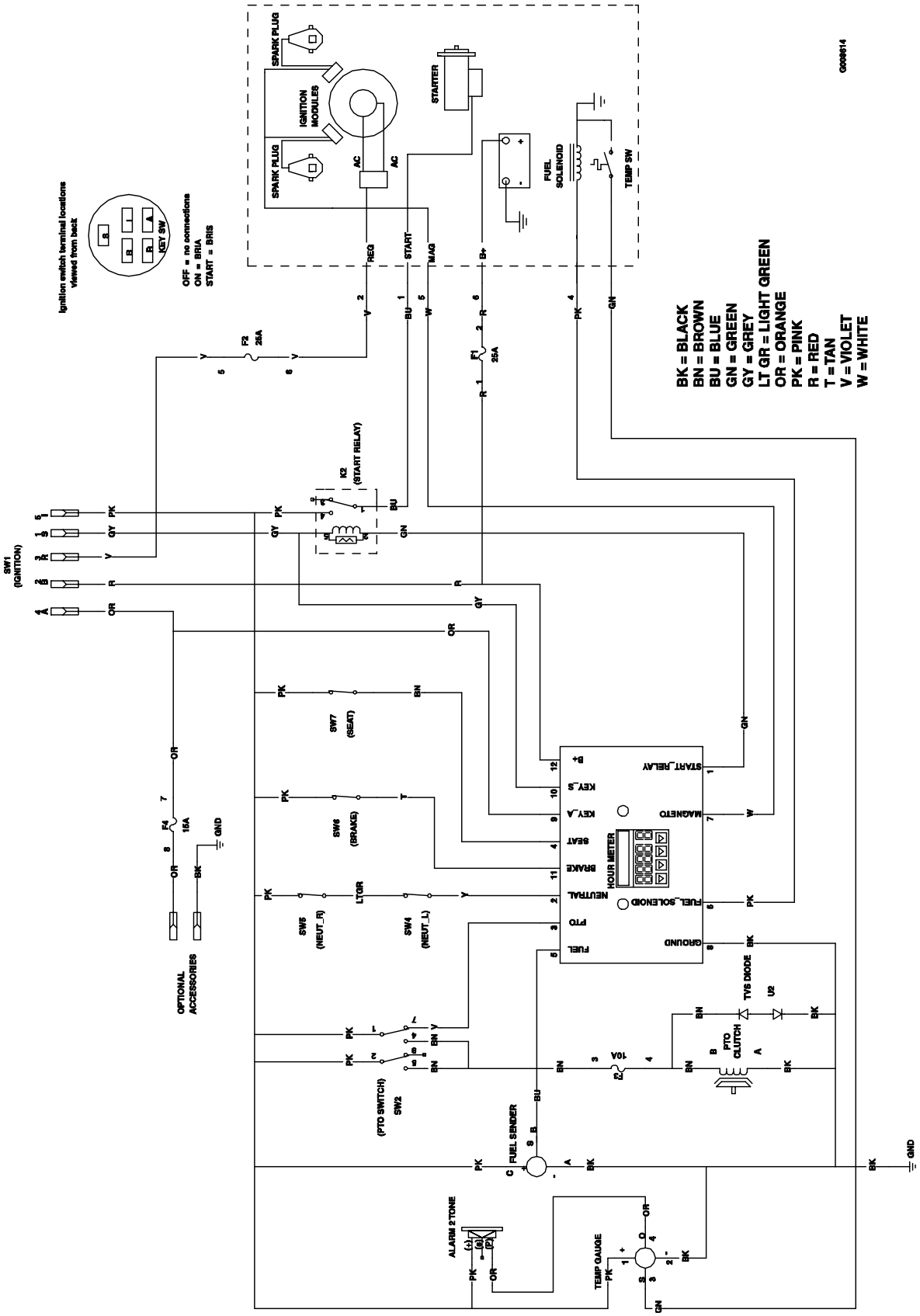

NOTES

NOTES

SERVICE RECORD

Date	Description of Work Done	Service Done By

NEW EXMARK PREMIUM HYDRO OIL

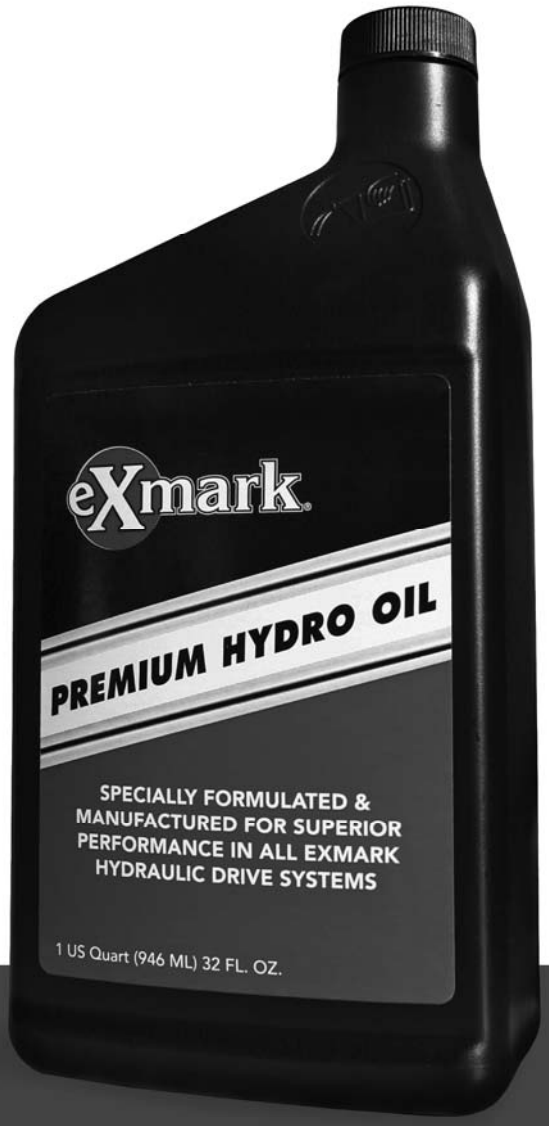

BENEFITS

- Designed & manufactured with superior anti-wear protection
- Superior thermal stability
- Consistent hydro performance
- Superior shear resistance under heavy loads
- Field tested & proven performance
- Twice the shear stability of competing oils
- Enhanced control performance
- Specially formulated for any Exmark hydraulic system

NOW AVAILABLE FOR PURCHASE

Part No. 109-9828

eXmark®

SEE EXMARK'S COMPLETE LINE OF ACCESSORIES

MID-MOUNT RIDING ACCESSORIES

CUSTOM RIDE SEAT SUSPENSION SYSTEM
FULL SUSPENSION SEAT
DECK LIFT ASSIST KIT
HITCH KIT
LIGHT KIT
12V POWER PORT
MICRO-MULCH SYSTEM
OPERATOR CONTROLLED DISCHARGE
ROLL OVER PROTECTION SYSTEM (ROPS)
SUN SHADE
TRASH CONTAINER
TURF STRIPER
ULTRA VAC COLLECTION SYSTEM
ULTRA VAC QUICK DISPOSAL SYSTEM

OUT-FRONT RIDING ACCESSORIES

CUSTOM RIDE SEAT SUSPENSION SYSTEM
DUAL-TAIL WHEEL
FLOOR PAN EXTENDER
HITCH KIT
LIGHT KIT
MICRO-MULCH SYSTEM
ROLL OVER PROTECTION SYSTEM (ROPS)
SNOW BLADE
SNOWBLOWER
SUN SHADE
TRASH CONTAINER
ULTRA VAC COLLECTION SYSTEM
ULTRA VAC QUICK DISPOSAL SYSTEM
WEATHER CAB

WALK-BEHIND ACCESSORIES

GRASS CATCHER
MICRO-MULCH SYSTEM
TURF STRIPER
STANDON

Place Model No. and Serial No. Label Here (Included in the Literature Pack or Fill in Below

Model No. _____

Serial No. _____

Date Purchased _____

Engine Model No. and Spec. No. _____

Engine Serial No. (E/No) _____

© 2010 Exmark Mfg. Co., Inc.
All Rights Reserved

Industrial Park Box 808
Beatrice, NE 68310
(402) 223-6300
Fax (402) 223-5489

Part No. 4500-564 Rev. D
Printed In USA

www.exmark.com