PIONEER®

Model No. PNS740GKC60RA3—Serial No. 316000000 and Up

Picture below may not reflect actual product.

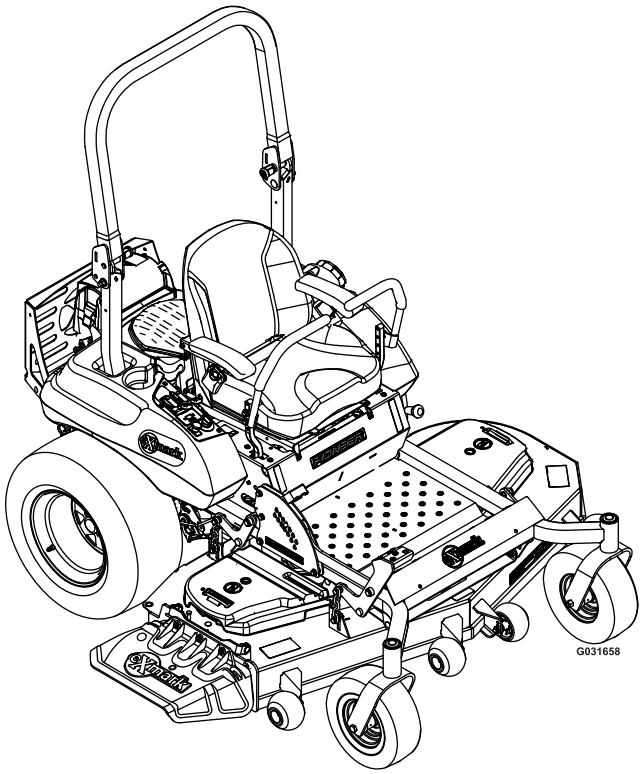

Parts Manual

Part No. 4502-664 Rev. A

Ordering Replacement Parts

To order replacement parts, please supply the part number, the quantity, and the description of each part desired.

Understanding Reference Numbers

Each identified part in an illustration has a reference number. The reference number for a part also appears in the parts list, along with other information about the part.

This catalog uses two special reference number formats, one to indicate parts in a service assembly and another to indicate the quantity of a given part in an illustration.

Service Assembly Reference Numbers

Parts in service assemblies have reference numbers in the form a:b. The a represents the reference number of the entire service assembly and the b represents a sequential number unique to each part within the service assembly.

For example, a wheel assembly might be identified by reference number 6, the tire by 6:1, the valve by 6:2, and the wheel by 6:3. When you order the assembly identified by reference number 6, you receive all parts identified by reference numbers 6:1,6:2, and 6:3. However, you may also order any part individually. Reference numbers of this type appear in illustration and in parts lists.

Reference Numbers Indicating Quantity

In an illustration, if a reference number indicates more than one part, the reference number has the form nX y. The n represents the quantity of the part, the X is the multiplication symbol, and the y represents the reference number.

For example, in an illustration, the reference number 2X 37 means that two of the parts identified by reference number 37 are indicated.

List of Abbreviations

AR: as required

ASM: assembly

BBC: blade brake control

BHTF: button head thread forming

CARR: carriage

CCW: counter clockwise

CW: clockwise

DEG: degrees

DPA: Dual Point Adjustment

ECM: electronic control module

EXT: external

FH: flat head

GA: gauge

HD: heavy-duty

HF: hex flange

HH: hex head

HHF: hex head flange

HHFTF: hex head flange thread forming

HJ: hex jam

HLH: hex lag head

HOC: height-of-cut

HP: high pressure

HSBH: hex socket button head

HSFH: hex socket flat head

HSH: hex socket head

HWH: hex washer head

HWHTF: hex washer head thread forming

HYD: hydraulic

LH: left hand

LP: low pressure

LPG: Liquefied Petroleum Gas

NI: nylon insert

NPTF: national pipe thread fine

PFH: phillips flat head

PPH: phillips pan head

PPHTF: phillips pan head thread forming

PRH: phillips round head

PTH: phillips truss head

PTO: power-take-off

RH: right hand

ROPS: roll-over protection system

RRB: rear roller brush

SFH: slotted fillister head

SHH: slotted hex head

SHWH: slotted hex washer head

SPH: slotted pan head

SQH: square head

SRH: slotted round head

STD: standard

TAP: self tapping

TTH: torx truss head

Touch Up Paint

Exmark black touch up spray paint – gloss black.

Exmark red touch up paint (spray paint – P/N 1-850337 - .6 oz liquid bottle – P/N 103-9140).

© 2015—Exmark Mfg. Co., Inc.
Industrial Park Box 808
Beatrice, NE 68310

Contact us at www.Exmark.com.
Printed in the USA.
All Rights Reserved

If your Exmark dealer does not have the Exmark part in stock, Exmark will get the parts to the dealer the next business day or the part will be FREE Guaranteed!! (Some restrictions apply. See your participating Exmark Dealer for details.)

Contents

Complete Deck Assembly 4
Deck Assembly 6
Deck W/Decals Assembly No. 126-1967 8
Idler Assembly No. 126-0853 10
Idler Arm W/Bearings Assembly 12
Discharge Tunnel Assembly No. 126-1985 14
Main Frame Assembly 16
Main Frame W/Decals Assembly No. 126-1993 18
Caster Wheel Assembly No. 117-0361 20
Roll-Over Protection System Assembly No. 116-3498 22
Deck Lift Assembly 24
Seat Assembly 26
Seat W/Tracks Assembly No. 126-2802 28
Controls Assembly 30
Motion Control Assembly 32
LH Motion Control Assembly 34
RH Motion Control Assembly 36
Fuel Tank Mounting Assembly 38
Fuel Tank Assembly No. 116-4610 40
Engine Assembly 42
Hydraulic Assembly 44
RH Transaxle Assembly 46
LH Transaxle Assembly 48
Electrical Assembly 50

Complete Deck Assembly

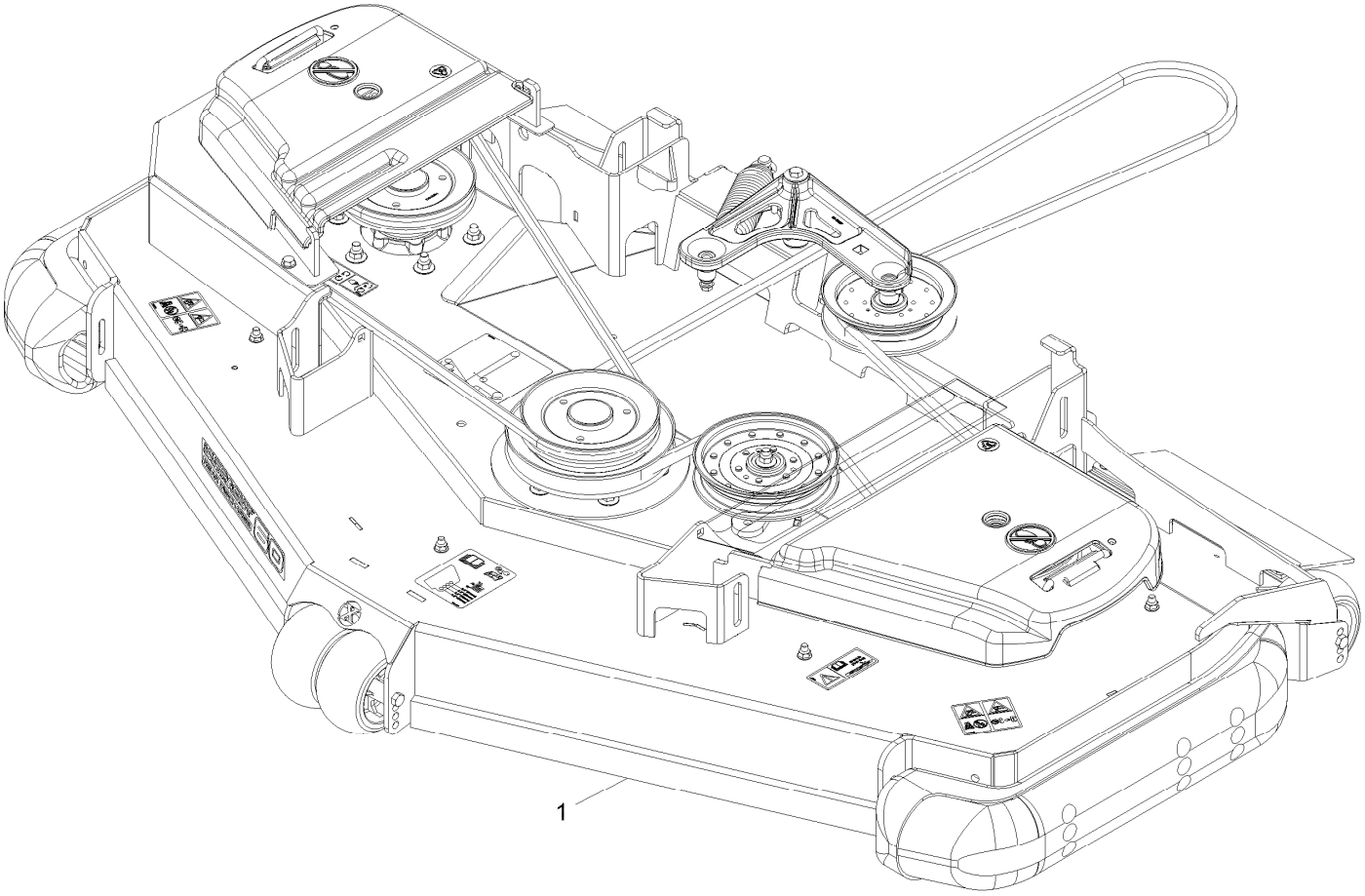

Complete Deck Assembly (continued)

Ref.	Part Number	Qty.	Description
1	126-4011	1	ASM-Deck Complete Pns 60Rd

Deck Assembly

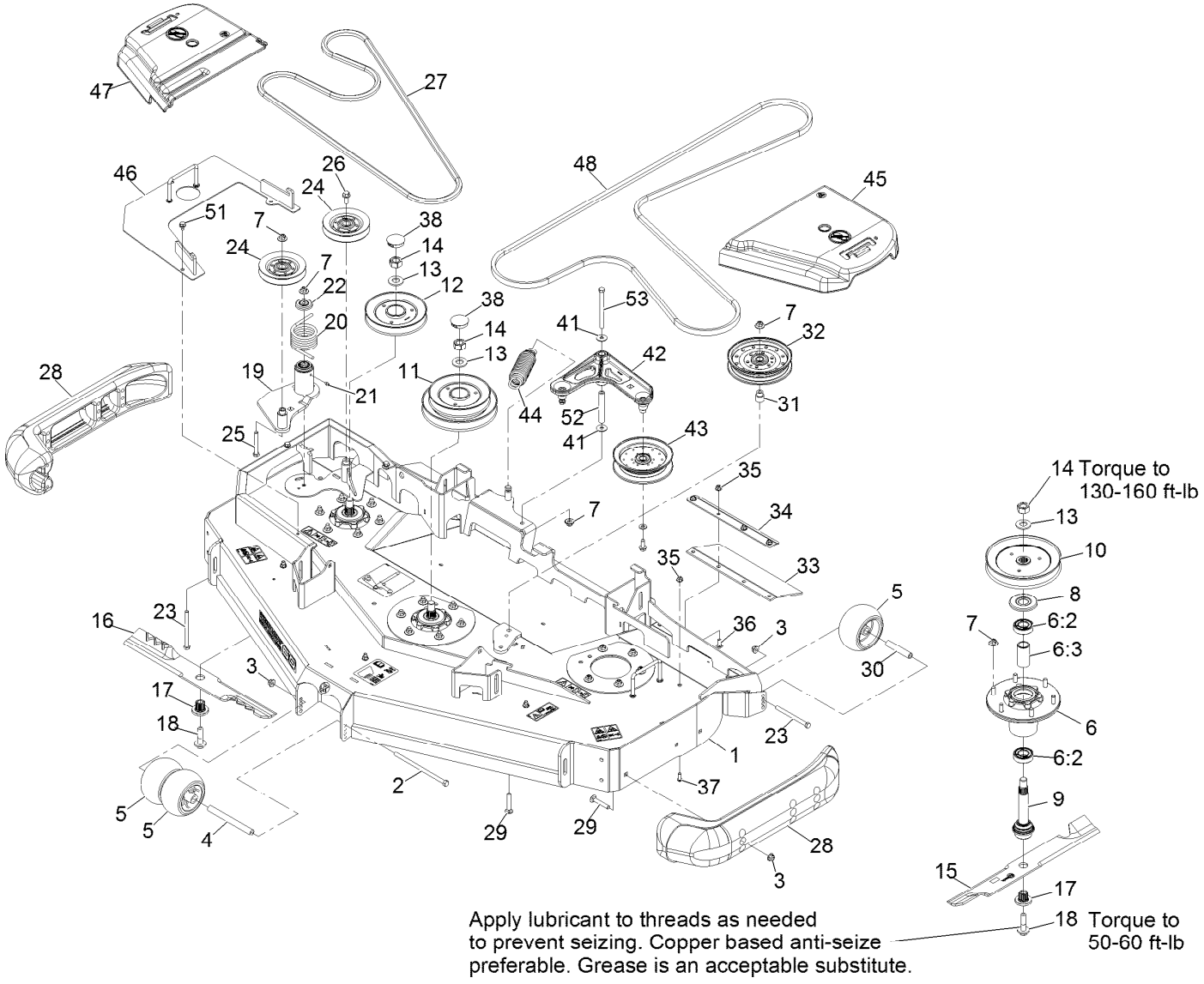

Deck Assembly (continued)

Ref.	Part Number	Qty.	Description
1	126-1967	1	Deck-Pioneer 60Rd,W/Decals
2	108-5388	1	Screw-HH
3	104-8301	9	Nut-Nyloc 3/8-16 Flg
4	98-5967	1	Spacer-Wheel
5	1-603299	4	Roller-Scalp, Anti
6	116-3344	3	ASM-Cutter Hsg With Bearings
6:2	116-0720	2	Bearing-Ball
6:3	116-3312	1	Spacer-Bearing
7	109-6658	22	Nut-Nyloc 3/8-16 Flg
8	116-1286	3	Guard,Bearing Top .989
9	116-3341	3	ASM-Spindle And Seal
10	116-0676	1	Sheave,Blade Drive 7.25
11	126-0352	1	Sheave, Double 60Rd
12	126-0354	1	Sheave-Rd Rev Drive Series 4
13	103-2802	3	Washer-Spring Disc 3/4
14	116-7306	3	Nut-Hex
15	103-6388	2	Blade, Low Lift
15	103-6403	2	Blade, Notched
15	116-5174	2	Blade-Extreme 2, 20.50"
16	116-8181	1	Blade-Extreme 2-20.50, Rd60
16	116-8196	1	Blade-Low Lift 20.5, Rd60
17	103-3037	3	Bushing, Splined
18	109-9220	3	Screw-Sems 1/2-20 X 2.19
19	126-0853	1	Idler ASM
20	108-1921	1	Spring-Torsion
21	302-19	1	Zerk-1/4-28 Str
22	103-2916	1	Guard-Top
23	323-23	3	Screw-HH 3/8-16 X 4-1/2
24	126-1478	2	Sheave
25	323-13	1	Screw-HH 3/8-16 X 2 3/4
26	3234-11	1	Screw-HH Flg 3/8-16 X 1
27	116-8187	1	Belt
28	112-1479	2	Skid-Bumper, Deck
29	3231-7	7	Bolt-Carriage 3/8-16 X 2 1/4
30	98-7912	2	Tube-Spanner
31	1-633456	1	Bushing, Idler
32	116-4670	1	Pulley-Idler, Flat
33	116-8191	2	Guard-Tire
34	126-0413-01	2	Support-Outer Flap
35	104-8300	14	Nut-Nyloc 5/16-18 Flg
36	3230-16	8	Bolt-Carriage 5/16-18 X 7/8
37	3274-55	6	Screw-Button Head 5/16-18 X 3/4
38	116-2253	2	Plug,Black Nylon 1.75
41	52-2860	2	Washer
42	126-0976	1	ASM-Idler Arm W/Bearings
43	116-4668	1	Idler-Pulley, Flanged
44	116-6317	1	Spring-Extension
45	126-1989	1	Cover-Belt, LH Pioneer Rd60
46	126-1990-01	1	Cover-Reverse Drive, Pioneer 60Rd
47	116-0094	1	Cover-Belt, RH
48	1-413093	1	Belt, Deck Drive
51	9266934	3	Screw-HWH 5/16 X 1/2 Tf
52	116-5111	1	Bushing
53	323-38	1	Screw-HH 3/8-16 X 4 3/4

Deck W/Decals Assembly No. 126-1967

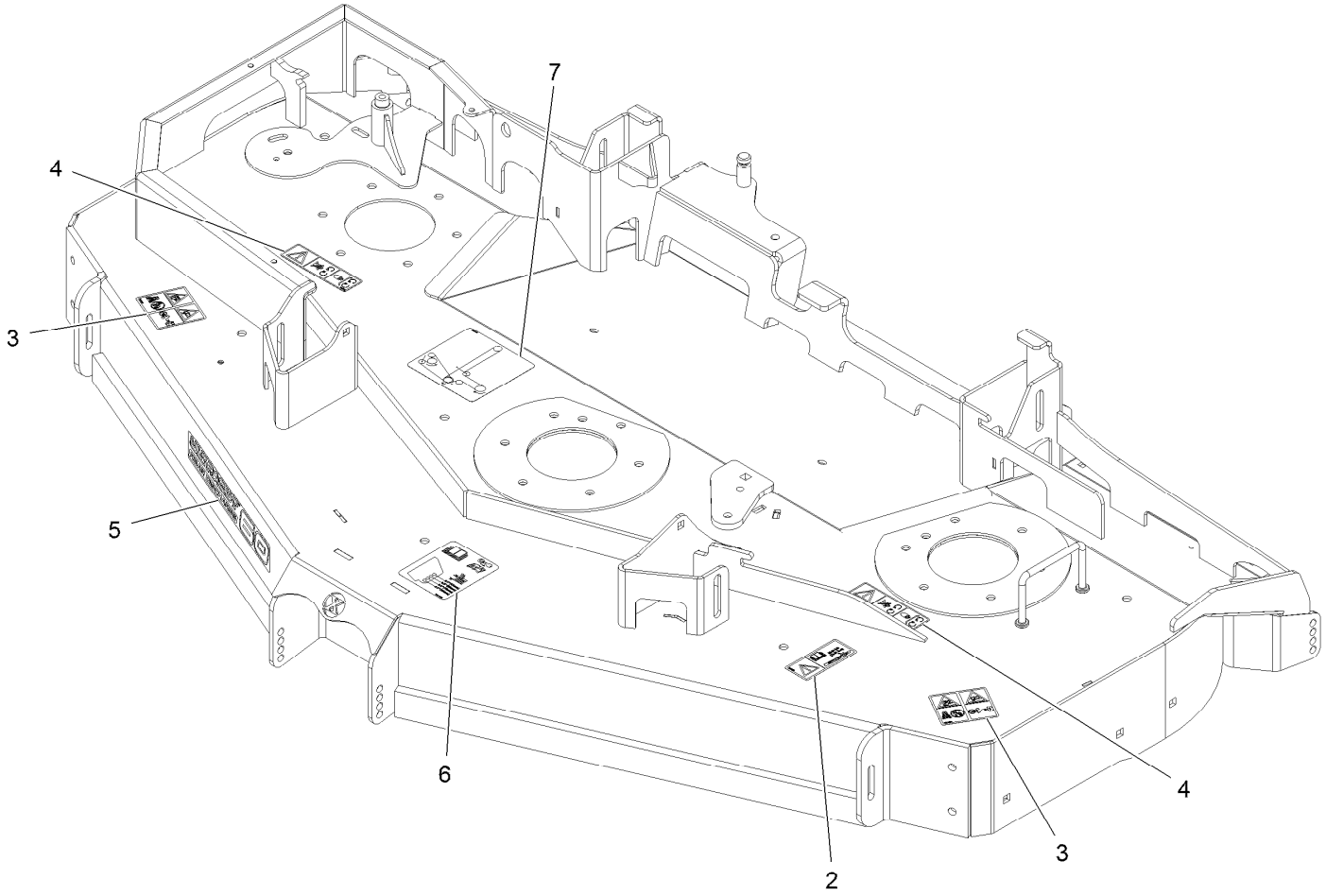

Deck W/Decals Assembly No. 126-1967 (continued)

Ref.	Part Number	Qty.	Description
2	116-8283	1	Decal-Bolt Torque
3	126-6599	2	Decal-Danger Thrown Obj
4	112-9028	2	Decal-Missing, Cover
5	126-6596	1	Decal, 60Rd
6	109-6036	1	Decal-Roller, Anti-Scalp
7	126-0768	1	Decal-Belt Routing Nlz Rd

Idler Assembly No. 126-0853

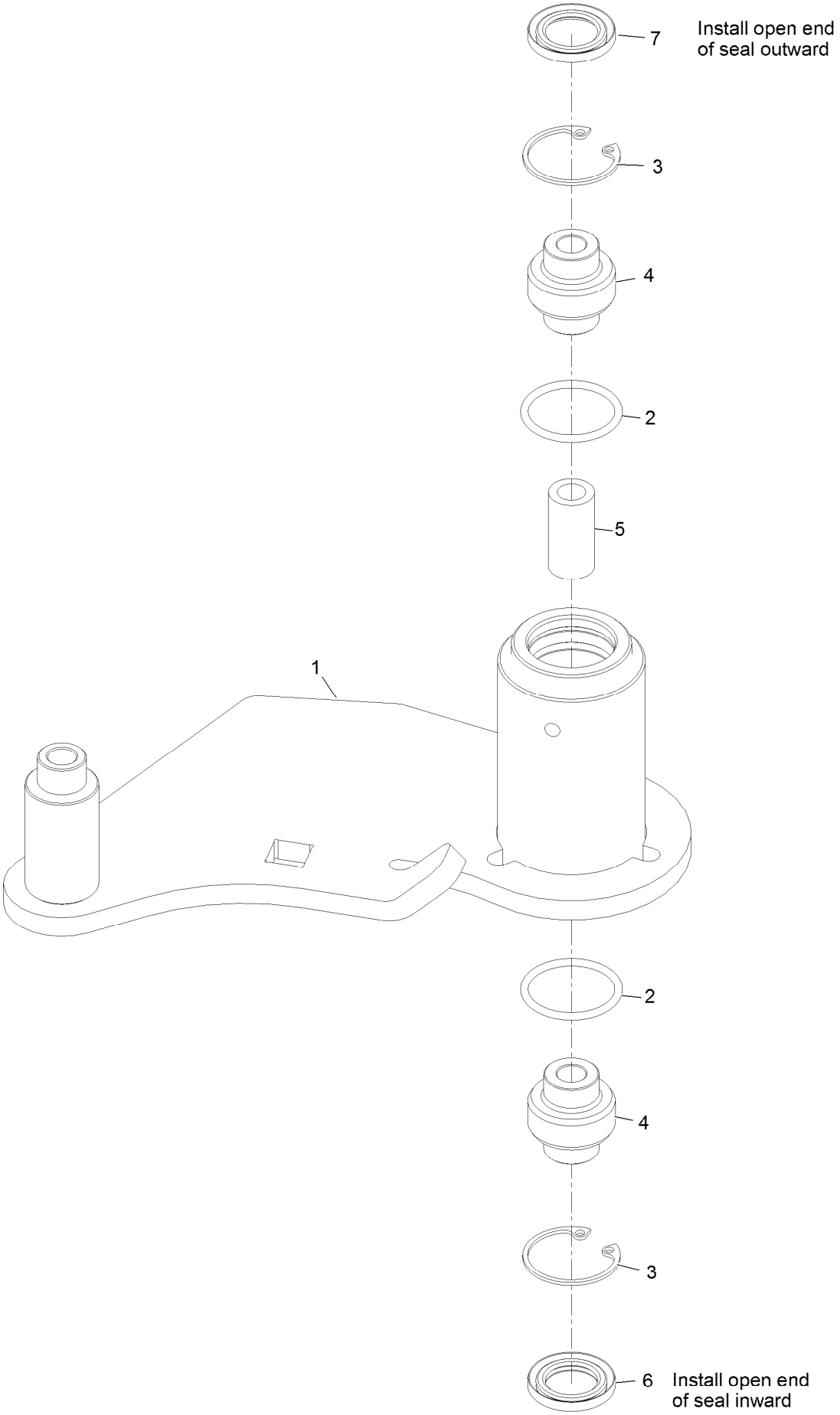

Idler Assembly No. 126-0853 (continued)

Ref.	Part Number	Qty.	Description
1		1	Deck Idler [red] ●
2	106-7159	2	O-Ring
3	32120-10	2	Ring-Retaining
4	103-3504	2	Bearing-Spherical
5	108-6544	1	Spacer
6	103-3505	1	Seal-Double Lip
7	103-3506	1	Seal-Single Lip

● Not serviced separately

Idler Arm W/Bearings Assembly

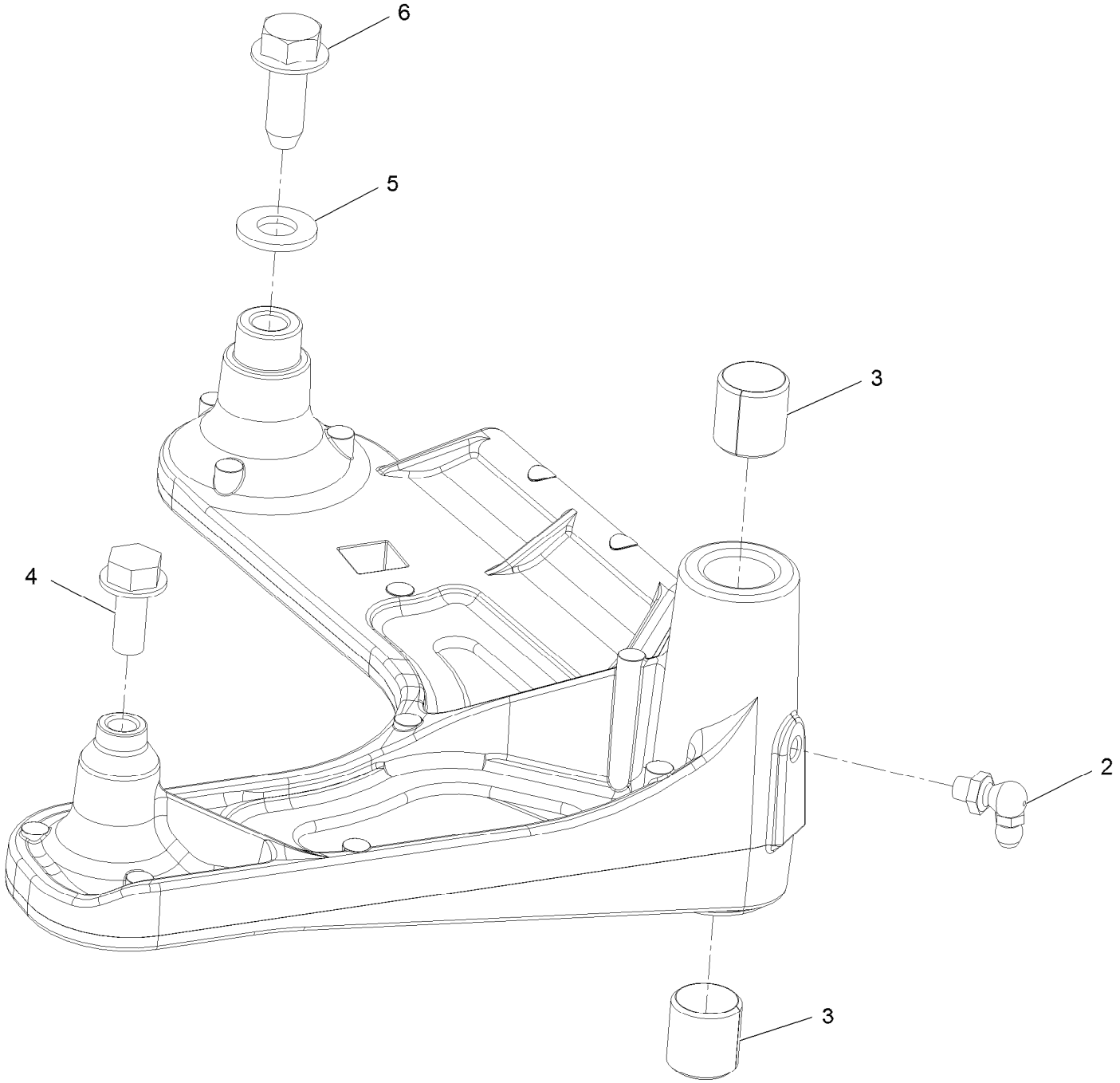

Idler Arm W/Bearings Assembly (continued)

Ref.	Part Number	Qty.	Description
2	302-40	1	Zerk-90° 1/4-28
3	1-513034	2	Sleeve-Bearing
4	32144-11	1	Screw-HWH 5/16-18 X 3/4 Tf
5	3256-24	1	Washer-3/8 Sae
6	126-1696	1	Screw-Thread Forming

Discharge Tunnel Assembly No. 126-1985

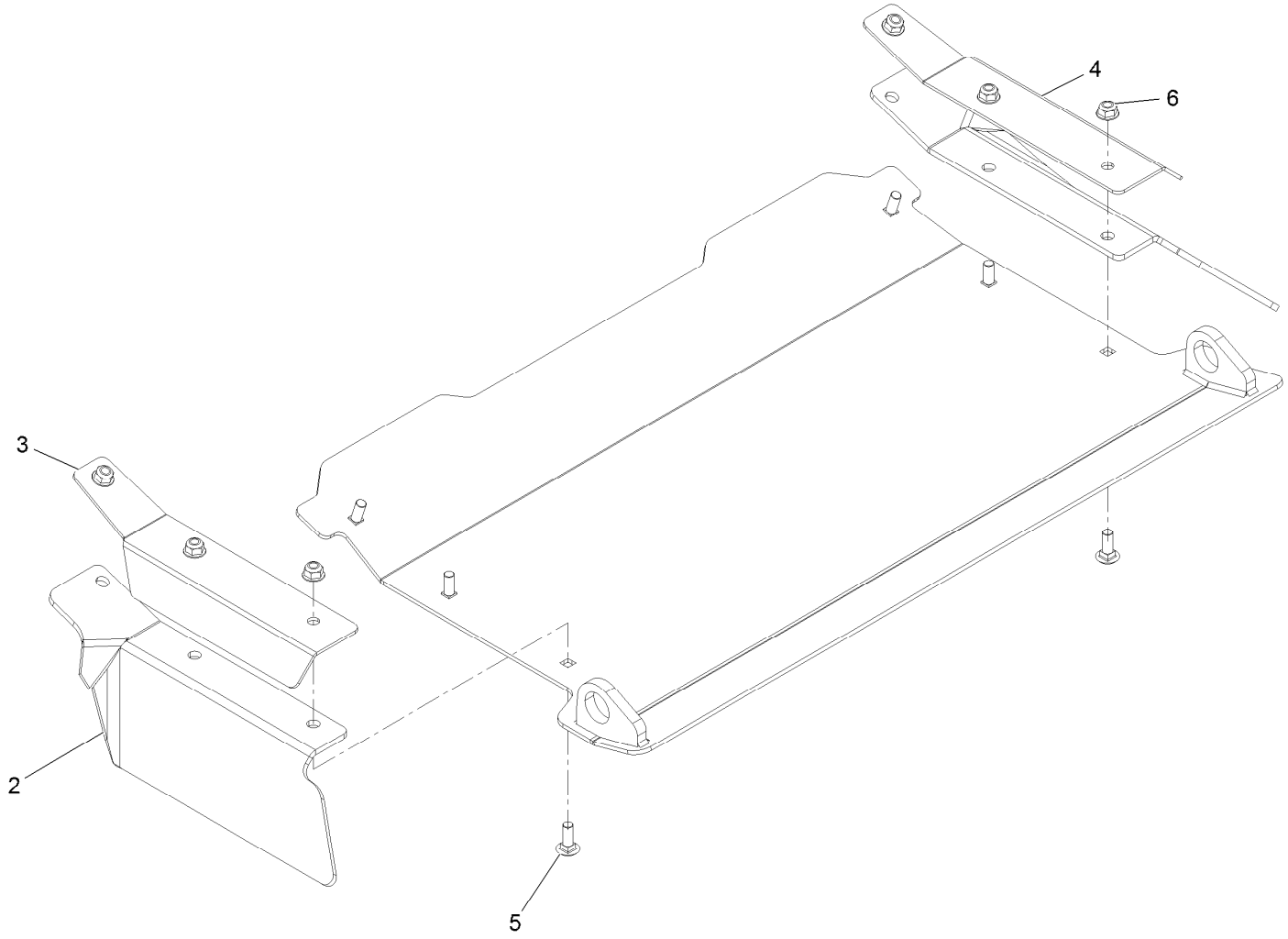

Discharge Tunnel Assembly No. 126-1985 (continued)

Ref.	Part Number	Qty.	Description
2	125-9368	2	Flap-Rubber
3	125-9366-03	1	Bracket-Flap, LH
4	125-9367-03	1	Bracket-Flap, RH
5	3230-16	6	Bolt-Carriage 5/16-18 X 7/8
6	104-8300	6	Nut-Nyloc 5/16-18 Flg

Main Frame Assembly

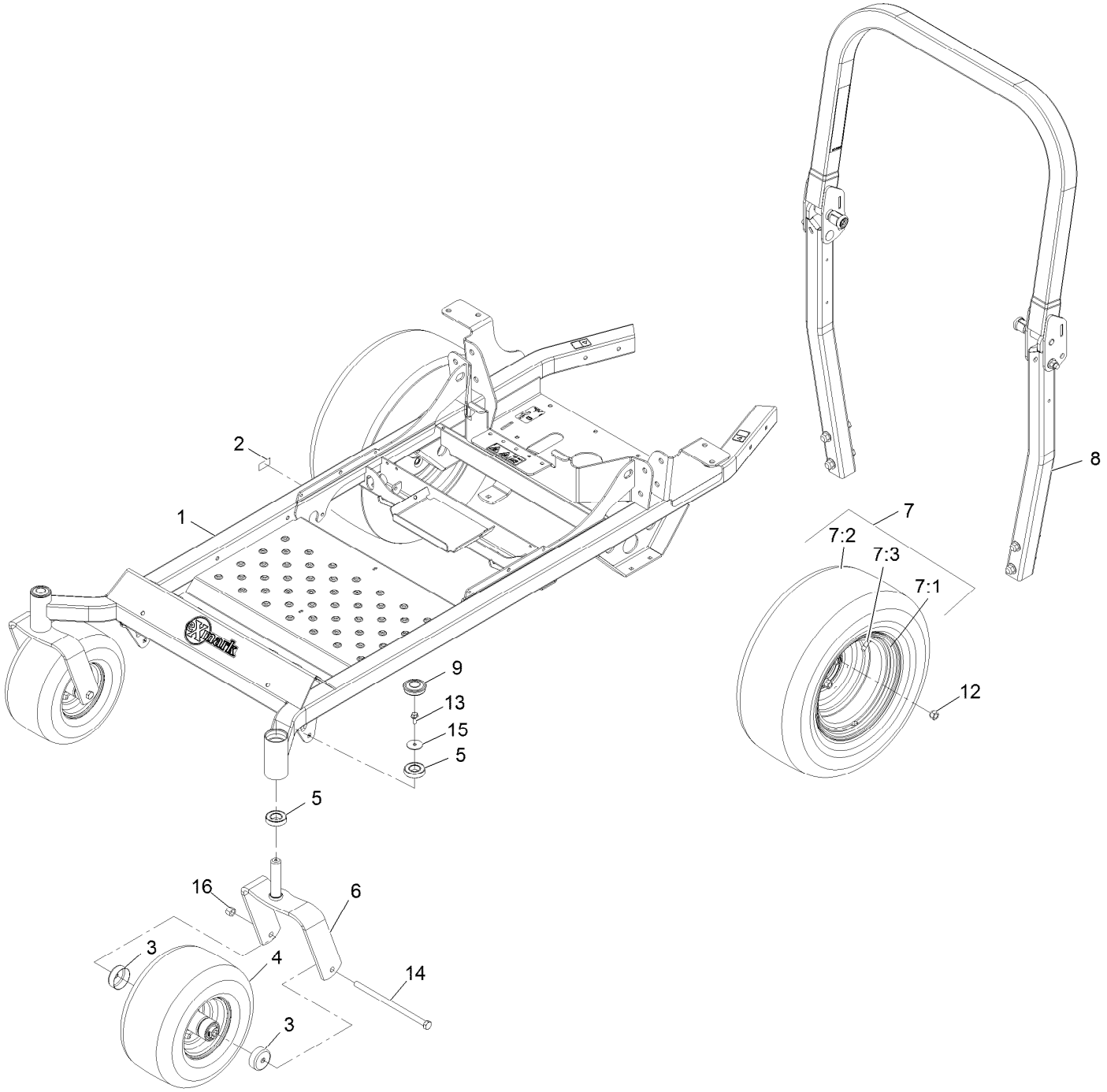

Main Frame Assembly (continued)

Ref.	Part Number	Qty.	Description
1	126-1993	1	Frame-Pioneer 60Rd
2	126-4345	1	Decal-Patent Ttco.Com
3	103-2768	4	Guard-Seal
4	117-0361	2	Caster Wheel ASM
5	109-3678	4	Bearing-Ball
6	126-3997-01	2	Caster Fork Wide [red]
7	119-2685	2	Wheel And Tire ASM
7:1	120-3272	1	Wheel
7:2	120-3269	1	Tire
7:3	232-27	1	Stem-Valve
8	116-3498	1	ASM-ROPS Pioneer
9	116-4348	2	Cap-Grease
12	242-50	8	Nut-Lug 1/2-20
13	3234-5	2	Screw-HH Flg 5/16-18 X 3/4
14	325-39	2	Screw-HH 1/2-13 X 9 1/2
15	3256-68	2	Washer-Flat
16	3296-23	2	Nut-Nyloc 1/2-13

Main Frame W/Decals Assembly No. 126-1993

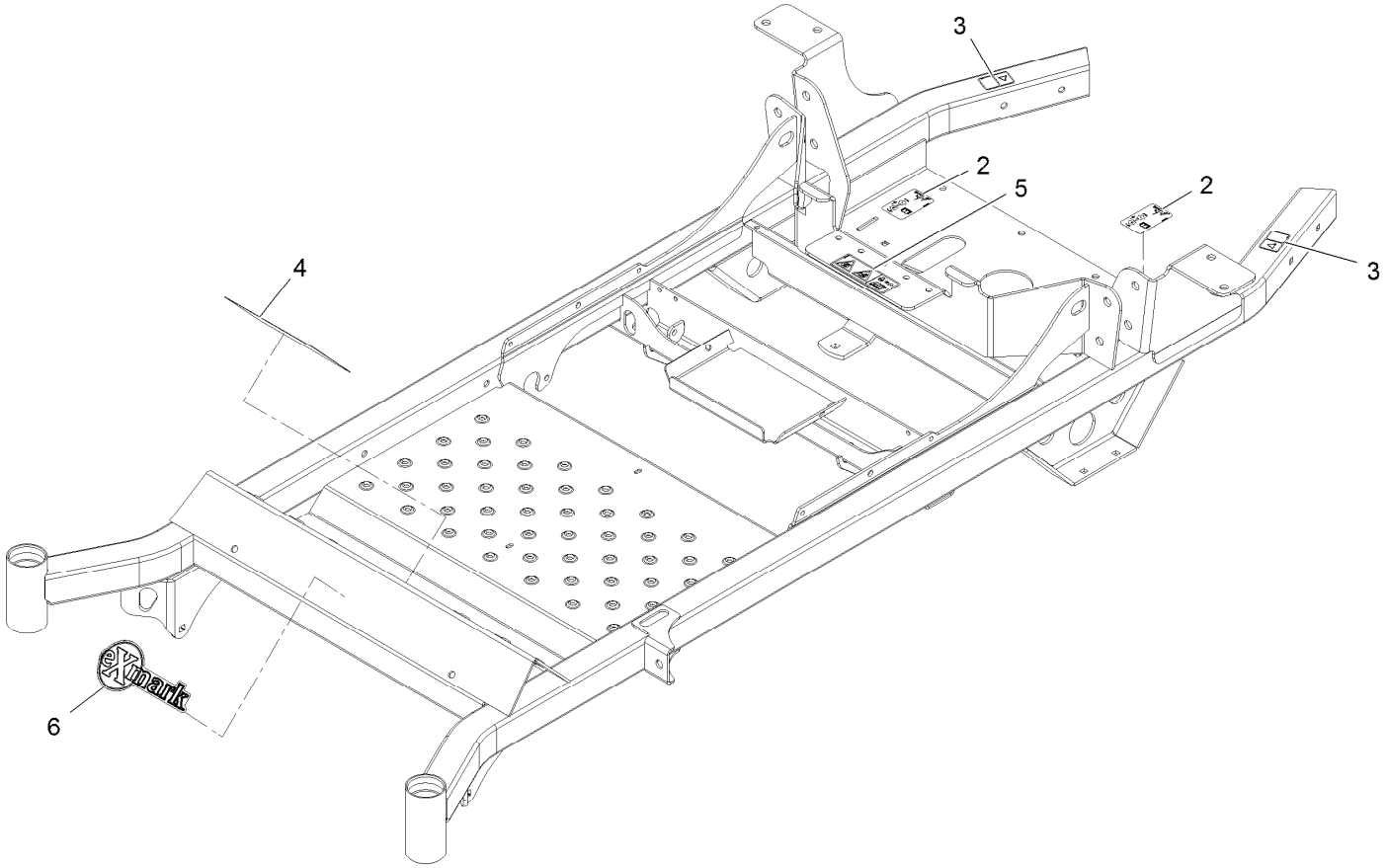

Main Frame W/Decals Assembly No. 126-1993 (continued)

Ref.	Part Number	Qty.	Description
2	116-8588	2	Decal-Drive Release
3	106-5517	2	Decal-Warning, Hot Surface
4	132-0871	1	Decal-Danger
5	126-4363	1	Decal-Warning Rotating Devices
6	126-6598	1	Decal, Exmark Logo

Caster Wheel Assembly No. 117-0361

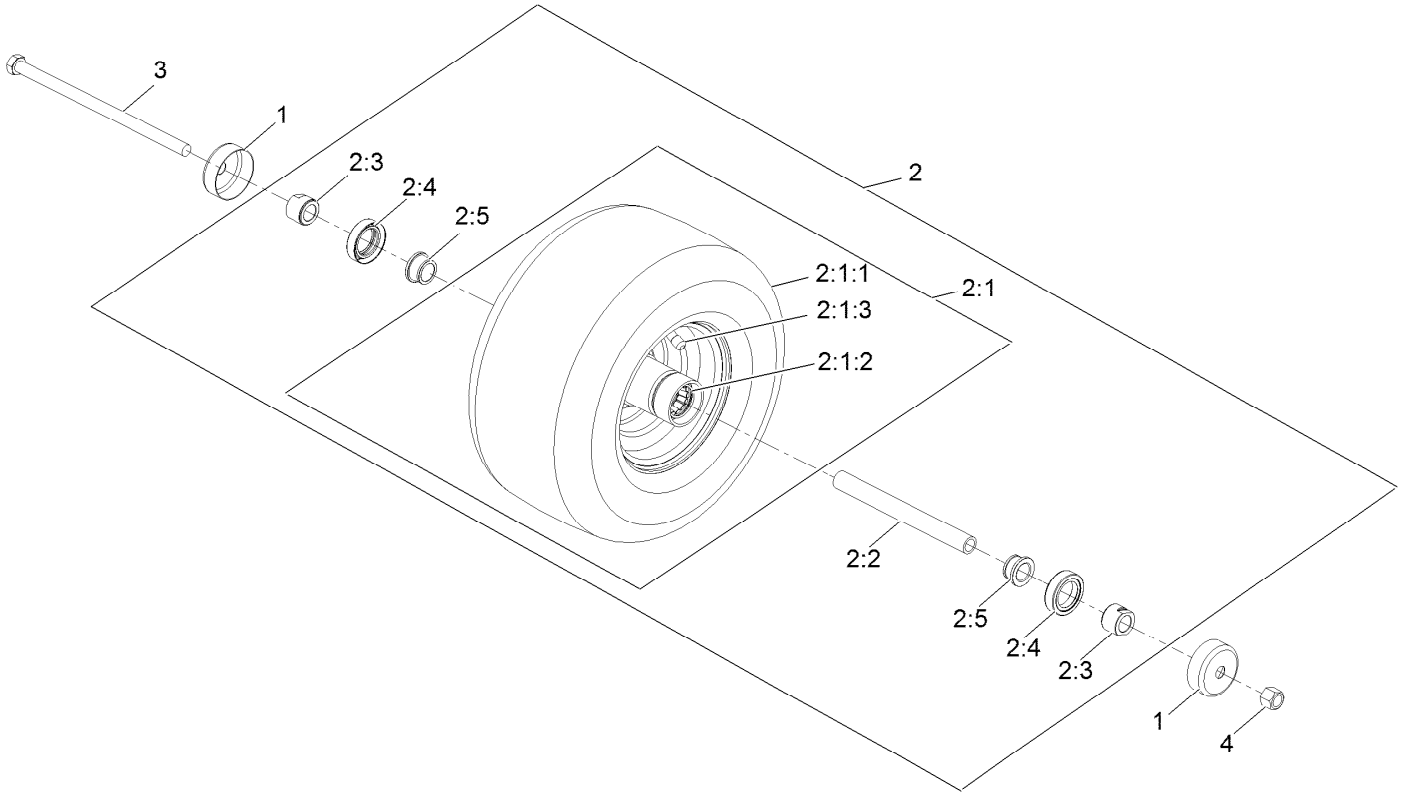

Caster Wheel Assembly No. 117-0361 (continued)

Ref.	Part Number	Qty.	Description
1	103-2768	2	Guard-Seal
2		1	Wheel ASM ●
2:1		1	Wheel And Tire ASM ●
2:1:1	1-523009	1	Tire
2:1:2	1-633584	2	Bearing-Cup
2:1:3	5108	1	Valve
2:2	126-5361	1	Axle ASM-Caster
2:3	103-3051	1	Spacer-Nut
2:4	103-0063	2	Seal-Double Lip
2:5	1-633585	2	Bearing-Cone Tapered Roller
3	325-39	1	Screw-HH 1/2-13 X 9 1/2
4	3296-23	1	Nut-Nyloc 1/2-13

● Not serviced separately

Roll-Over Protection System Assembly No. 116-3498

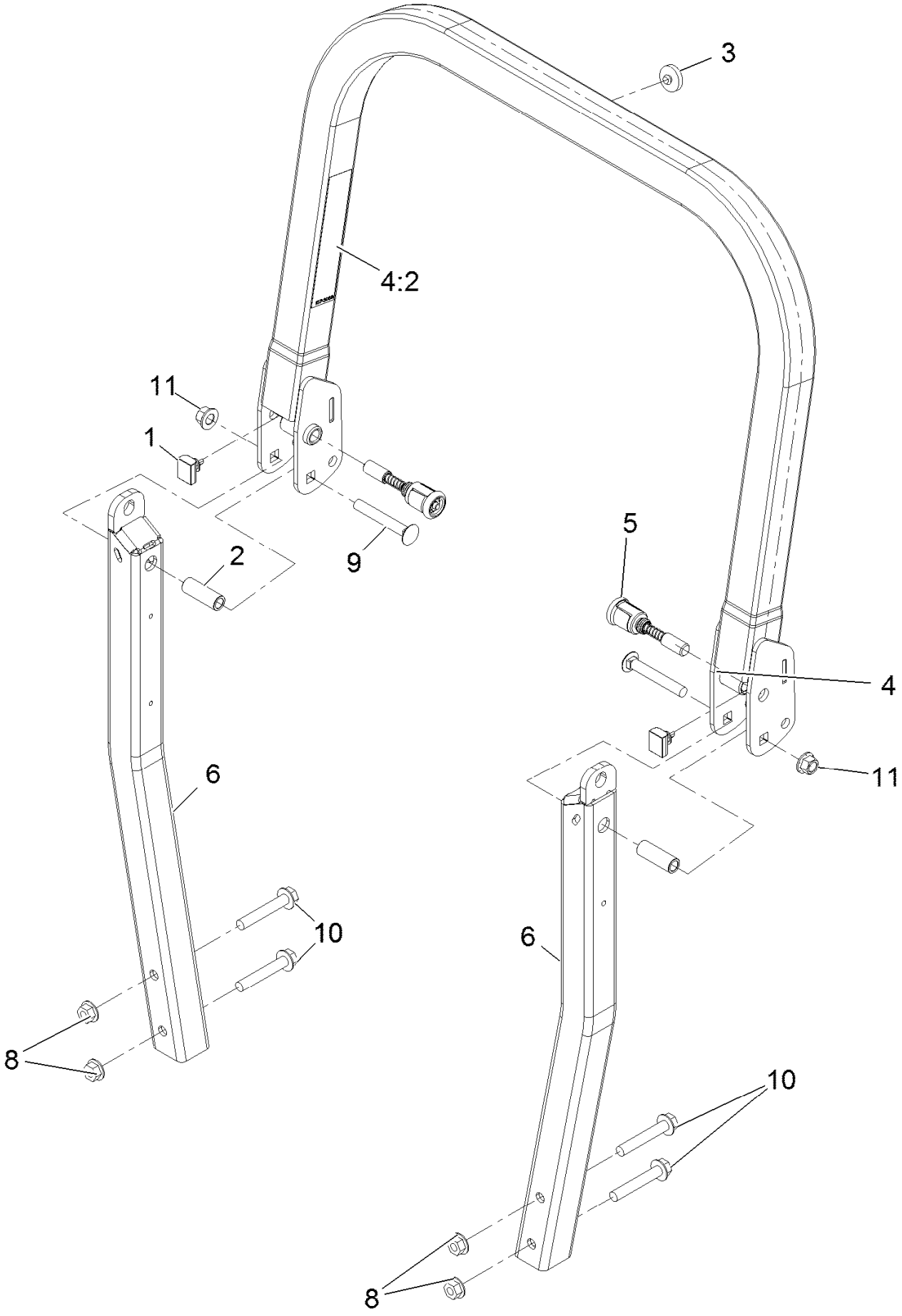

Roll-Over Protection System Assembly No. 116-3498 (continued)

Ref.	Part Number	Qty.	Description
1	109-5337	2	Bumper-ROPS
2	109-6653	2	Spacer
3	109-9233	1	Bumper-Push-In, Rubber
4	116-0019	1	Upper ROPS ASM
4:2	107-3069	1	Decal-Warning, Folding ROPS
5	116-0104	2	Pin-Spring
6		2	ASM-Lwr ROPS Leg ●
8	32128-49	4	Nut-Whizlock 1/2-13
9	3233-10	2	Bolt-Carriage 1/2-13 X 3 1/2
10	3234-40	4	Screw-HF
11	99-5107	2	Nut-Lock 1/2-13

● Not serviced separately

Deck Lift Assembly

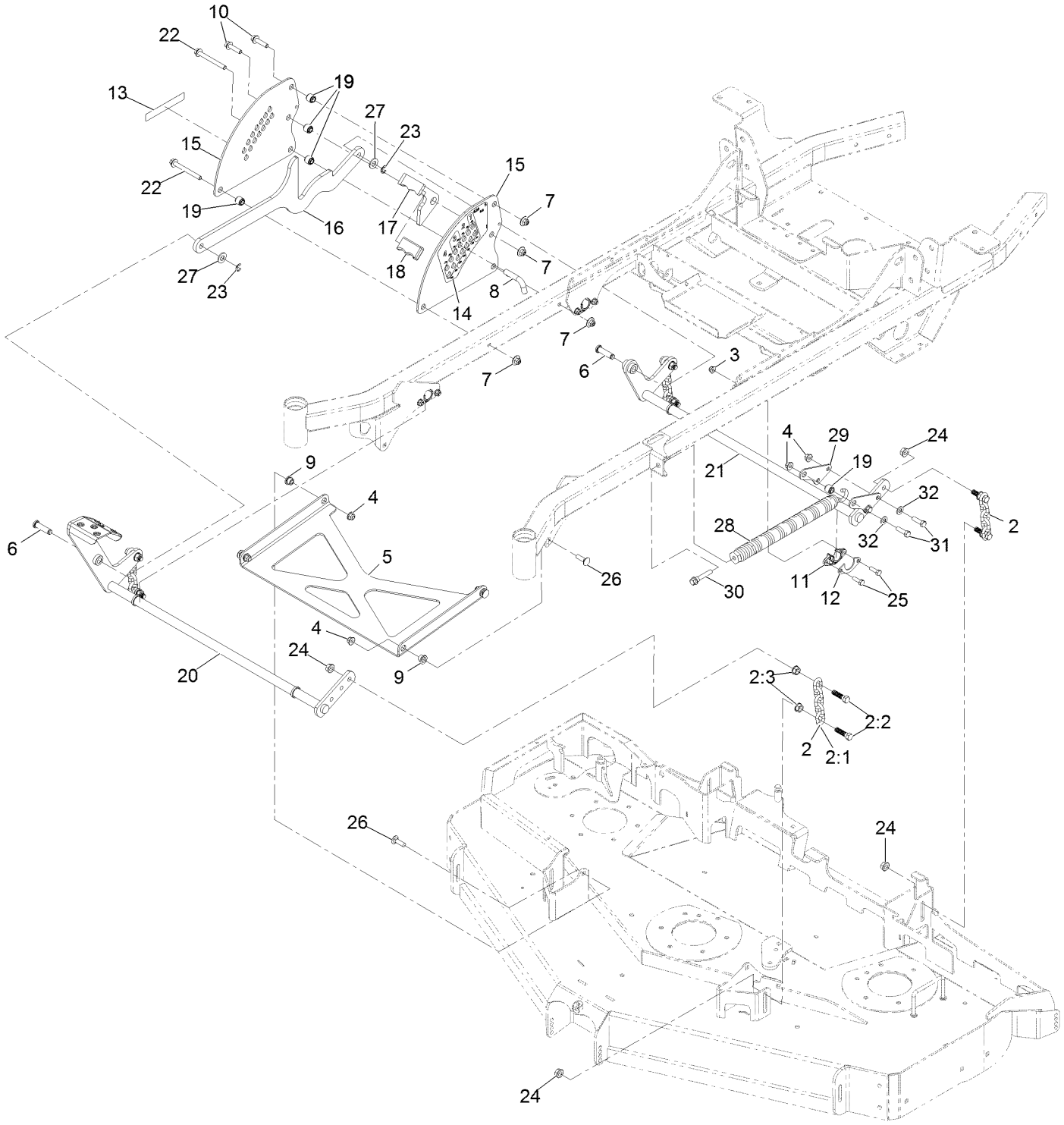

Deck Lift Assembly (continued)

Ref.	Part Number	Qty.	Description
2	103-9817	4	Deck Chain ASM
2:1	1-633447	1	Chain-Lift, Deck
2:2	103-1898	2	Screw-HH 7/16-20 X 1-5/8 Sp
2:3	32128-37	2	Nut-Whizlock 7/16-14
3	104-8300	8	Nut-Nyloc 5/16-18 Flg
4	104-8301	7	Nut-Nyloc 3/8-16 Flg
5	109-3723-01	1	Strut-Deck
6	109-5819	2	Pin-Clevis
7	109-6658	4	Nut-Nyloc 3/8-16 Flg
8	116-5584	1	Pin-HOC
9	109-8788	4	Bushing-Flanged
10	114-4681	2	Screw-HHF
11	115-5065	4	Bushing-Flange
12	116-2887	4	Gusset-Lift, Deck
13	126-6998	1	Decal-S-Series
14	126-4383	1	Decal-Height Of Cut
15	116-4309-03	2	Plate,Deck Lift
16	116-4310-03	1	Link-HOC
17	116-4311	1	Transport Lock-HOC
18	116-4312	1	Grip-Bar, Flat
19	116-4313	5	Spacer-Step, Double
20	116-6011-03	1	Wld-Deck Lift Shaft Frt
21	116-6012-03	1	Wld-Deck Lift Shaft Rr
22	116-4701	2	Screw-HHF
23	32120-47	2	Ring-Retaining
24	32128-37	8	Nut-Whizlock 7/16-14
25	322-5	8	Screw-HH 5/16-18 X 1
26	3231-25	4	Bolt-Carriage 3/8-16 X 1 1/4
27	3256-26	2	Washer-1/2 Sae
28	116-0886	1	Extension Spring ASM
29	116-6715-03	2	Bracket-Spring Anchor Rear
30	92-7674	1	Screw-Shcs 3/8-16 X 2.212
31	323-7	3	Screw-HH 3/8-16 X 1 1/4
32	3256-24	3	Washer-3/8 Sae

Seat Assembly

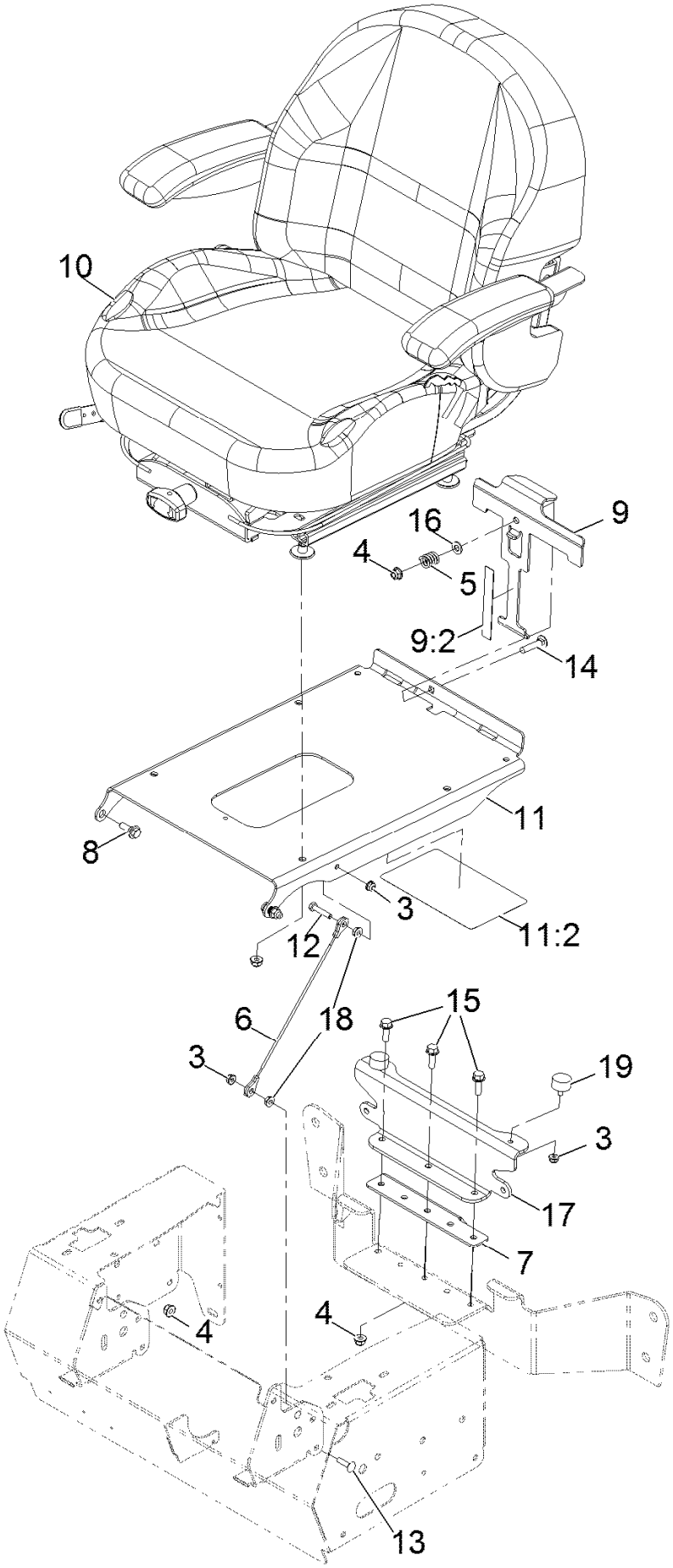

Seat Assembly (continued)

Ref.	Part Number	Qty.	Description
3	104-7201	4	Nut-Nyloc 1/4-20 Flg
4	104-8300	10	Nut-Nyloc 5/16-18 Flg
5	107-3017	1	Spring-Compression
6	109-2628	1	Cable-Stop, Seat
7	116-0871	1	Catch,Seat Latch
8	116-1297	2	Screw-Shoulder
9	116-3121	1	ASM-Seat Latch
9:2	116-3120	1	Strip-Poly Wear
10	126-2802	1	Kit-Seat Suspension
11	116-4418	1	Plate, Seat W/Decals
11:2	109-6016	1	Decal-Service Aid
12	321-8	1	Screw-HH 1/4-20 X 1 1/4
13	3229-2	1	Bolt-Carriage 1/4-20 X 1
14	3230-4	1	Bolt-Carriage 5/16-18 X 1 1/2
15	3234-29	3	Screw-HH Flg 5/16-18 X 1
16	3256-23	1	Washer-5/16 Sae
17	126-0480-01	1	Plate-Seat Support
18	32128-33	2	Nut-Whizlock 1/4-20
19	240-14	2	Bumper-Rubber

Seat W/Tracks Assembly No. 126-2802

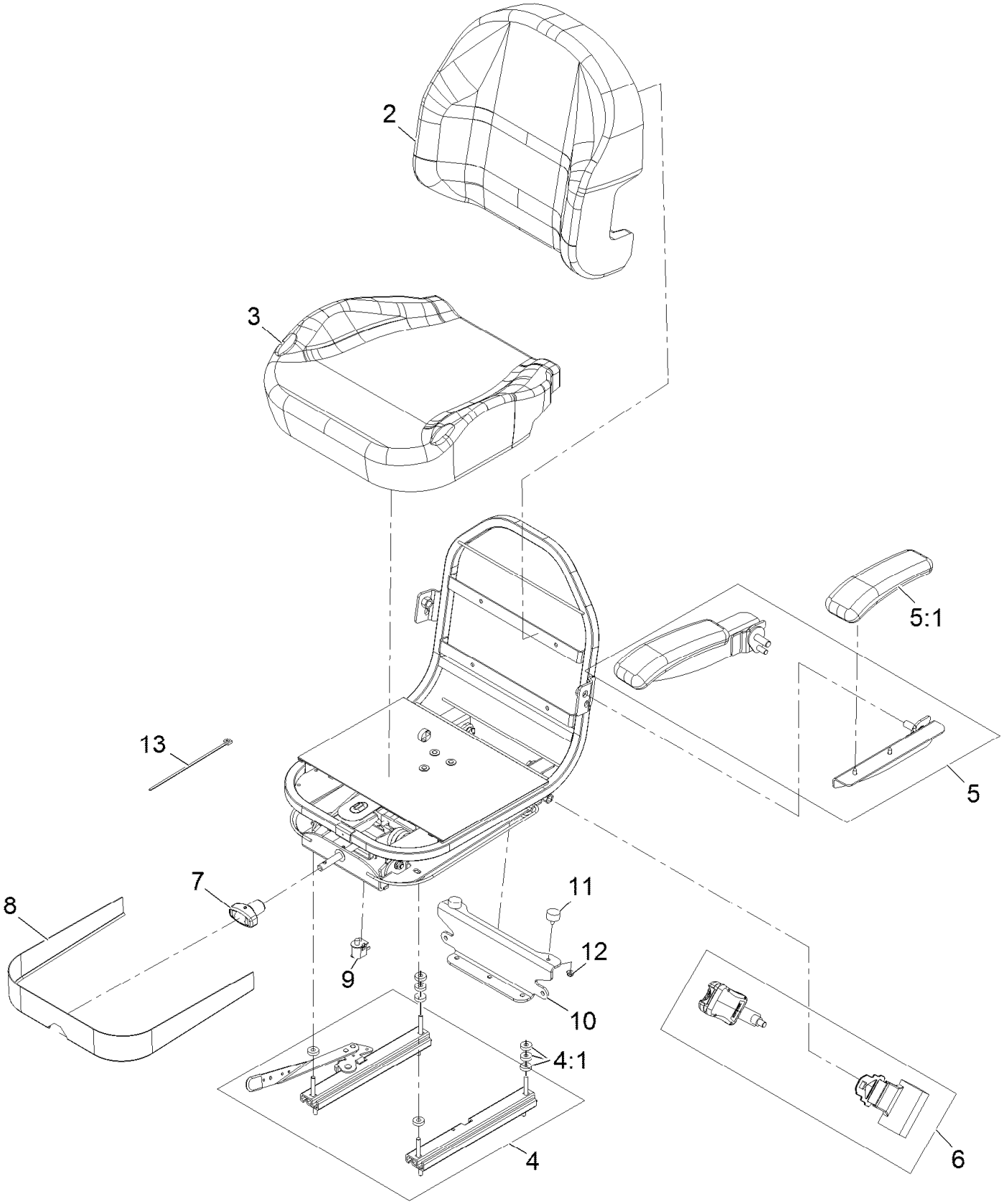

Seat W/Tracks Assembly No. 126-2802 (continued)

Ref.	Part Number	Qty.	Description
2	126-3505	1	Cover-Seat Back
3	130-0848	1	Cover-Cushion
4	126-3501	1	Kit-Track-Seat 4"
4:1	26-4840	8	Spacer-Pin, Mounting
5	126-2058	1	Armrest Kit
5:1	110-4163	2	Cushion-Rest, Arm
6	126-3504	1	Kit-Seat Belt Service

Ref.	Part Number	Qty.	Description
7	130-0846	1	Knob-Adjuster
8	126-3506	1	Cover-Skirt W/Fasteners
9	82-2190	1	Switch
10	126-0480-01	1	Plate-Seat Support
11	240-14	2	Bumper-Rubber
12	104-7201	2	Nut-Nyloc 1/4-20 Flg
13	1-303335	1	Tie-Cable 7 15/16 (Large)

Controls Assembly

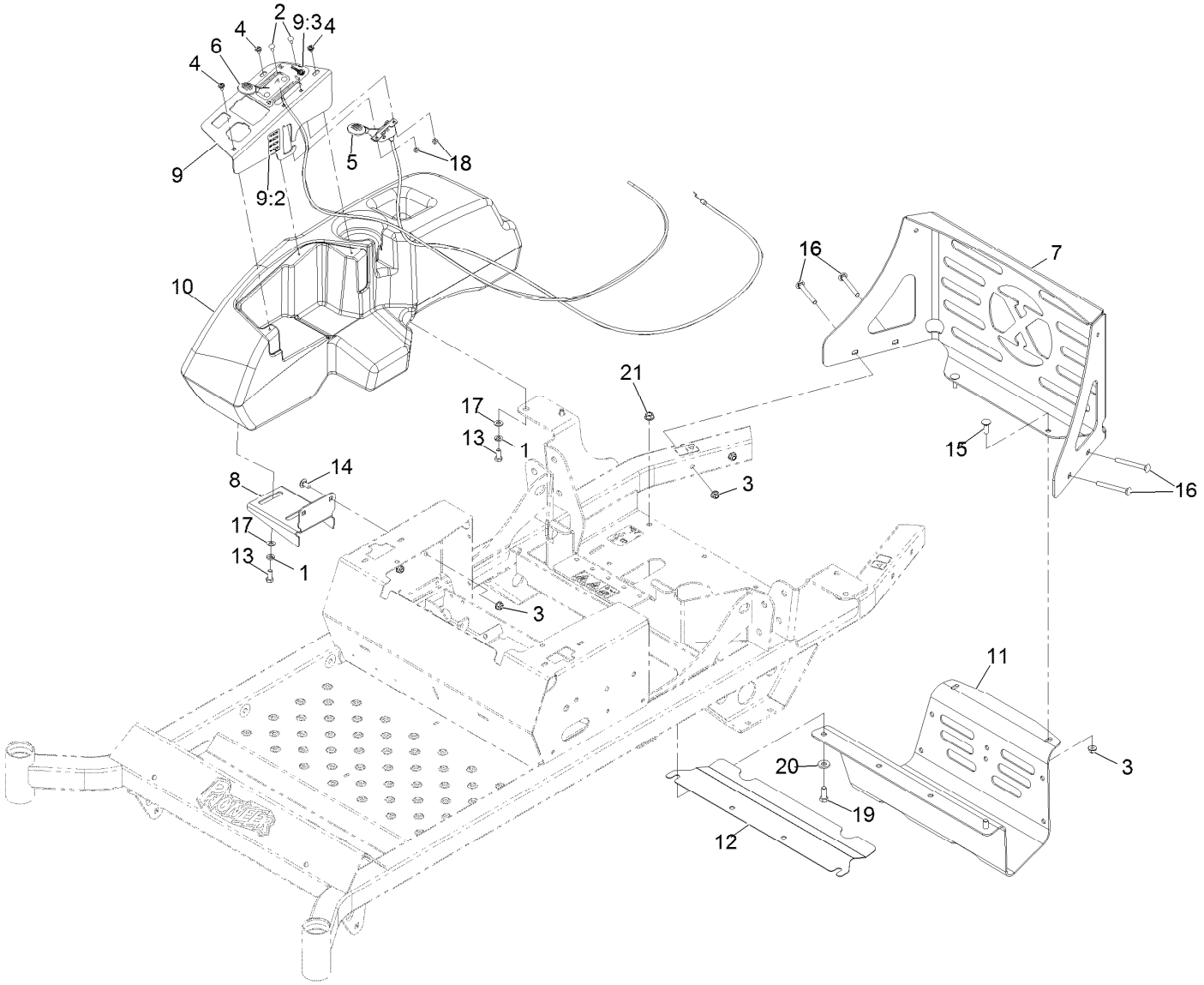

Controls Assembly (continued)

Ref.	Part Number	Qty.	Description
1	1-805005	4	Washer-Lock 5/16 Heavy
2	1-807513	4	Bolt-Carriage #10-24 X 1/2
3	104-8300	8	Nut-Nyloc 5/16-18 Flg
4	109-2661	3	Screw-PPH #10-24 X 1/2
5	126-2800	1	Control-Throttle
6	109-9147	1	Control-Choke
7	116-3453-03	1	Panel,Rear Guard
8	116-3495-03	1	Bracket-Tank And Fender
9	116-9051	1	ASM, Control Panel W/ Decal
9:2	116-1496	1	Decal,Fuse Block
9:3	116-4465	1	Decal-Throttle Choke
10	116-4138	1	Console,RH
11	126-3827-03	1	Guard, Muffler
12	126-0456-03	1	Shield, Heat
13	322-3	4	Screw-HH 5/16-18 X 3/4
14	3230-18	2	Bolt-Carriage 5/16-18 X 5/8
15	3230-2	2	Bolt-Carriage 5/16-18 X 1
16	3230-9	4	Bolt-Carriage 5/16-18 X 2 3/4
17	3256-23	4	Washer-5/16 Sae
18	3296-2	4	Nut-Nyloc #10-24
19	323-6	2	Screw-HH 3/8-16 X 1
20	98-5975	2	Washer-Spring Disc 3/8
21	3290-357	2	Nut-Whizlock 3/8-16

Motion Control Assembly

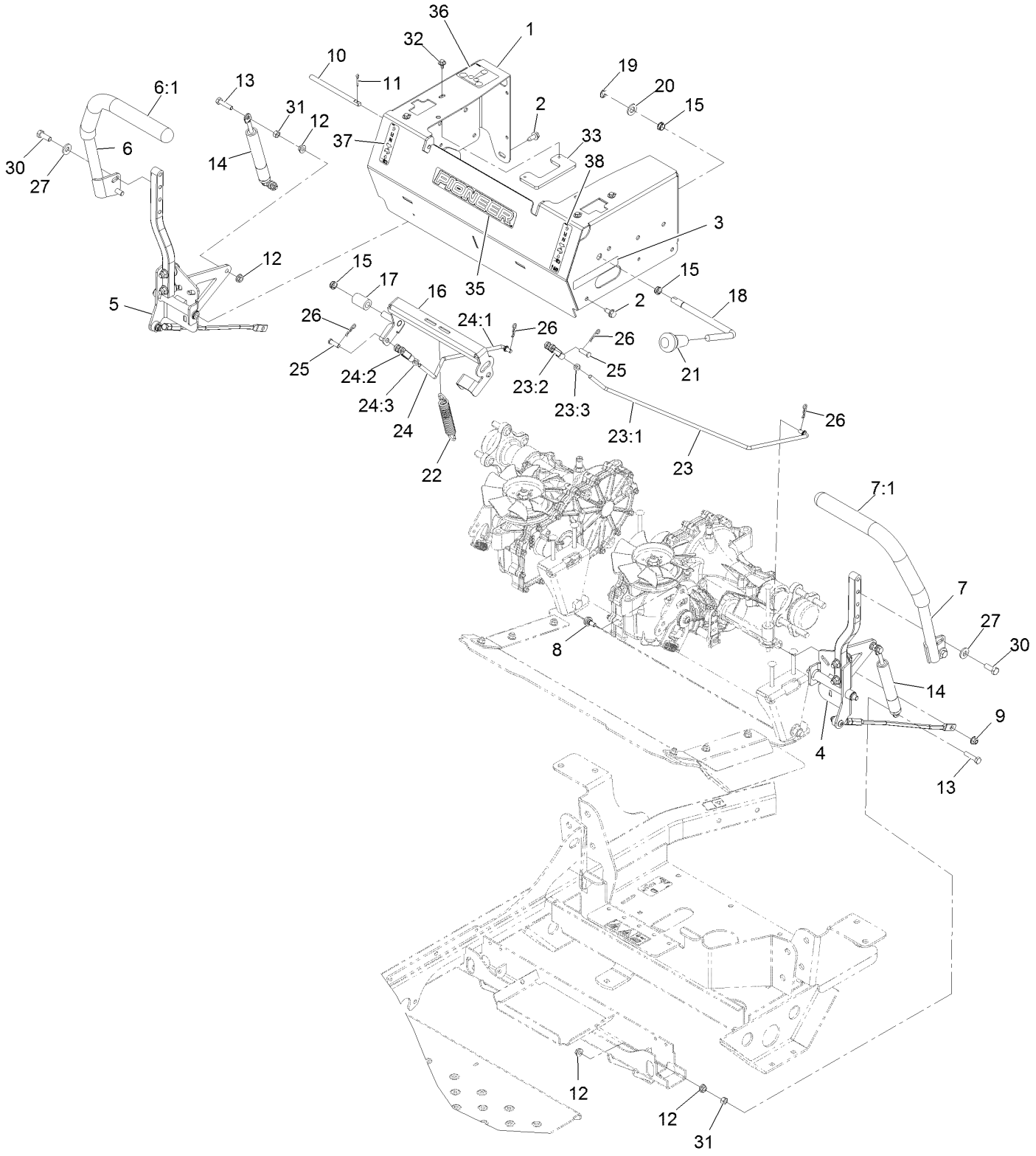

Motion Control Assembly (continued)

Ref.	Part Number	Qty.	Description
1	116-3188	1	ASM-Mot Ctrl Frm W/Dcl
2	32144-70	6	Screw-HWH 5/16-18 X 3/4 Tf
3	126-6998	1	Decal-S-Series
4		1	Motion Control ASM-LH ●
5		1	Motion Control ASM-RH ●
6	119-3486	1	RH Handle ASM
6:1	108-6187	1	Grip
7	119-3485	1	LH Handle ASM
7:1	108-6187	1	Grip
8	37-8771	2	Screw-Shoulder 5/16-18 X 5/8
9	104-8300	2	Nut-Nyloc 5/16-18 Flg
10	109-3705	2	Pin-Control Pivot
11	3272-10	2	Pin-Cotter 1/8 X 3/4
12	32128-20	8	Nut-Whizlock 5/16-18
13	1-403180	4	Screw-HH 5/16-18 X 1 3/8 Special
14	109-5957	2	Damper-Motion Control
15	116-1393	3	Bushing,Snap
16	116-6233	1	Wld-Brake Center Arm
17	109-5010	1	Spacer
18	116-3155	1	Handle,Brake
19	32120-47	1	Ring-Retaining
20	106-9888	1	Washer-Flat
21	106-7952	1	Knob
22	88-6130	1	Spring-Deck, Engagement
23	116-1165	1	Brake Linkage ASM-LH
23:1	116-1167	1	Linkage,Brake LH
23:2	1-303105	1	Yoke-Adjustable
23:3	3220-2	1	Nut-Jam 5/16-24
24	116-1166	1	Brake Linkage ASM-RH
24:1	116-1168	1	Linkage-Brake, RH
24:2	1-303105	1	Yoke-Adjustable
24:3	3220-2	1	Nut-Jam 5/16-24
25	1-808280	2	Pin-Clevis 5/16 X 1 49/64
26	1-806003	4	Hairpin-Cotter
27	98-5975	4	Washer-Spring Disc 3/8
30	323-6	4	Screw-HH 3/8-16 X 1
31	3217-6	4	Nut-Hex 5/16-18
32	46-8560	4	Screw-HHF 1/4-20 X 1/2
33	109-6214	2	Stop-Motion Control
35	126-6754	1	Decal-Pioneer Logo
36	109-6014	1	Decal-Belt Routing
37	99-8936	1	Decal-Control, Motion
38	126-6753	1	Decal-Motion Control,Parkbrake

● Not serviced separately

LH Motion Control Assembly

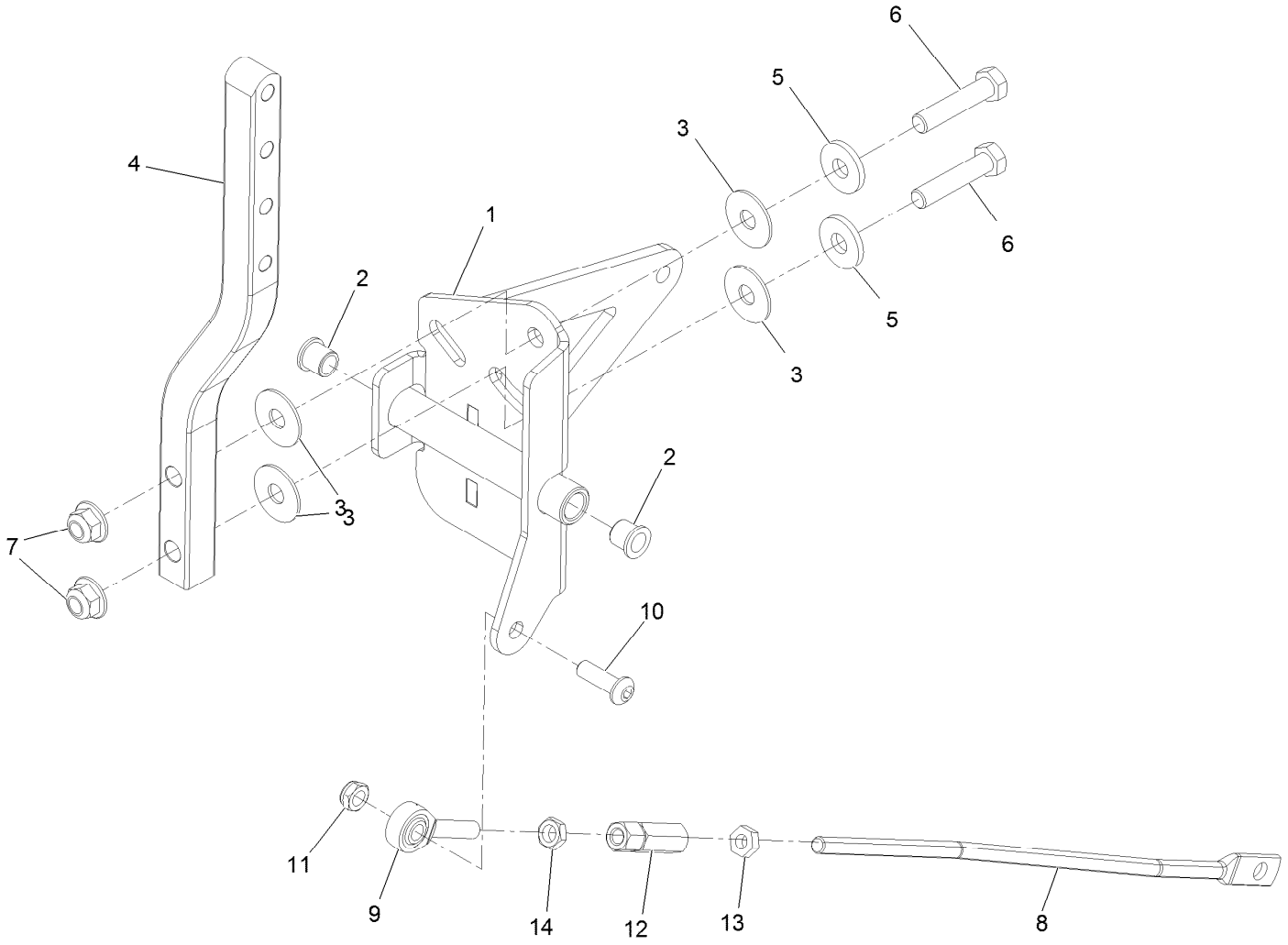

LH Motion Control Assembly (continued)

Ref.	Part Number	Qty.	Description
1	126-3710	1	LH Control Pivot ASM
2	103-9928	2	Bearing
3	52-2900	4	Washer-Plastic
4	116-3183	1	Arm-Motion Control
5	5-0838	2	Washer
6	323-9	2	Screw-HH
7	104-8301	2	Nut-Flange, NI
8	116-2543	1	Link,Motion Control
9	2411-53	1	Bearing-Rod End, LH
10	3274-104	1	Screw-HSBH
11	3296-47	1	Nut-Lock, NI
12	109-3728	1	Nut-Rod Adjustment
13	3220-2	1	Nut-Jam
14	3220-20	1	Nut-Jam

RH Motion Control Assembly

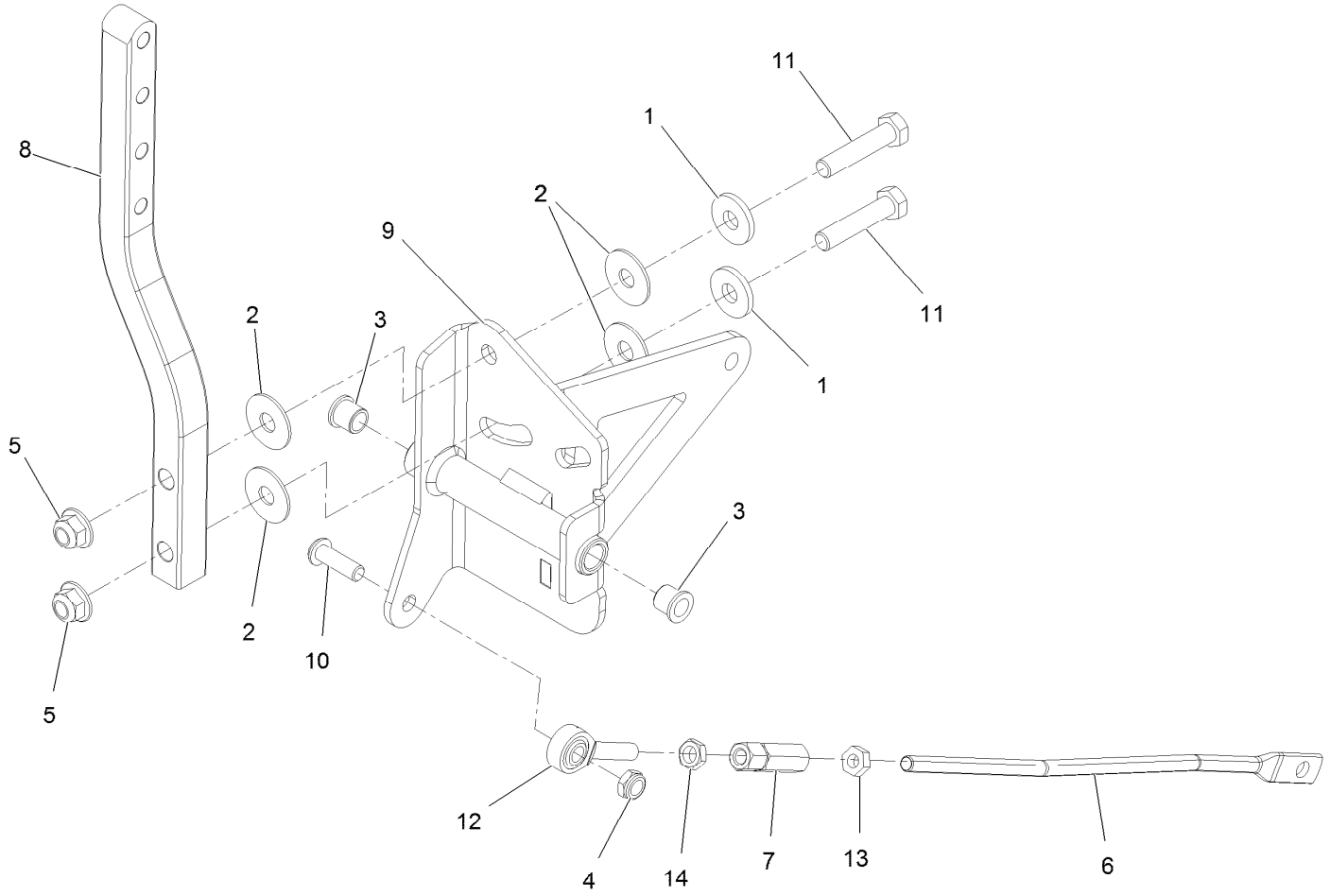

RH Motion Control Assembly (continued)

Ref.	Part Number	Qty.	Description
1	5-0838	2	Washer
2	52-2900	4	Washer-Plastic
3	103-9928	2	Bearing
4	3296-47	1	Nut-Nyloc 5/16-18 Thin
5	104-8301	2	Nut-Nyloc 3/8-16 Flg
6	116-2543	1	Link,Motion Control
7	109-3728	1	Nut-Rod Adjustment
8	116-3183	1	Arm-Motion Control
9	126-3707	1	RH Control Pivot ASM
10	3274-104	1	Screw-Button Head 5/16-18 X 1
11	323-9	2	Screw-HH 3/8-16 X 1 3/4
12	2411-53	1	Balljoint LH
13	3220-2	1	Nut-Jam 5/16-24
14	3220-20	1	Nut-Jam 5/16-24 LH

Fuel Tank Mounting Assembly

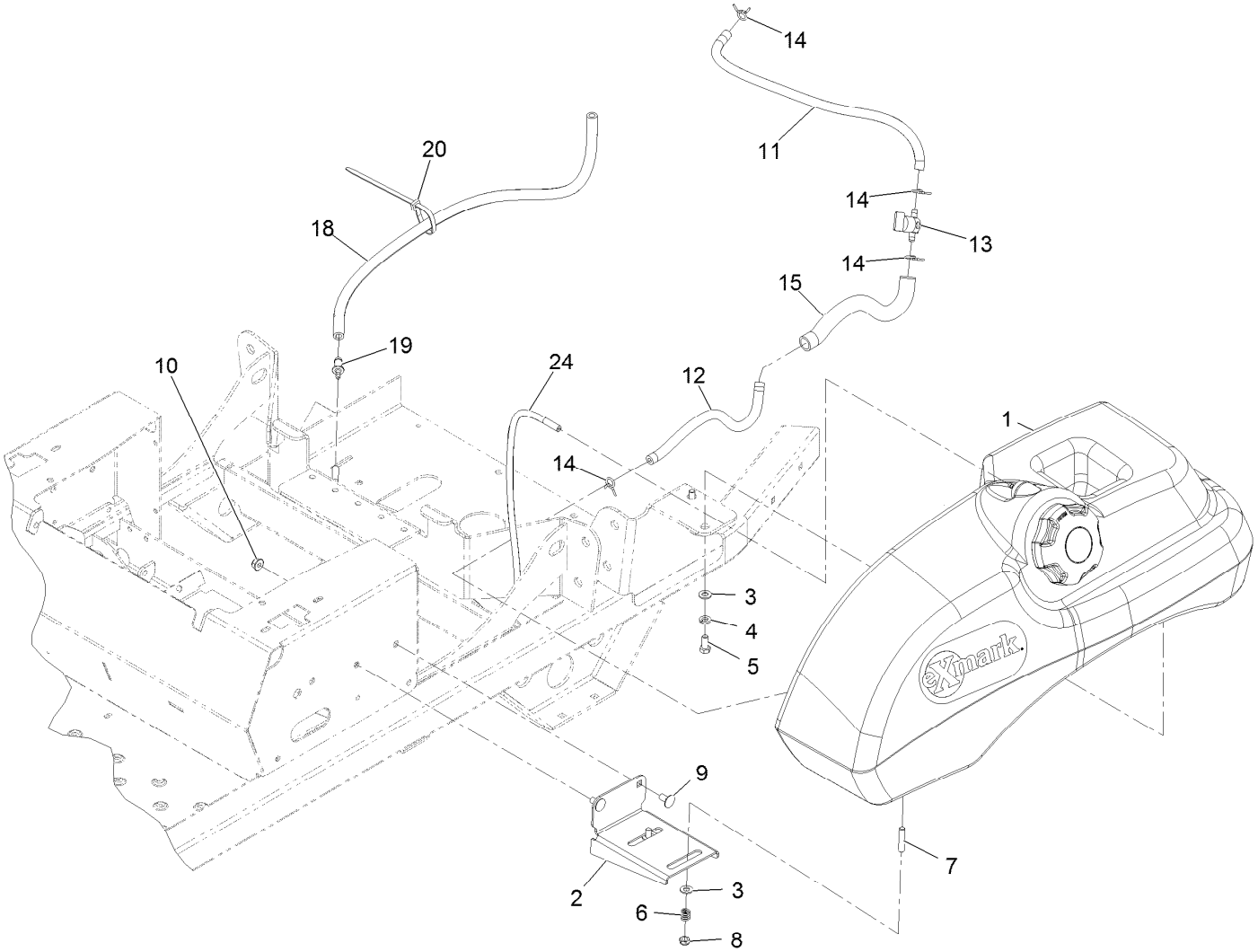

Fuel Tank Mounting Assembly (continued)

Ref.	Part Number	Qty.	Description
1	116-4610	1	ASM-Fuel Tank
2	116-3495-03	1	Bracket-Tank And Fender
3	3256-23	4	Washer-5/16 Sae
4	1-805005	2	Washer-Lock 5/16 Heavy
5	322-3	2	Screw-HH 5/16-18 X 3/4
6	1-633349	2	Spring-Compression
7	1-633023	2	Stud-Fuel Tank ●
8	3296-47	2	Nut-Nyloc 5/16-18 Thin
9	3230-18	2	Bolt-Carriage 5/16-18 X 5/8
10	104-8300	2	Nut-Nyloc 5/16-18 Flg
11	110-5706	1	Hose-Fuel
12	109-0282	1	Hose-Fuel
13	1-603770	1	Valve-Fuel
14	1-303077	4	Clamp-Fuel Line
15	116-4515	1	Conduit-Fuel Line
18	114-0832	1	Hose-Fuel
19	116-4630	1	Fitting-Straight Orifice
20	1-303335	1	Tie-Plastic
24	116-4802	1	Hose,Emissions

● Use Pro-Lock, Nut Type (P/N 1-840022, .5ml tube) on threads.

Fuel Tank Assembly No. 116-4610

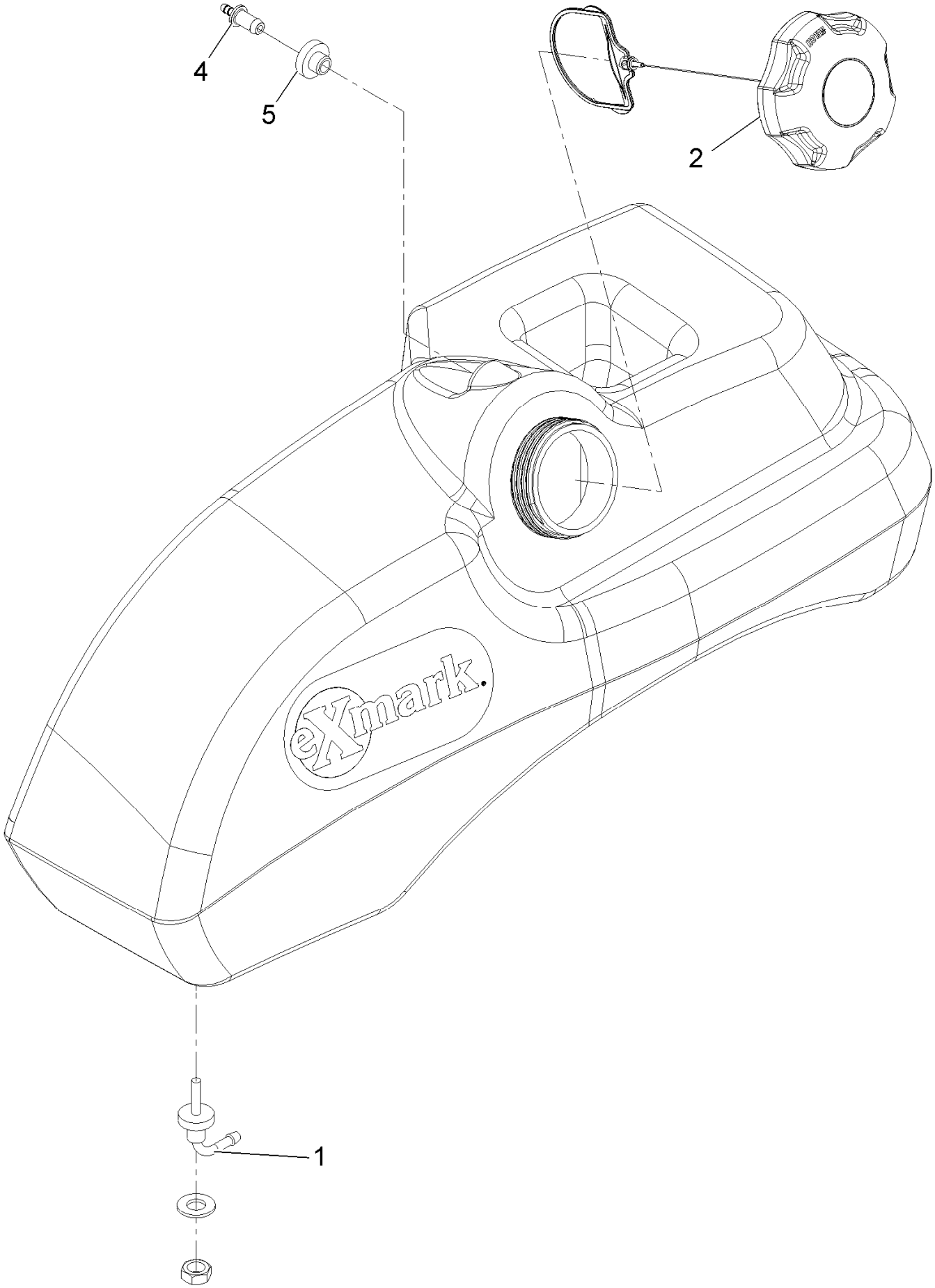

Fuel Tank Assembly No. 116-4610 (continued)

Ref.	Part Number	Qty.	Description
1	103-2605	1	Fitting-Fuel Bulkhead W/Strainer ●
2	120-5461	1	Cap-Fuel, Ratcheting
4	116-4630	1	Fitting-Straight Orifice
5	46-6560	1	Bushing

● Use Pro-Lock, Nut Type (P/N 1-840022, .5ml tube) on threads.

Engine Assembly

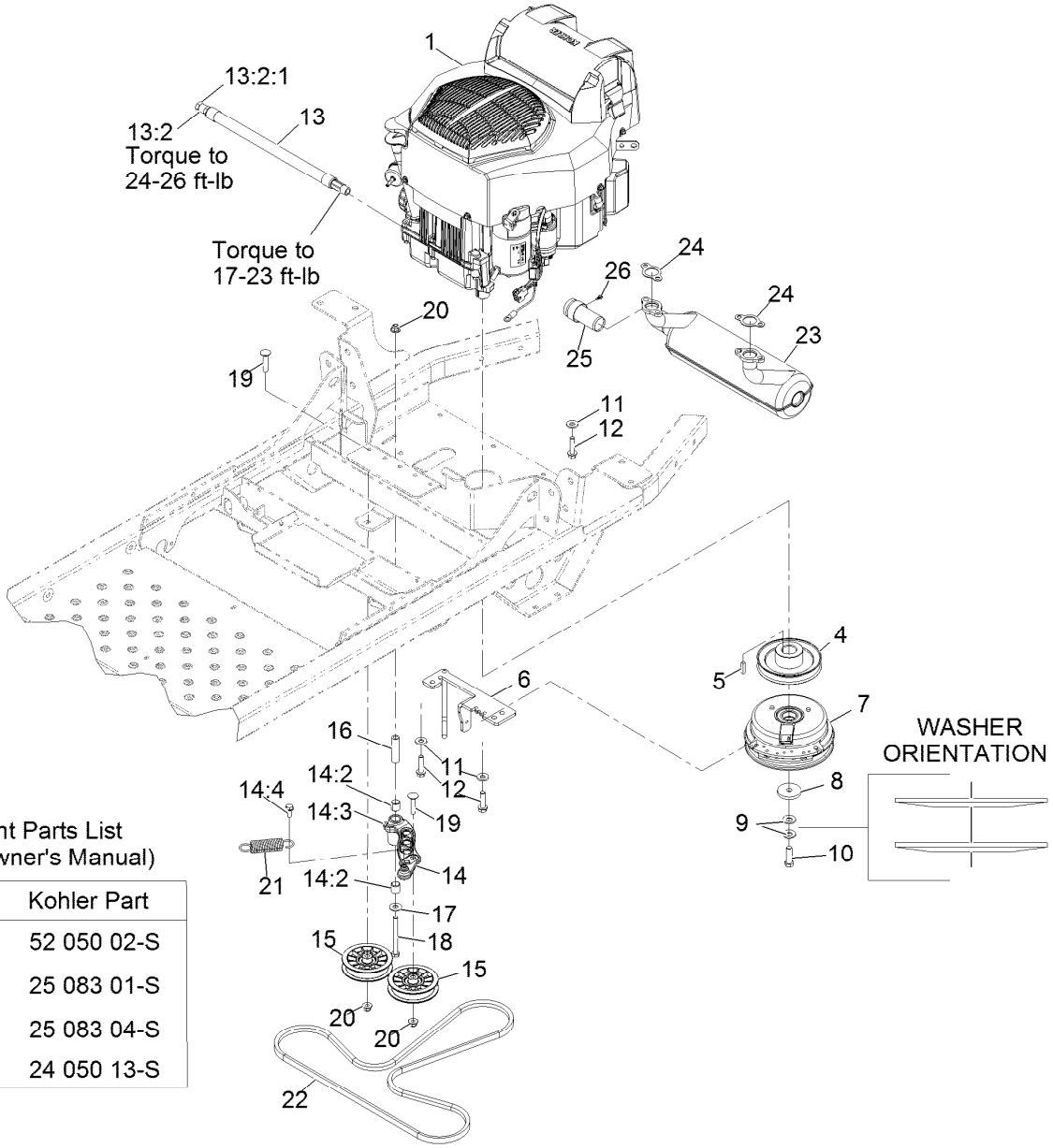

Kohler Replacement Parts List
(Refer To Engine Owner's Manual)

Description	Kohler Part
Engine Oil Filter	52 050 02-S
Engine Air Filter	25 083 01-S
Safety Filter	25 083 04-S
Fuel Filter	24 050 13-S

Engine Assembly (continued)

Ref.	Part Number	Qty.	Description
1		1	Engine - Kohler Zt740 ●■
4	116-1946	1	Sheave-Pump, Drive
5	1-807259	1	Key-Machine 1/4 X 1/4 X 1
6	126-3583-03	1	Anchor-Clutch W/Belt Guide [bla
7	116-1604	1	Clutch
8	109-6919	1	Washer-Clutch
9	1-603610	2	Washer-Spring Disc 7/16
10	109-9761	1	Screw-HH 7/16-20 X 1 1/2 W/Loctite ◆
11	98-5975	4	Washer-Spring Disc 3/8
12	32144-102	4	Screw-HWH 3/8-16 X 1 1/2 Taptite
13	116-5316	1	Oil Drain Hose ASM
13:2	353-508	1	Plug-W/O-Ring
13:2:1	237-42	1	O-Ring
14	126-0973	1	ASM-Idler Arm W/Bearings
14:2	1-513034	2	Sleeve-Bearing
14:3	302-40	1	Zerk-90° 1/4-28
14:4	32144-11	1	Screw-HWH 5/16-18 X 3/4 Tf
15	116-2456	2	Pulley-Flat, 3.50 Dia
16	1-603384	1	Bushing-Pivot, Idler
17	3256-4	1	Washer-3/8 Std
18	323-15	1	Screw-HH 3/8-16 X 3 1/2
19	3231-5	2	Bolt-Carriage 3/8-16 X 1 3/4
20	104-8301	3	Nut-Nyloc 3/8-16 Flg
21	1-603402	1	Spring-Extension
22	115-9613	1	V-Belt
23	126-1477	1	Muffler, Kohler ▲
24	110-6697	2	Gasket-Exhaust
25	126-0268	1	Arrestor-Spark
26	126-0275	1	Screw-HWH

● Not serviced separately
▲ Includes spark arrestor and mounting screw.
◆ Use Pro-Lock, Nut Type (P/N 1-840022, .5ml tube) on threads.
■ Obtain parts from www.kohlerplus.com

Hydraulic Assembly

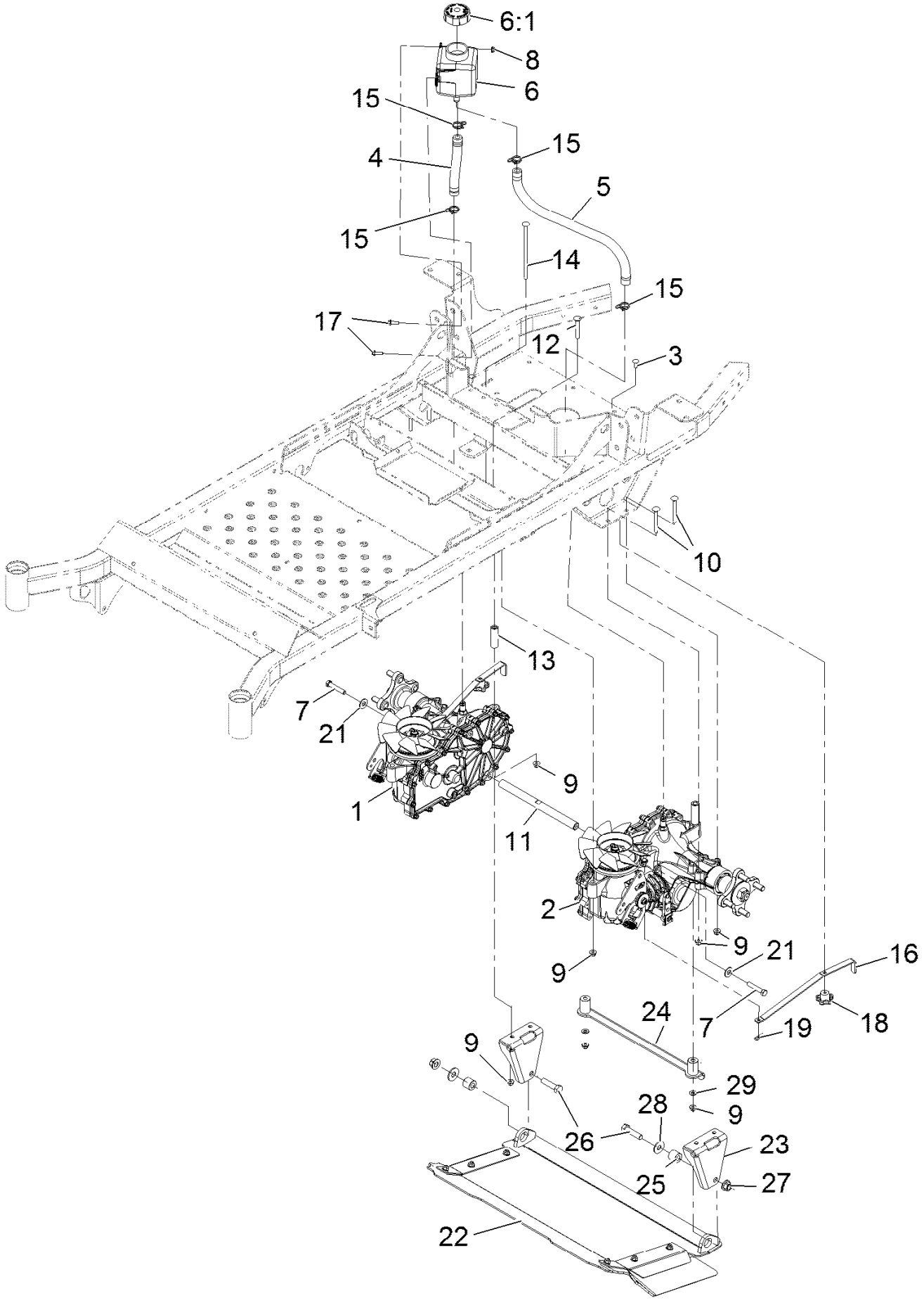

Hydraulic Assembly (continued)

Ref.	Part Number	Qty.	Description
1	116-6007	1	Transaxle ASM
2	116-6008	1	Transaxle ASM
3	3229-1	2	Bolt-Carriage 1/4-20 X 3/4
4	116-5641	1	Hose-Hydraulic
5	116-5642	1	Hose-Hydraulic
6	109-2250	1	Vent-Tank, HYD
6:1	109-3320	1	Cap-Reservoir, HYD
7	94-7972	2	Screw-HH W/Loctite ●
8	104-7201	2	Nut-Nyloc 1/4-20 Flg
9	104-8300	8	Nut-Nyloc 5/16-18 Flg
10	3230-26	4	Screw-CARR
11	116-6833	1	Shaft-Spacer
12	3230-7	2	Bolt-Carriage 5/16-18 X 2 1/4
13	116-5809	2	Spacer-Hydro
14	126-4991	2	Screw-CARR
15	126-0327	4	Clamp-Hose
16	109-5395	2	Arm-Hydro Bypass
17	32105-15	2	Screw-Machine 1/4-20 X 3/4
18	108-6402	2	Knob-Handle
19	1-806003	2	Hairpin-Cotter
21	3256-4	2	Washer-3/8 Std
22	126-1985	1	Discharge Tunnel ASM, Pioneer 60Rd
23	126-1988-03	2	Bracket-Discharge Mount, Pioneer 60Rd
24	116-6924-03	1	ASM-Hydro Gusset [black]
25	126-1705	2	Bushing-Sleeve
26	325-8	2	Screw-HH 1/2-13 X 1 1/4
27	99-5107	2	Nut-Lock 1/2-13
28	3256-6	2	Washer
29	1-303334	2	Washer-Spring Disc 5/16

● Use Pro-Lock, Nut Type (P/N 1-840022, .5ml tube) on threads.

RH Transaxle Assembly

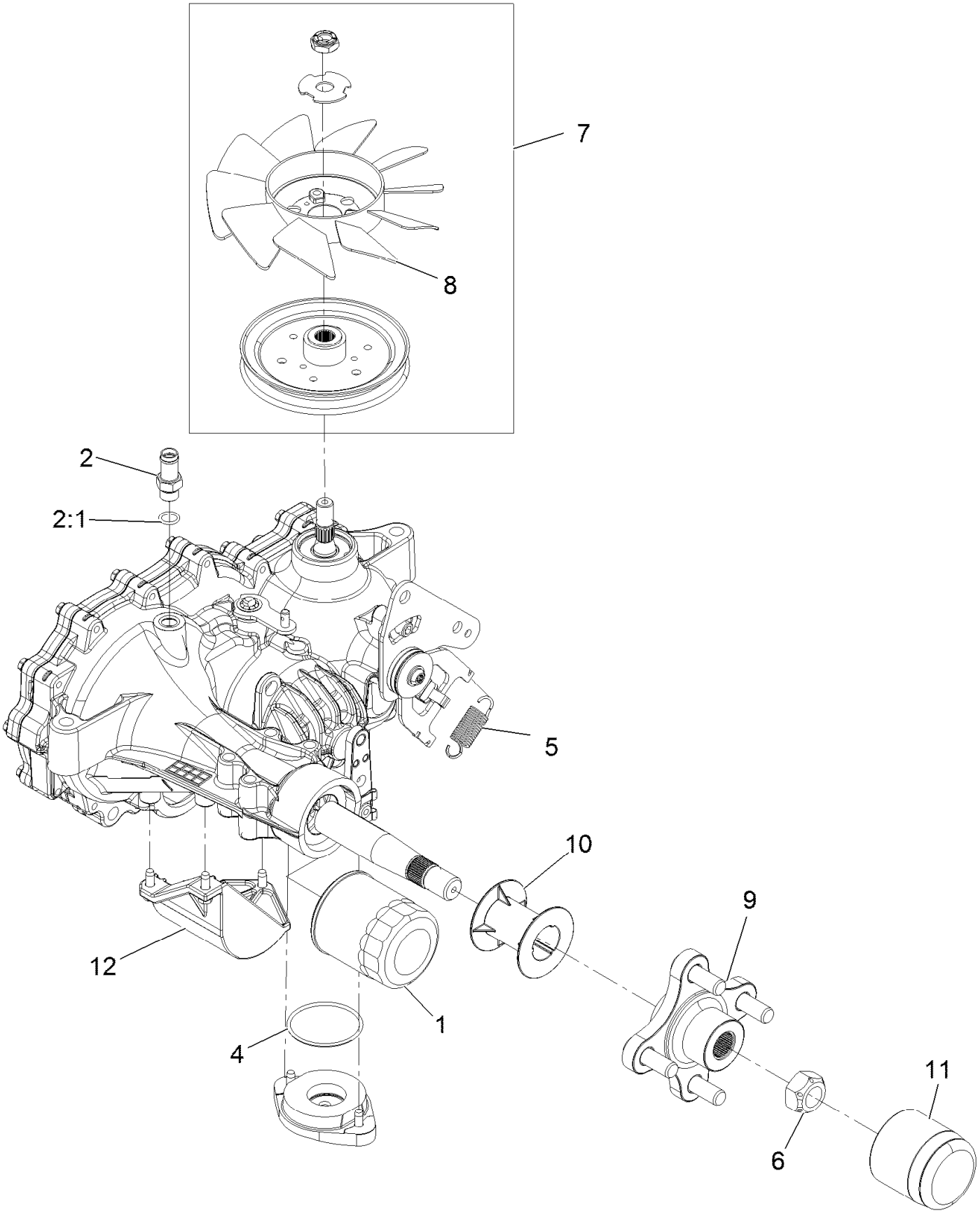

RH Transaxle Assembly (continued)

Ref.	Part Number	Qty.	Description
1	109-3321	1	Element-Oil Filter, HYD
2	109-3278	1	Adapter-Straight
2:1	237-42	1	O-Ring
4	109-3540	1	O Ring-Seal
5	109-5592	1	Spring-Extension
6	109-3536	1	Nut-Hub
7	121-3247	1	Fan And Pulley Kit
8	114-8453	1	Fan-7.0
9	116-3872	1	Hub-Offset
10	116-6213	1	Tube-Axle 2.04
11	116-6214	1	Cap-Long Axle
12	120-7981	1	Guard-Filter, RH
99	109-3537	1	Seal Kit ●

● Not illustrated

LH Transaxle Assembly

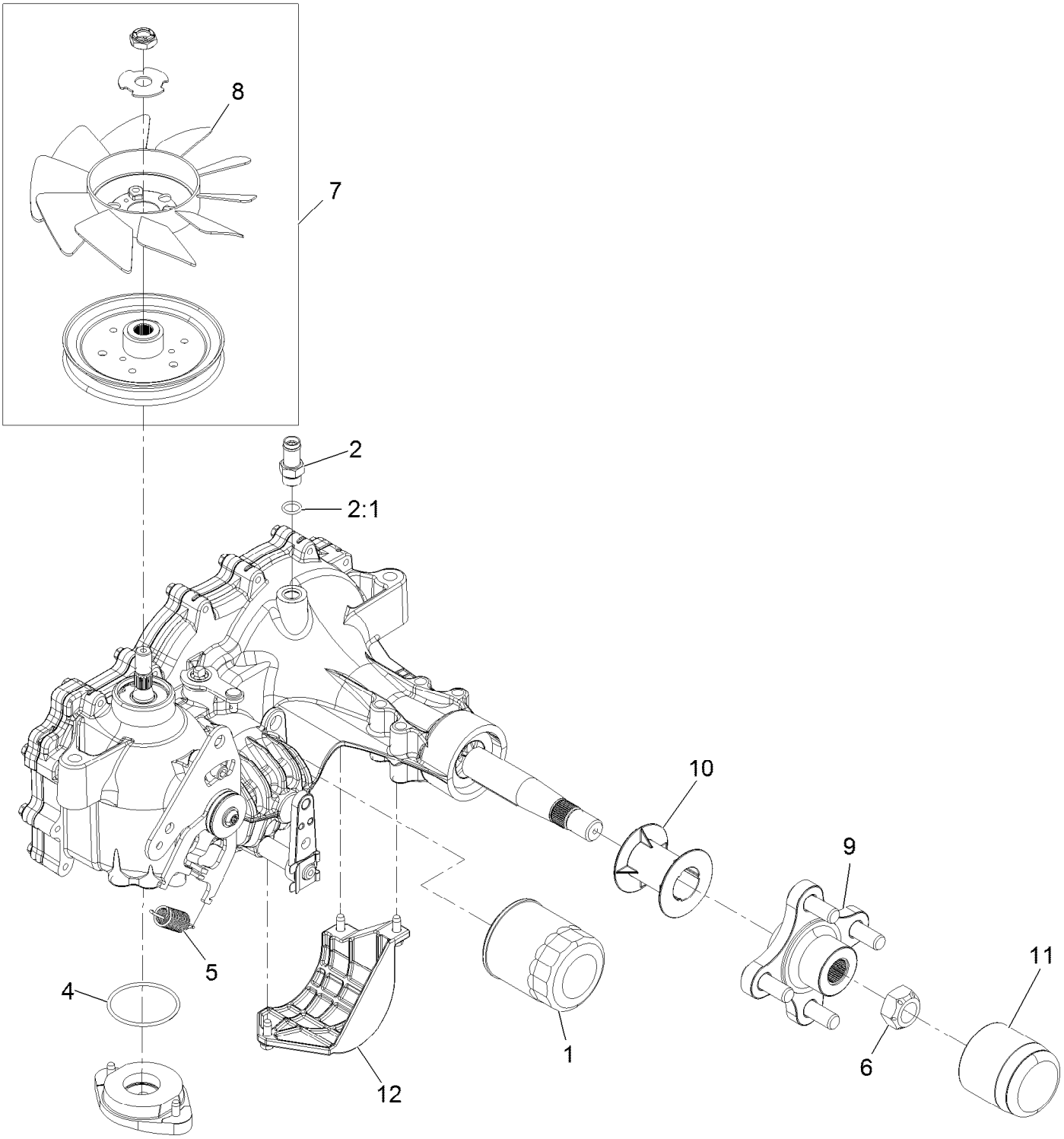

LH Transaxle Assembly (continued)

Ref.	Part Number	Qty.	Description
1	109-3321	1	Filter-Hydraulic
2	109-3278	1	Adapter-Straight
2:1	237-42	1	O-Ring
4	109-3540	1	O-Ring-Charge Seal Cover
5	109-5592	1	Spring
6	109-3536	1	Nut-Hub
7	121-3247	1	Fan And Pulley Kit
8	114-8453	1	Fan-7.0
9	116-3872	1	Hub-Offset
10	116-6213	1	Tube-Axle 2.04
11	116-6214	1	Cap-Long Axle
12	120-7979	1	Guard-Filter, LH
99	109-3537	1	Seal Kit ●

● Not illustrated

Electrical Assembly

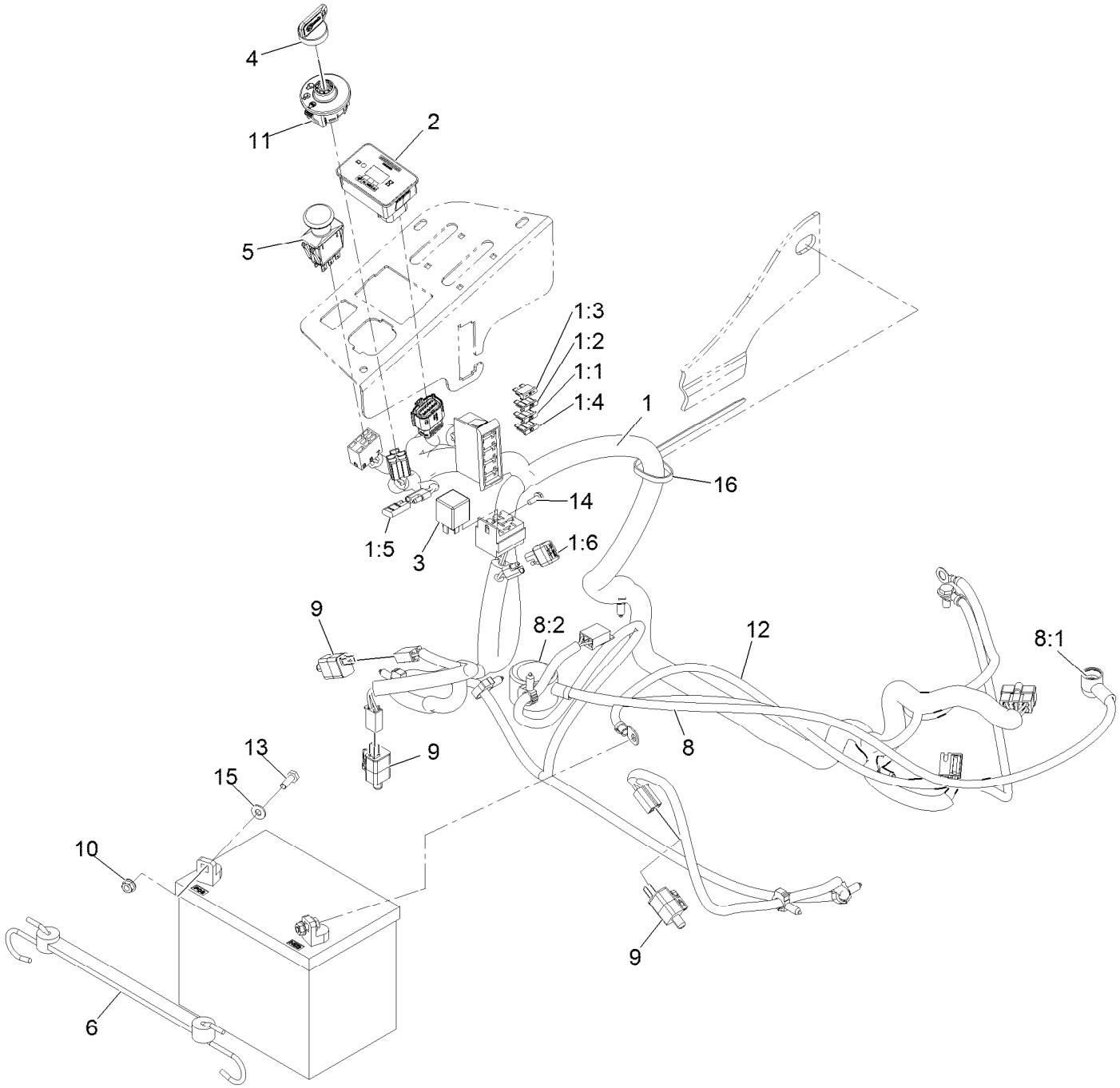

Electrical Assembly (continued)

Ref.	Part Number	Qty.	Description
1	116-4861	1	Harness, Wire ●
1:1	109102	1	Fuse-Blade, 25 Amp
1:2	1-816001	1	Fuse-Blade Type, 20 Amp
1:3	109355	1	Fuse-Blade, 15 Amp
1:4	218-578	1	Fuse-Blade, 10 Amp
1:5	116-0053	1	Cap-Plug
1:6	103-3895	1	Diode
2	116-5609	1	Module ASM
3	1-643275	1	Relay-12Vdc 40 Amp
4	1-603511	1	Key-Ignition
4	103-2106	1	Key-Exmark Logo
5	103-5221	1	Switch-PTO
6	104-2466	1	Holddown-Battery

Ref.	Part Number	Qty.	Description
8	109-7630	1	Positive Battery Cable ASM
8:1	109-2407	1	Insulator-Battery
8:2	1-543393	1	Insulator-Solenoid
9	110-6765	3	Switch
10	32128-33	2	Nut-Whizlock 1/4-20
11	117-2221	1	Switch-Ignition
12	117-7240	1	Cable-Battery, Negative
13	321-4	2	Screw-HH 1/4-20 X 3/4
14	32144-1	1	Screw-HWH #10-24 X 1/2 Taptite
15	3256-22	2	Washer-1/4 Sae
16	1-303335	1	Tie-Cable 7 15/16 (Large)

● Use dielectric grease on all unsealed connectors and terminals only. Do not apply in sealed connectors.

Notes:

Notes:

Notes:

MAXIMIZE THE PERFORMANCE OF YOUR EXMARK MACHINE.

EXMARK® PREMIUM ENGINE OIL

Exmark now offers a family of engine oil viscosities to perform well in any environment. Each viscosity has the same synthetic formulation to give you what you need in punishing conditions. We designed each grade to the highest quality, making it ideal even for diesel applications. Coupled with Exmark Premium Fuel Treatment, we have the performance products to make your machine hum.

EXMARK PREMIUM ENGINE OIL SAE 30/10W-30

- Meets zero shear requirements of a straight grade SAE 30 as well as the cold temp properties of a 10W-30.
- Most versatile oil in the industry.
- Superior corrosion protection over conventional oil - even in corrosive, humid environments.

EXMARK PREMIUM ENGINE OIL SAE 10W-50

- Full synthetic formulation gives you peak performance. Don't settle for less.
- Wide span multi-grade combines easy starting in cold weather with maximum protection in high temperature operation.
- Reduce friction & wear over standard mineral formulations.

EXMARK PREMIUM ENGINE OIL UTV FORMULATION

- 4-cycle high-temp formulation.
- Heavier viscosity, full synthetic, perfect for your UTV.

EXMARK PREMIUM ENGINE OIL SAE 20W-50

- Perfect for your big block engine, or any application in severe service.
- Same full synthetic formulation as all other Exmark Premium viscosities.
- Also effective for use in severe service small block engines.

EXMARK PREMIUM ENGINE OIL SAE 0W-40

- The perfect choice for when the weather turns cold or unpredictable, and your Exmark UTV has to perform.
- Commercial quality for severe service.
- Advanced additive package helps prevent corrosion from long-term storage.

EXMARK PREMIUM UTV EXTREME CONDITIONS GEAR OIL

- SAE 80W-90, designed to keep your UTV performing at its peak.
- Shear stable, hypoid gear lube.
- Includes a premium additive system to combat wear, oxidation, rust & corrosion.

Available from your local Exmark dealer. Find your closest dealer at exmark.com

EXMARK ACCESSORIES AND OPTIONS*

MID-MOUNT RIDING ACCESSORIES AND OPTIONS

CUSTOM RIDE SEAT SUSPENSION SYSTEM
FULL SUSPENSION SEAT
DECK LIFT ASSIST KIT
HITCH KIT
LIGHT KIT
12V POWER PORT
MICRO-MULCH SYSTEM
OPERATOR CONTROLLED DISCHARGE
SUN SHADE
TRASH CONTAINER
TURF STRIPER
ULTRA VAC COLLECTION SYSTEM
ULTRA VAC QUICK DISPOSAL SYSTEM

OUT-FRONT RIDING ACCESSORIES AND OPTIONS

CUSTOM RIDE SEAT SUSPENSION SYSTEM
DUAL-TAIL WHEEL
FLOOR PAN EXTENDER
HITCH KIT
LIGHT KIT
MICRO-MULCH SYSTEM
ROLL OVER PROTECTION SYSTEM (ROPS)
SNOW BLADE
SNOWBLOWER
SUN SHADE
TRASH CONTAINER
ULTRA VAC COLLECTION SYSTEM
ULTRA VAC QUICK DISPOSAL SYSTEM
WEATHER CAB

WALK-BEHIND ACCESSORIES AND OPTIONS

GRASS CATCHER
MICRO-MULCH SYSTEM
TURF STRIPER
STANDON

*Some accessories and options not available for some models.

Place Model No. and Serial No. Label Here (Included in the Literature Pack) or Fill in Below

Model No. _____

Serial No. _____

Date Purchased _____

Engine Model No. and Spec. No. _____

Engine Serial No. (E/No) _____

© 2015 Exmark Mfg. Co., Inc.
All Rights Reserved

Industrial Park Box 808
Beatrice, NE 68310
(402) 223-6285
Fax (402) 223-5489

Part No. 4502-664 Rev. A
Printed in the USA.

www.exmark.com