LAZER Z® E-SERIES

Model No. LZE742GKC604A3—Serial No. 316000000 and Up

Picture below may not reflect actual product.

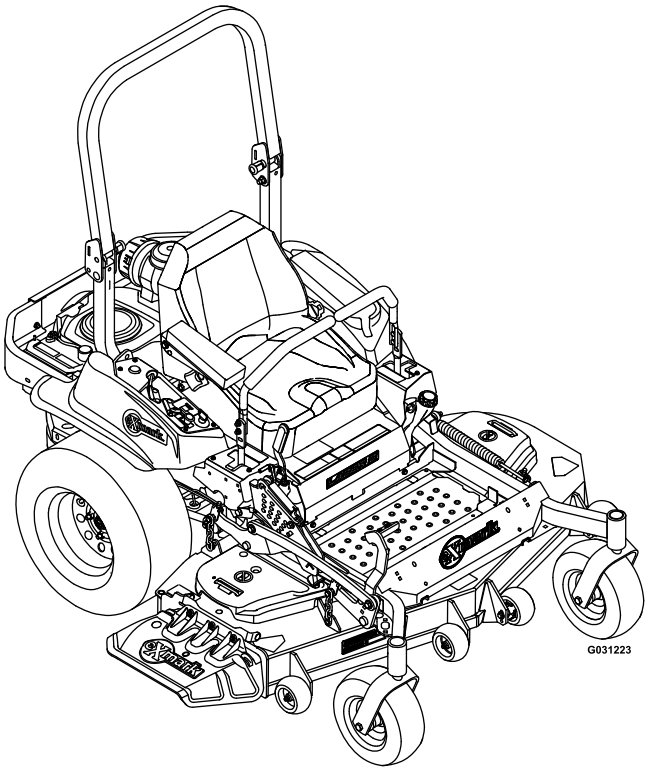

Parts Manual

Part No. 4502-686 Rev. A

Ordering Replacement Parts

To order replacement parts, please supply the part number, the quantity, and the description of each part desired.

Understanding Reference Numbers

Each identified part in an illustration has a reference number. The reference number for a part also appears in the parts list, along with other information about the part.

This catalog uses two special reference number formats, one to indicate parts in a service assembly and another to indicate the quantity of a given part in an illustration.

Service Assembly Reference Numbers

Parts in service assemblies have reference numbers in the form a:b. The a represents the reference number of the entire service assembly and the b represents a sequential number unique to each part within the service assembly.

For example, a wheel assembly might be identified by reference number 6, the tire by 6:1, the valve by 6:2, and the wheel by 6:3. When you order the assembly identified by reference number 6, you receive all parts identified by reference numbers 6:1,6:2, and 6:3. However, you may also order any part individually. Reference numbers of this type appear in illustration and in parts lists.

Reference Numbers Indicating Quantity

In an illustration, if a reference number indicates more than one part, the reference number has the form nX y. The n represents the quantity of the part, the X is the multiplication symbol, and the y represents the reference number.

For example, in an illustration, the reference number 2X 37 means that two of the parts identified by reference number 37 are indicated.

List of Abbreviations

AR: as required

ASM: assembly

BBC: blade brake control

BHTF: button head thread forming

CARR: carriage

CCW: counter clockwise

CW: clockwise

DEG: degrees

DPA: Dual Point Adjustment

ECM: electronic control module

EXT: external

FH: flat head

GA: gauge

HD: heavy-duty

HF: hex flange

HH: hex head

HHF: hex head flange

HHFTF: hex head flange thread forming

HJ: hex jam

HLH: hex lag head

HOC: height-of-cut

HP: high pressure

HSBH: hex socket button head

HSFH: hex socket flat head

HSH: hex socket head

HWH: hex washer head

HWHTF: hex washer head thread forming

HYD: hydraulic

LH: left hand

LP: low pressure

LPG: Liquefied Petroleum Gas

NI: nylon insert

NPTF: national pipe thread fine

PFH: phillips flat head

PPH: phillips pan head

PPHTF: phillips pan head thread forming

PRH: phillips round head

PTH: phillips truss head

PTO: power-take-off

RH: right hand

ROPS: roll-over protection system

RRB: rear roller brush

SFH: slotted fillister head

SHH: slotted hex head

SHWH: slotted hex washer head

SPH: slotted pan head

SQH: square head

SRH: slotted round head

STD: standard

TAP: self tapping

TTH: torx truss head

Touch Up Paint

Exmark black touch up spray paint – gloss black.

Exmark red touch up paint (spray paint – P/N 1-850337 - .6 oz liquid bottle – P/N 103-9140).

© 2015—Exmark Mfg. Co., Inc.
Industrial Park Box 808
Beatrice, NE 68310

Contact us at www.Exmark.com.
Printed in the USA.
All Rights Reserved

If your Exmark dealer does not have the Exmark part in stock, Exmark will get the parts to the dealer the next business day or the part will be FREE Guaranteed!! (Some restrictions apply. See your participating Exmark Dealer for details.)

Contents

Complete Deck Assembly 4
Deck Assembly 6
Deck W/Decals Assembly No. 116-4232 8
Deck Idler Assembly No. 116-3755 10
Main Frame Assembly 12
E-Series Decal 14
Roll-Over Protection System 16
Roll-Over Protection System Assembly No. 116-2882 18
Front Caster and Fork Assembly 20
Fork and Caster Wheel Assembly 22
Deck Lift Assembly 24
Height-of-Cut Assembly No. 109-7438 26
Control Assembly 28
Motion Control Assembly 30
Rear Wheel Assembly 32
Park Brake Assembly 34
Seat Assembly 36
Seat W/Tracks Assembly No. 116-8912 38
Fuel Tank Assembly 40
Fuel Tank Assembly No. 116-3978 42
Engine Assembly 44
Hydraulic Assembly 46
LH Hydro Assembly No. 126-1323 48
RH Hydro Assembly No. 126-1324 50
Pump Idler Assembly No. 116-1255 52
Electrical Assembly 54

Complete Deck Assembly

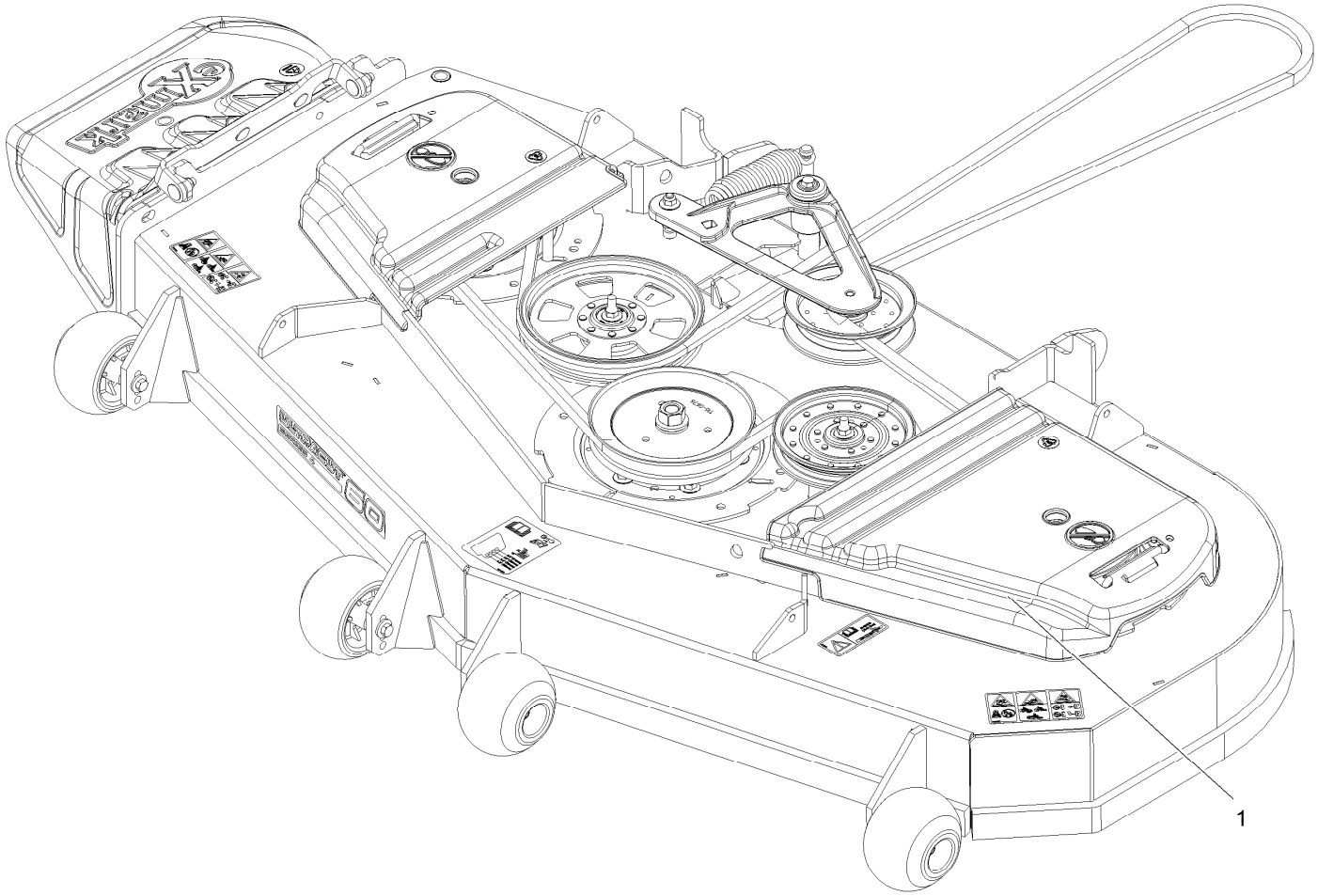

Complete Deck Assembly (continued)

Ref.	Part Number	Qty.	Description
1	116-3599	1	ASM,604 Deck Complete

Deck Assembly

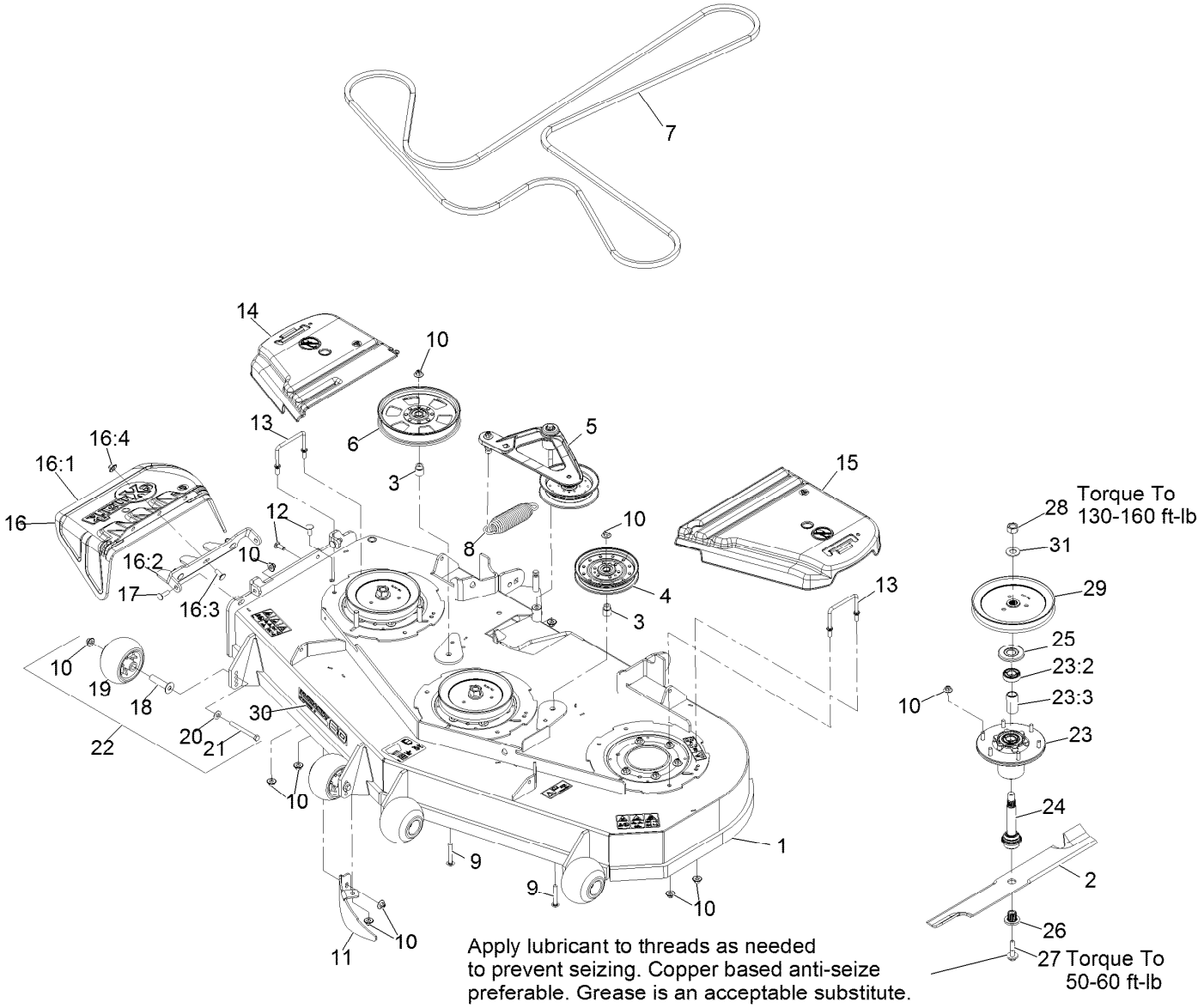

Deck Assembly (continued)

Ref.	Part Number	Qty.	Description
1	116-4232	1	Deck ASM,W/Decals 60
2	103-6393	3	Blade, Mulching ●
2	103-6388	3	Blade, Low Lift
2	103-6383	3	Blade, Solid
2	103-6403	3	Blade, Notched
2	116-5174	3	Blade-Extreme 2, 20.50"
3	1-633456	2	Bushing, Idler
4	116-4667	1	Idler-Pulley, Flat
5	116-3755	1	Deck Idler ASM
6	116-9639	1	Pulley-Idler, Flat
7	109-8073	1	Belt,V-5V-198.75
8	116-6317	1	Spring-Extension
9	3231-44	2	Bolt-Carriage 3/8-16 X 2 1/2
10	109-6658	32	Nut-Nyloc 3/8-16 Flg
11	116-5614-01	1	Dogleg - Lz60
12	3231-22	2	Bolt-Carriage 3/8-16 X 1
13	109-6982	2	Wireform-Cover
14	116-0094	1	Cover-Belt, RH
15	109-6938	1	Cover-Belt, LH
16	109-7188	1	ASM,Discharge Chute
16:1	109-2738	1	Chute, Discharge
16:2	109-8675-01	1	Bracket,Discharge Chute
16:3	3231-22	3	Bolt-Carriage 3/8-16 X 1
16:4	109-6658	3	Nut-Nyloc 3/8-16 Flg
17	3231-28	2	Bolt-Carriage 3/8-16 X 1 1/4
18	116-8131	4	Axle, Roller
19	103-8415	4	Roller-Anti-Scalp
20	98-5975	4	Washer-Spring Disc 3/8
21	116-9362	4	Screw-HH 3/8-16 X 3 3/4 Gr 8
22	116-9981	3	Kit, Anti-Scalp Roller
23	116-3344	3	ASM-Cutter Hsg With Bearings
23:2	116-0720	2	Bearing-Ball
23:3	116-3312	1	Spacer-Bearing
24	116-3341	3	ASM-Spindle And Seal
25	116-1286	3	Guard,Bearing Top .989
26	103-3037	3	Bushing, Splined
27	109-9220	3	Screw-Sems 1/2-20 X 2.19
28	116-7306	3	Nut-Hex
29	116-0676	3	Sheave,Blade Drive 7.25
30	126-6589	1	Decal, 604
31	103-2802	3	Washer-Spring Disc 3/4

● Requires installation of mulch kit for proper mulching. See your Exmark dealer for details.

Deck W/Decals Assembly No. 116-4232

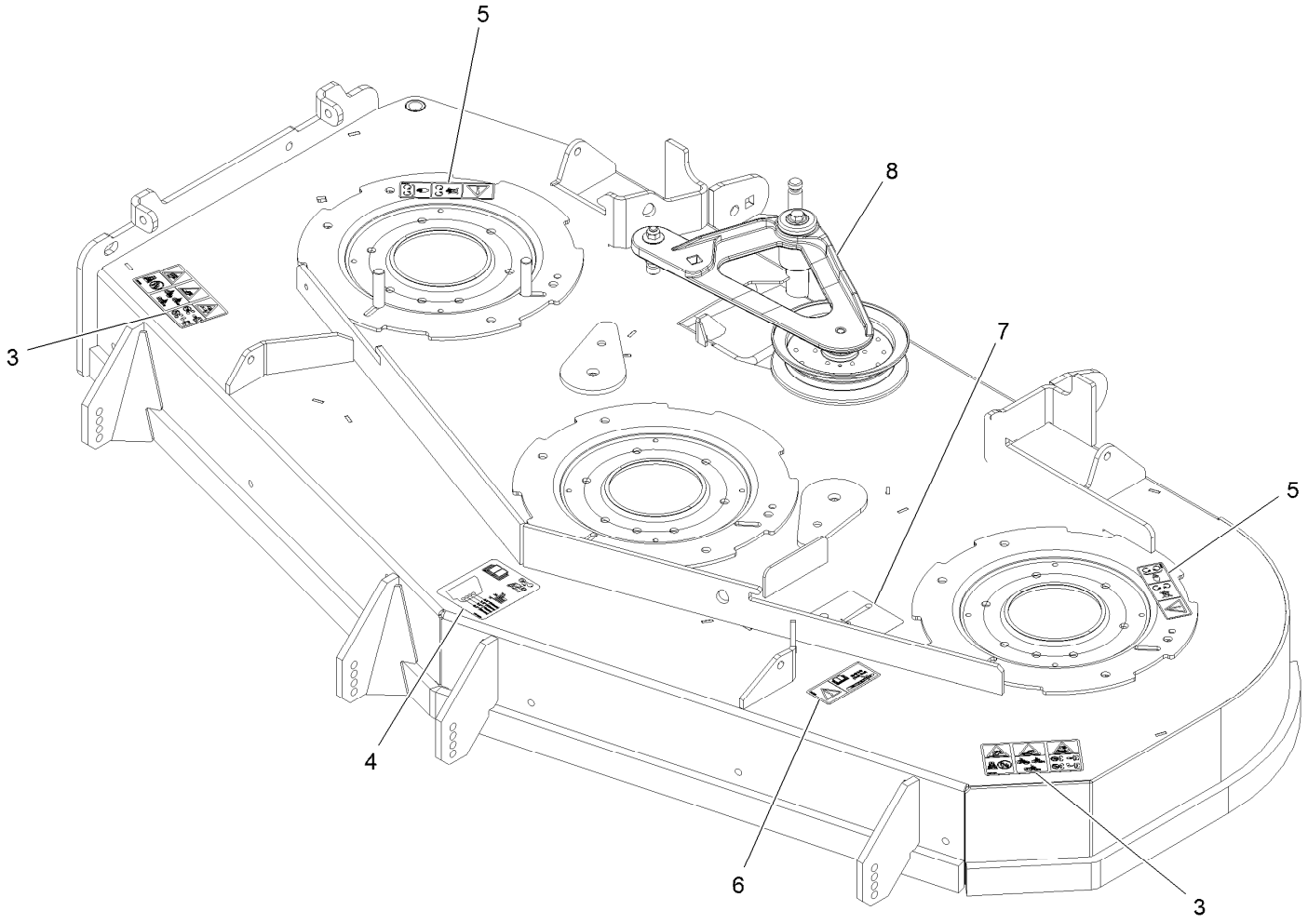

Deck W/Decals Assembly No. 116-4232 (continued)

Ref.	Part Number	Qty.	Description
3	126-6464	2	Decal-Danger Thrown Objects
4	109-6036	1	Decal-Roller, Anti-Scalp
5	112-9028	2	Decal-Missing, Cover
6	116-8283	1	Decal-Bolt Torque
7	116-8727	1	Decal-Belt Routing
8	116-3755	1	Deck Idler ASM

Deck Idler Assembly No. 116-3755

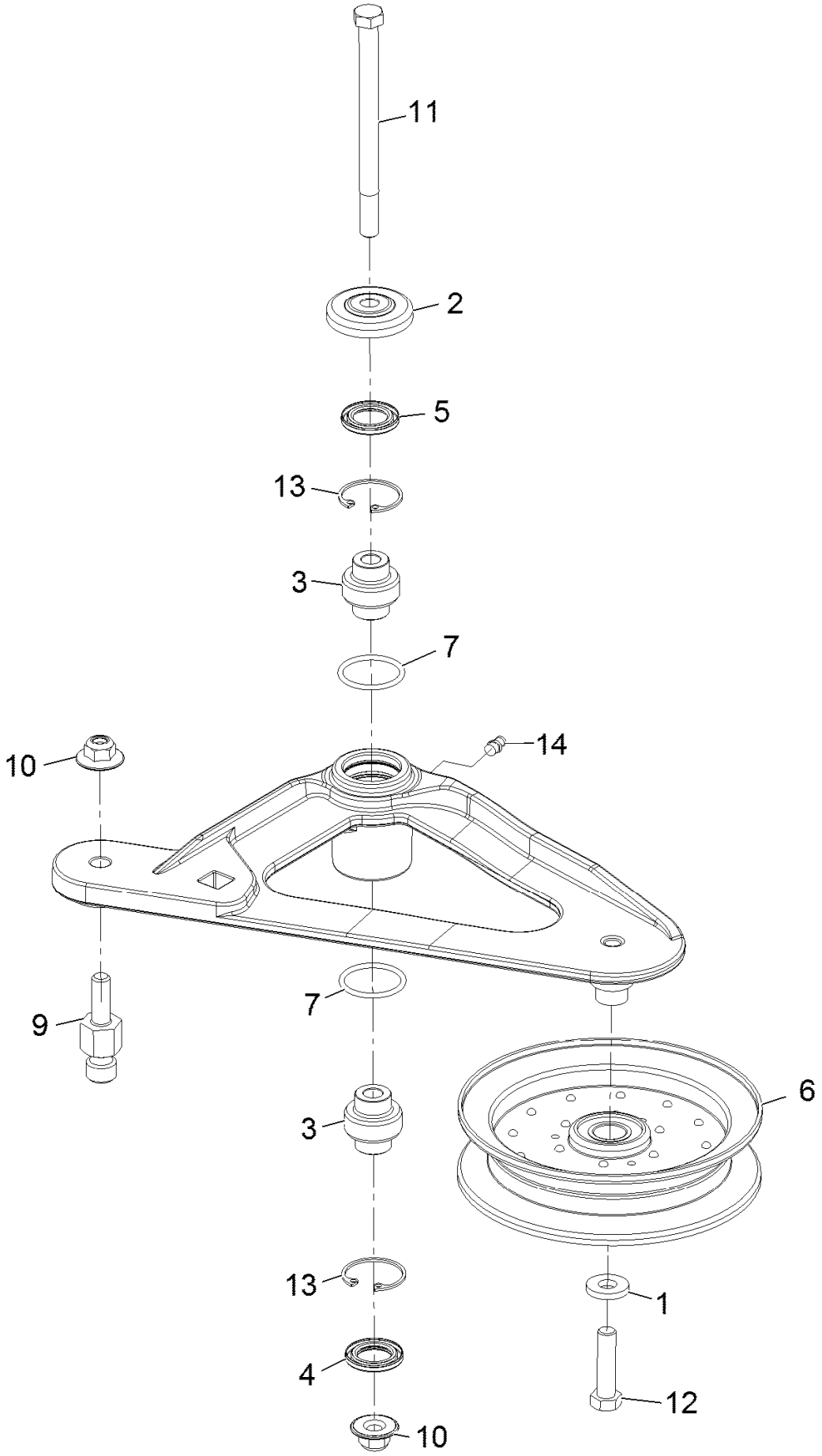

Deck Idler Assembly No. 116-3755 (continued)

Ref.	Part Number	Qty.	Description
1	43-0940	1	Spacer
2	103-2916	1	Guard-Top
3	103-3504	2	Bearing-Spherical
4	103-3505	1	Seal-Double Lip
5	103-3506	1	Seal-Single Lip
6	116-4668	1	Idler-Pulley, Flanged
7	106-7159	2	O-Ring
9	126-0423	1	Pin-Spring, Anchor
10	109-6658	2	Nut-Nyloc 3/8-16 Flg
11	109-7409	1	Screw-Shoulder 3/8-16 X 5
12	323-8	1	Screw-HH 3/8-16 X 1 1/2
13	32120-10	2	Ring-Retaining
14	302-19	1	Zerk-1/4-28 Str

Main Frame Assembly

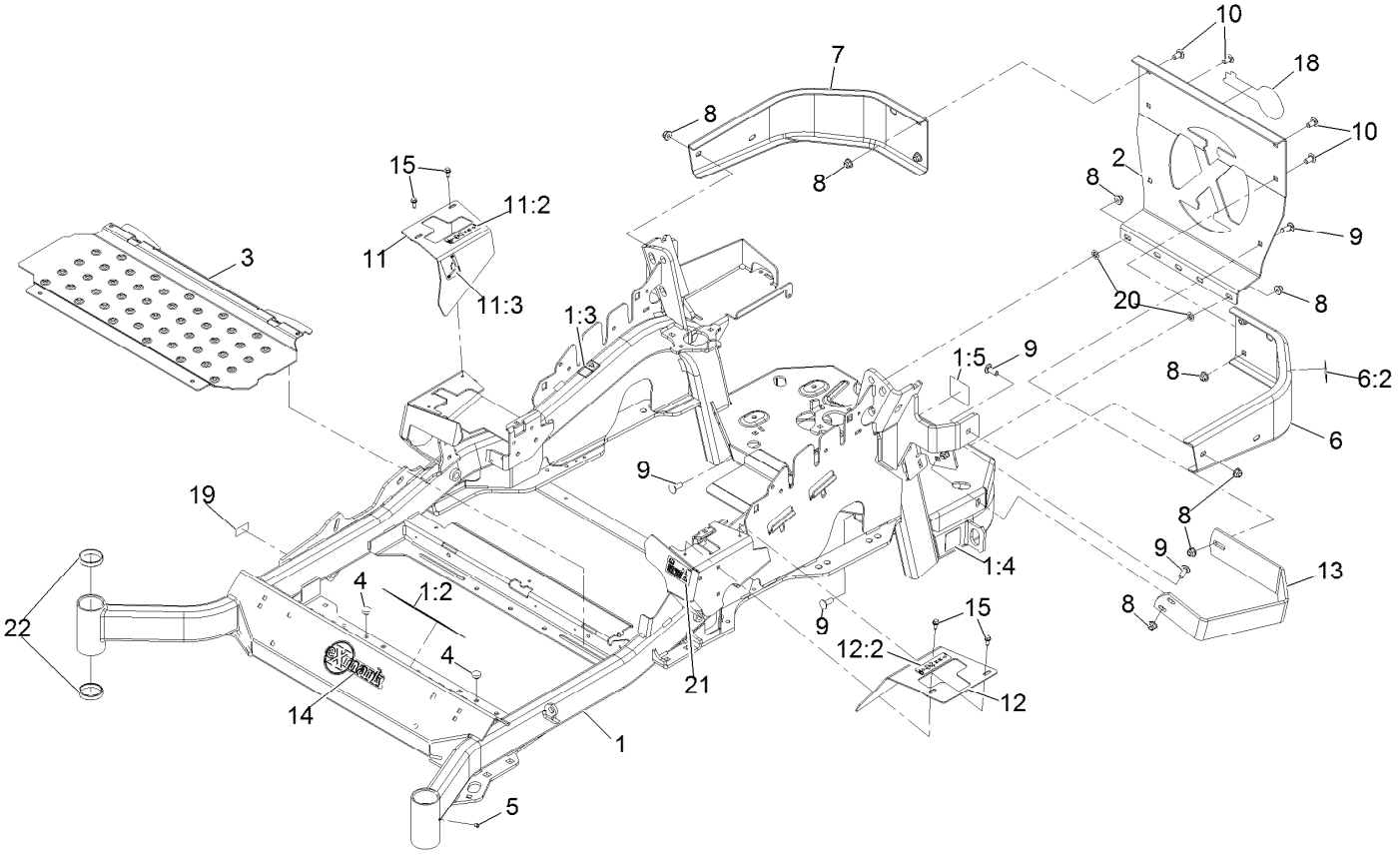

Main Frame Assembly (continued)

Ref.	Part Number	Qty.	Description
1	126-6619	1	ASM-Mainframe 60
1:2	132-0871	1	Decal-Danger
1:3	106-5517	2	Decal-Warning, Hot Surface
1:4	106-2655	2	Decal-Hazard, Pinched Finger
1:5	116-4858	1	Decal-Spark Arrester
2	109-8863-03	1	Plate,Rear Guard
3	116-8898-01	1	Floorpan
4	1-513658	2	Bumper
5	1-811010	2	Plug
6	116-0180	1	LH Bumper ASM
6:2	106-5517	1	Decal-Warning, Hot Surface
7	116-0057-03	1	Bumper-RH
8	104-8301	11	Nut-Nyloc 3/8-16 Flg
9	3231-22	7	Bolt-Carriage 3/8-16 X 1
10	3231-21	4	Bolt-Carriage 3/8-16 X 3/4

Ref.	Part Number	Qty.	Description
11	116-5899	1	RH Motion Control Cover ASM
11:2	99-8936	1	Decal-Control, Motion
11:3	116-5988	1	Decal-Park Brake, Ce
12	116-0580	1	LH Motion Control Cover ASM
12:2	99-8936	1	Decal-Control, Motion
13	126-2067-03	1	Guard-Muffler
14	126-6969	1	Decal-Exmark Logo
15	32144-10	4	Screw-HWH 1/4-20 X .62
18	126-6965	1	Decal-Exmark Logo
19	126-4345	1	Decal-Patent Ttco.Com
20	107-3154	2	Nut-Push 3/8-16
21	117-3864	1	Decal-Fuel Fill, Ce
22	1-543508	4	Cup-Bearing Tapered Roller

E-Series Decal

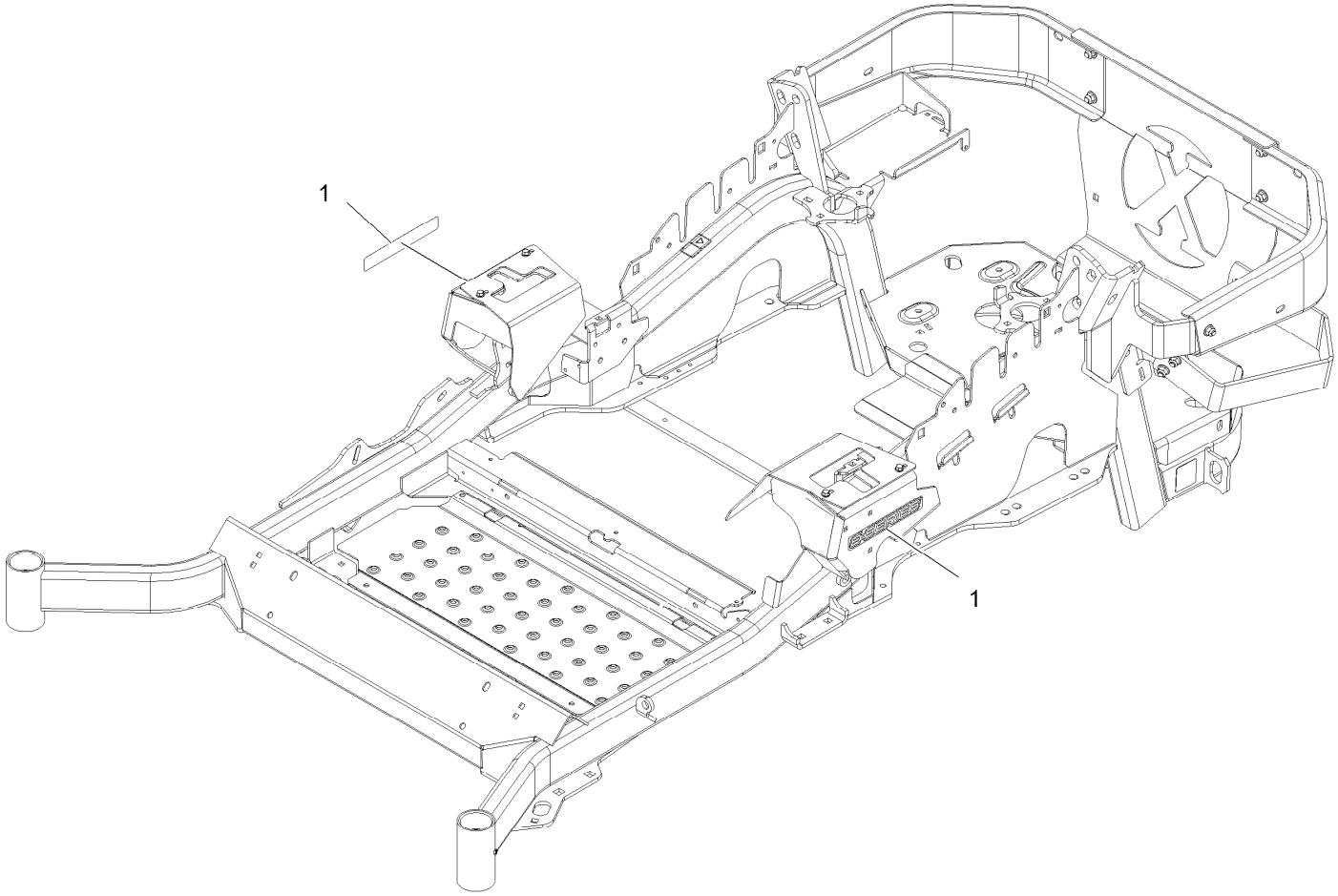

E-Series Decal (continued)

Ref.	Part Number	Qty.	Description
1	126-6571	2	Decal-E-Series

Roll-Over Protection System

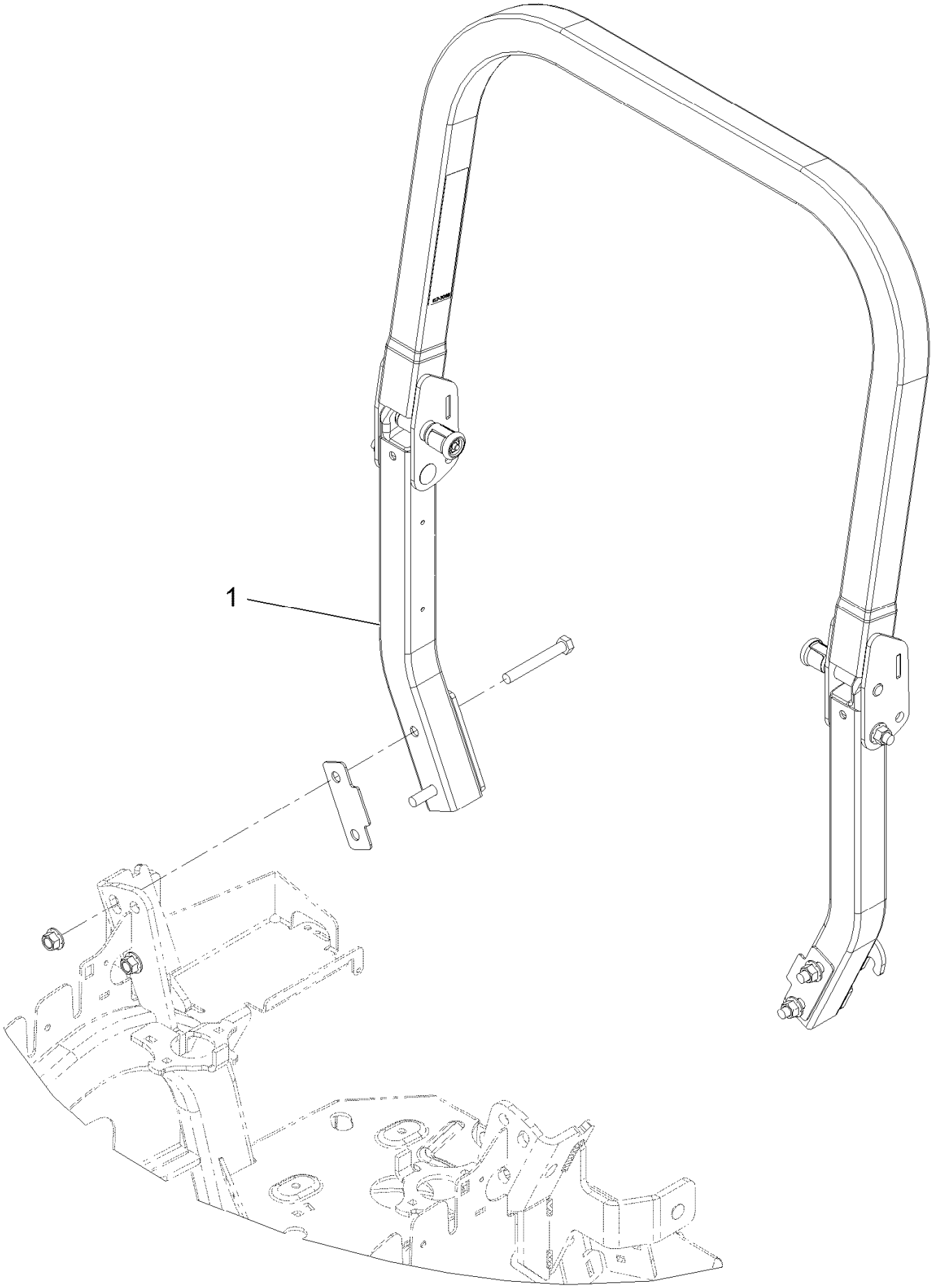

Roll-Over Protection System (continued)

Ref.	Part Number	Qty.	Description
1	116-2882	1	ROPS ASM

Roll-Over Protection System Assembly No. 116-2882

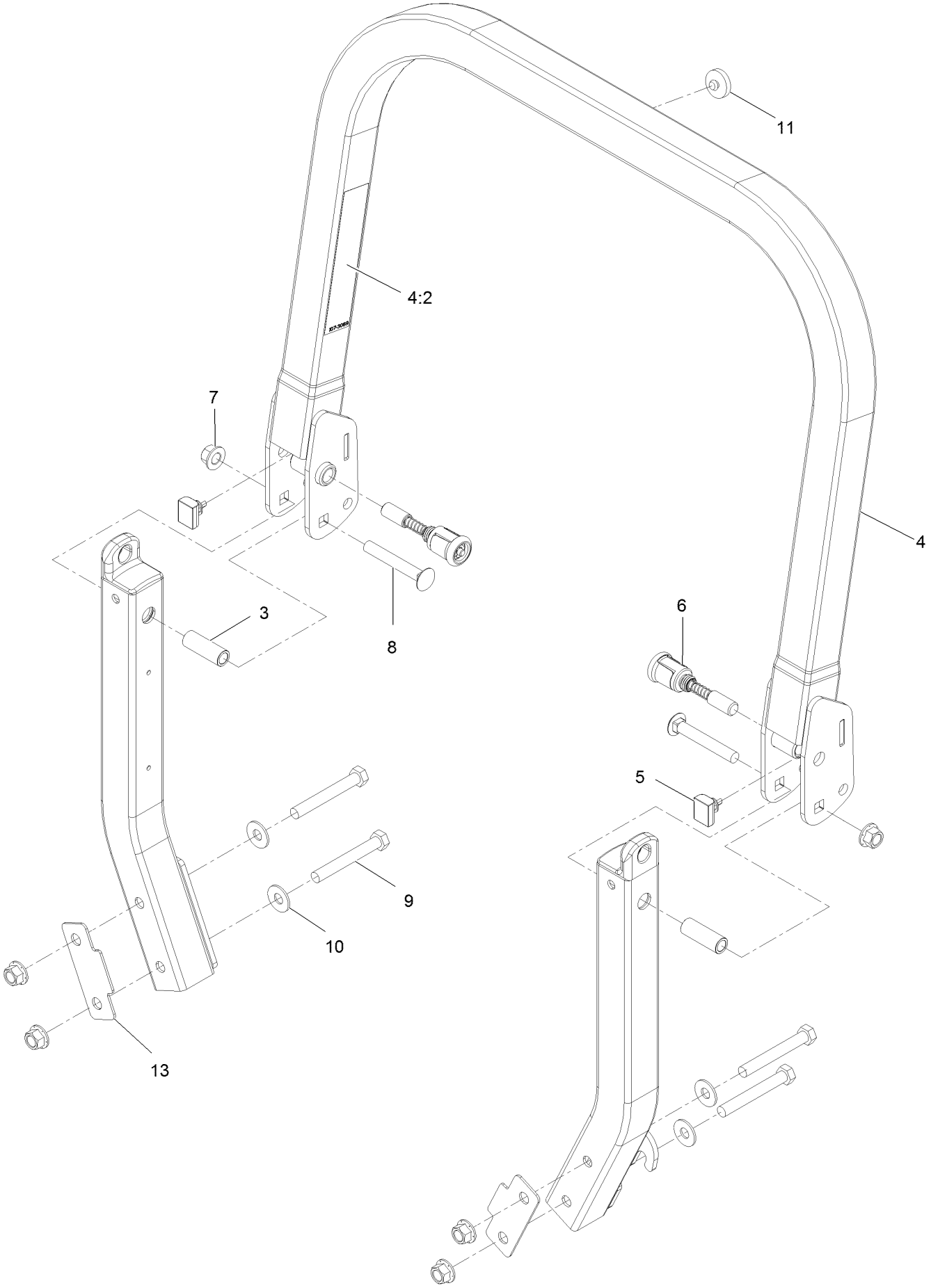

Roll-Over Protection System Assembly No. 116-2882 (continued)

Ref.	Part Number	Qty.	Description
3	109-6653	2	Spacer
4	116-0019	1	Upper ROPS ASM
4:2	107-3069	1	Decal-Warning, Folding ROPS
5	109-5337	2	Bumper-ROPS
6	116-0104	2	Pin-Spring
7	99-5107	6	Nut-Lock 1/2-13
8	3233-10	2	Bolt-Carriage 1/2-13 X 3 1/2
9	325-35	4	Screw-HH
10	109-9505	4	Washer, Spring Disc 1/2
11	109-9233	1	Bumper-Push-In, Rubber
13	116-0960	2	Spacer

Front Caster and Fork Assembly

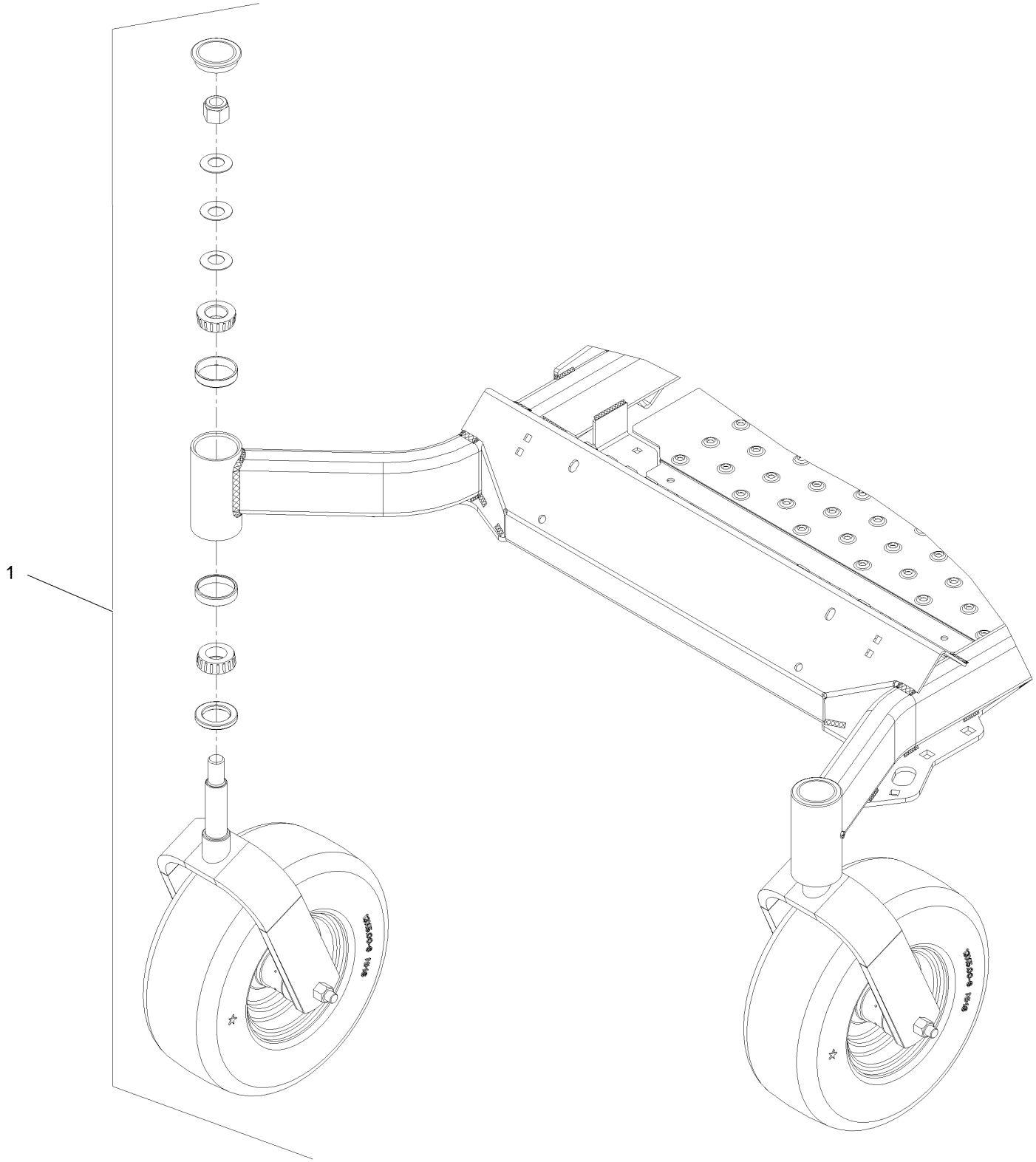

Front Caster and Fork Assembly (continued)

Ref.	Part Number	Qty.	Description
1		2	Front Caster And Fork ASM ●

● Not serviced separately

Fork and Caster Wheel Assembly

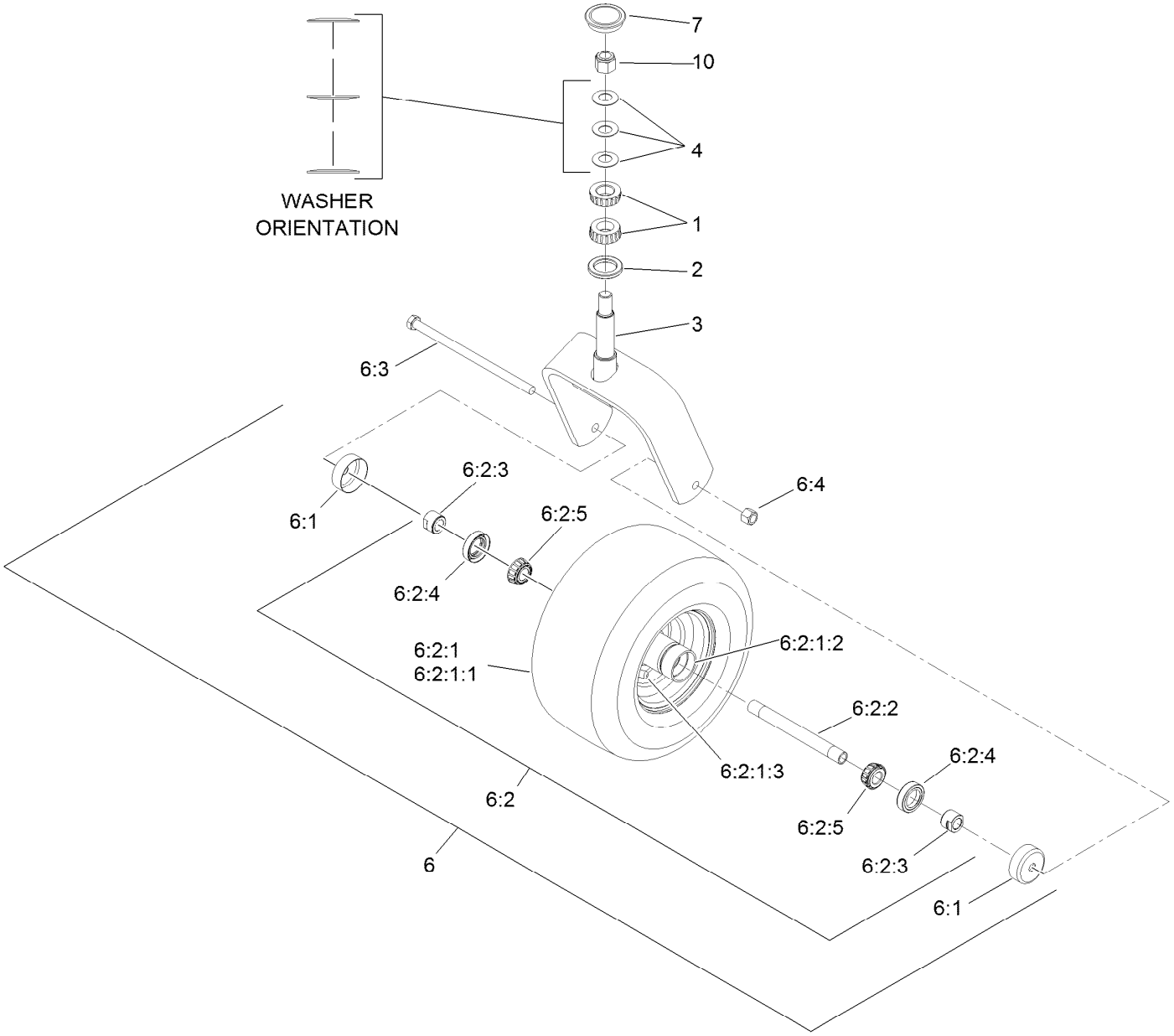

Fork and Caster Wheel Assembly (continued)

Ref.	Part Number	Qty.	Description
1	1-543509	2	Bearing-Roller, Tapered
2	116-5647	1	Seal-Grease
3	116-6707-01	1	Caster
4	1-633508	3	Washer-Bellville
6	117-0361	1	Caster Wheel ASM
6:1	103-2768	2	Guard-Seal
6:2		1	Wheel ASM ●
6:2:1		1	Wheel And Tire ASM ●
6:2:1:1	1-523009	1	Tire
6:2:1:2	1-633584	2	Bearing-Cup
6:2:1:3	5108	1	Valve
6:2:2	103-5156	1	Axle-Caster
6:2:3	103-3051	2	Spacer-Nut
6:2:4	103-0063	2	Seal-Caster
6:2:5	1-633585	2	Bearing-Cone, Taper
6:3	325-39	1	Screw-HH
6:4	3296-23	1	Nut-Lock, NI
7	103-4882	1	Cap-Grease
10	3296-51	1	Nut-Lock, NI

● Not serviced separately

Deck Lift Assembly

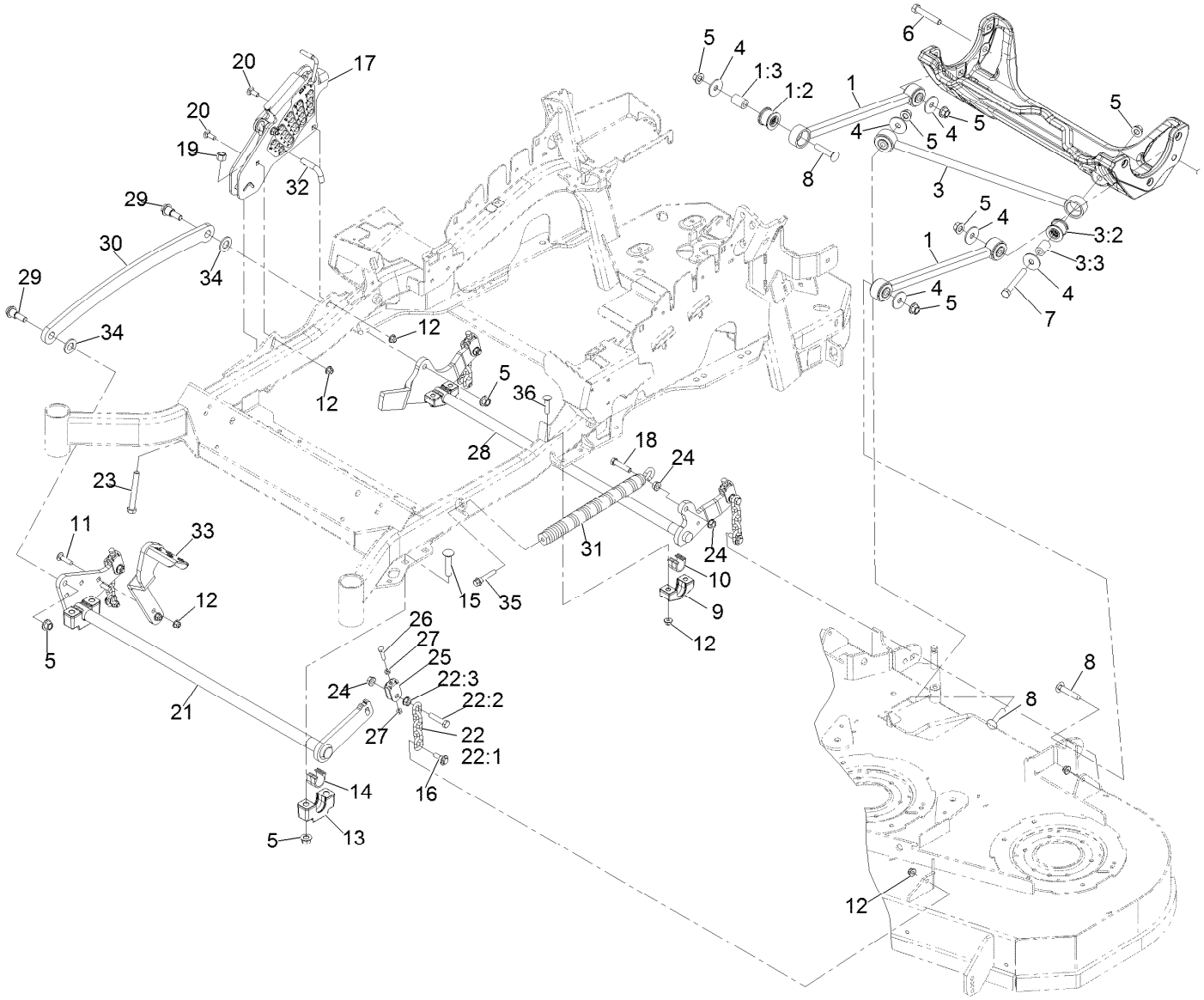

Deck Lift Assembly (continued)

Ref.	Part Number	Qty.	Description
1	116-2031	2	Long Strut ASM
1:2	109-5009	2	Bushing-Suspension, Rubber
1:3	109-5010	2	Spacer
3	109-5013	1	Panhard Rod ASM
3:2	109-5009	2	Bushing-Suspension, Rubber
3:3	109-5010	2	Spacer
4	86-1990	6	Washer
5	99-5107	12	Nut-Lock 1/2-13
6	325-12	2	Screw-HH 1/2-13 X 3
7	325-17	1	Screw-HH 1/2-13 X 4
8	3233-34	3	Bolt-Carriage 1/2-13 X 2 1/2
9	127-0553	2	Support-Cross Shaft, Bearing Rear
10	109-7173	2	Bearing-Cross Shaft, Rear
11	3231-4	2	Bolt-Carriage 3/8-16 X 1 1/2
12	104-8301	12	Nut-Nyloc 3/8-16 Flg
13	109-9409	2	Support-Cross Shaft, Bearing
14	109-9410	2	Bearing-Cross Shaft, Front
15	116-1700	4	Bolt-Carriage 1/2-13 X 2 1/2 Spl Neck
16	109-9840	4	Screw-Hex Flange 3/8-16 X .80
17	109-7438	1	HOC ASM
18	109-9065	1	Screw-HH 7/16-14 X 2
19	3296-23	1	Nut-Nyloc 1/2-13
20	3231-2	2	Bolt-Carriage 3/8-16 X 1
21	126-2475-03	1	Decklift-Front
22	116-0756	4	Deck Lift Chain ASM
22:1	1-633447	1	Chain-Lift, Deck
22:2	109-9065	1	Screw-HH 7/16-14 X 2
22:3	32128-37	1	Nut-Whizlock 7/16-14
23	116-0559	1	Bolt-HH 1/2-13 X 4 Tap
24	32128-37	6	Nut-Whizlock 7/16-14
25	109-9066	4	Yoke-Adjust, Deck
26	322-47	4	Screw-HH 5/16-18 X 1 1/4
27	3218-2	8	Nut-Jam 5/16-18
28	116-0459-03	1	Lift-Deck, Rear
29	116-0780	2	Screw-Shoulder HHF 1/2-13 X 1.12
30	116-0797-03	1	Link-Lift, Deck
31	116-0000	1	Spring-Extension
32	116-5584	1	Pin-HOC
33	116-1919-01	1	Lever-Foot
34	3256-28	2	Washer-3/4 Sae
35	92-7674	1	Screw-Shcs 3/8-16 X 2.212
36	3231-7	4	Bolt-Carriage 3/8-16 X 2 1/4

Height-of-Cut Assembly No. 109-7438

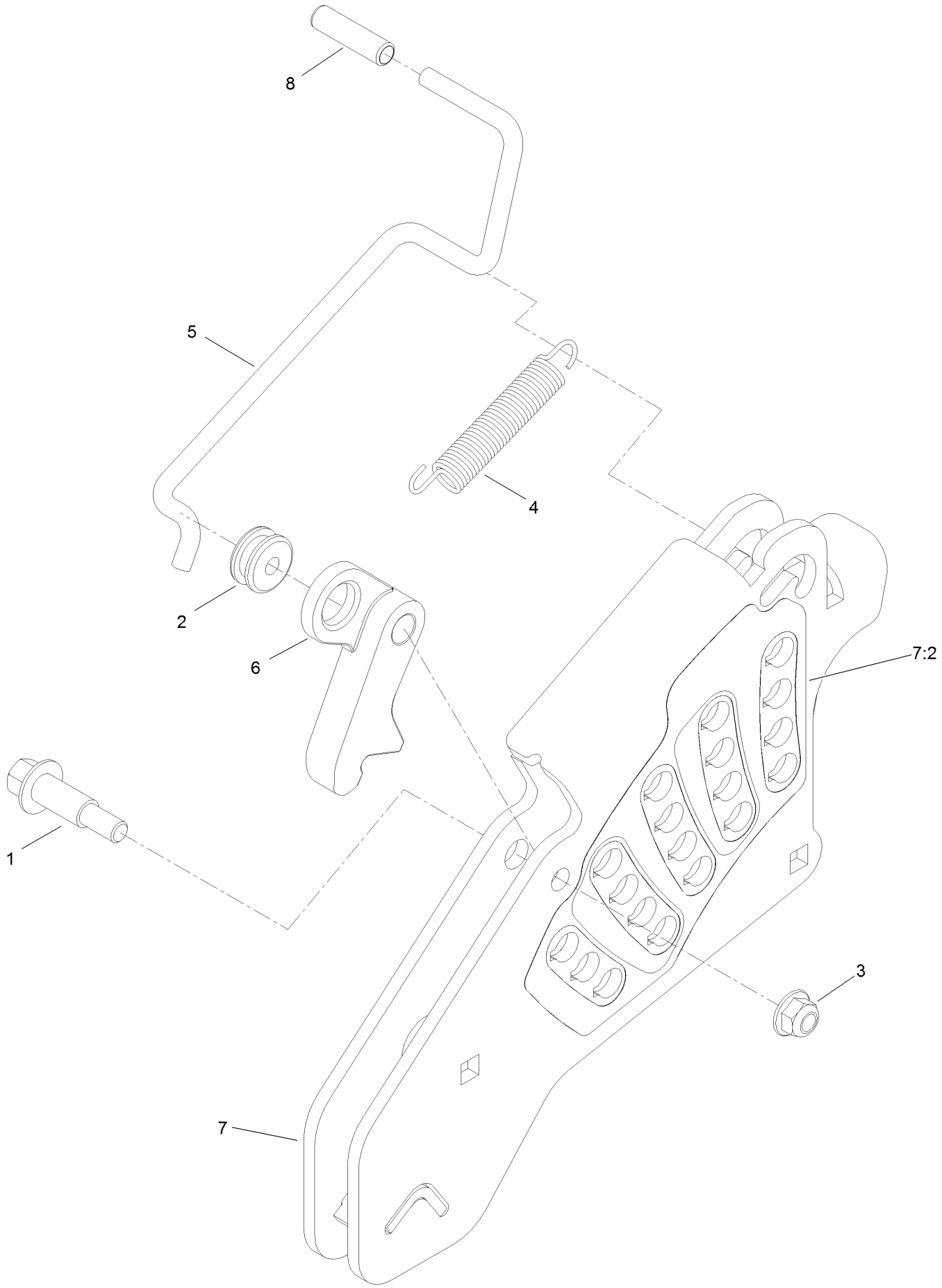

Height-of-Cut Assembly No. 109-7438 (continued)

Ref.	Part Number	Qty.	Description
1	62-1330	1	Bolt-Shoulder
2	109-7130	1	Grommet
3	104-8301	1	Nut-Flange, NI
4	109-7124	1	Spring-Extension
5	109-7128	1	Rod-Lock, Transport
6	116-0118	1	Pawl-Transport, HOC
7	109-7335	1	HOC Plate ASM
7:2	126-4398	1	Decal-HOC
8	109-8250	1	Grip-Lever

Control Assembly

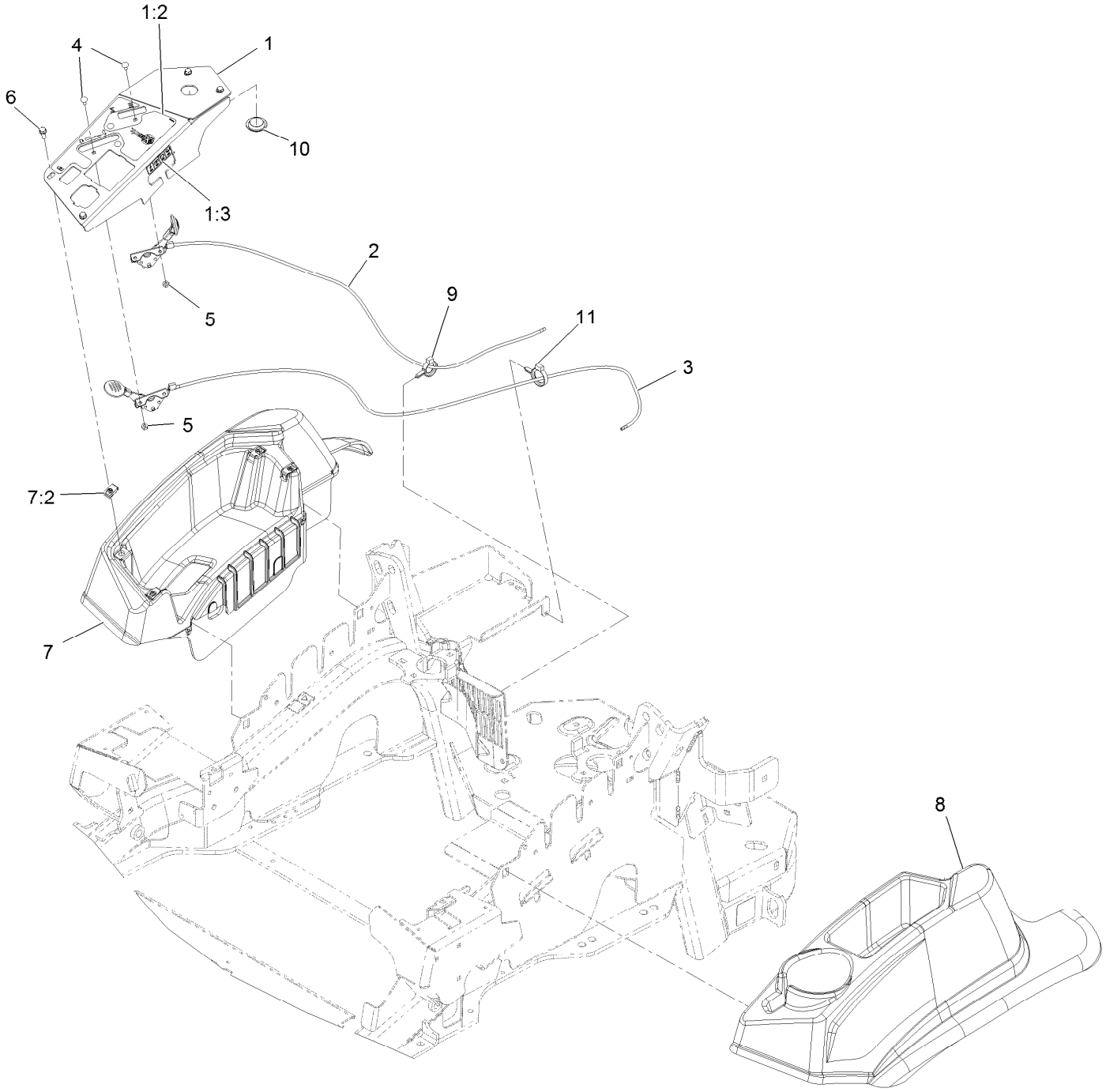

Control Assembly (continued)

Ref.	Part Number	Qty.	Description
1	116-1845	1	ASM,Console Panel W/Decal
1:2	116-8724	1	Decal-Control Panel Non-Efi
1:3	114-4466	1	Decal-Fuses
2	109-8165	1	ASM, Choke Cable
3	116-0969	1	ASM,Throttle Cable
4	1-807513	4	Bolt-Carriage #10-24 X 1/2
5	3296-2	4	Nut-Nyloc #10-24
6	32105-15	4	Screw-Machine 1/4-20 X 3/4
7	116-1278	1	Console,RH As ASM
7:2	107069	4	Nut-Retainer-Panel 1/4-20
8	109-9457	1	Console, LH As
9	105-1853	2	Clamp-Hose
10	116-1875	1	Plug,Plastic
11	104-2490	1	Clamp-Hose

Motion Control Assembly

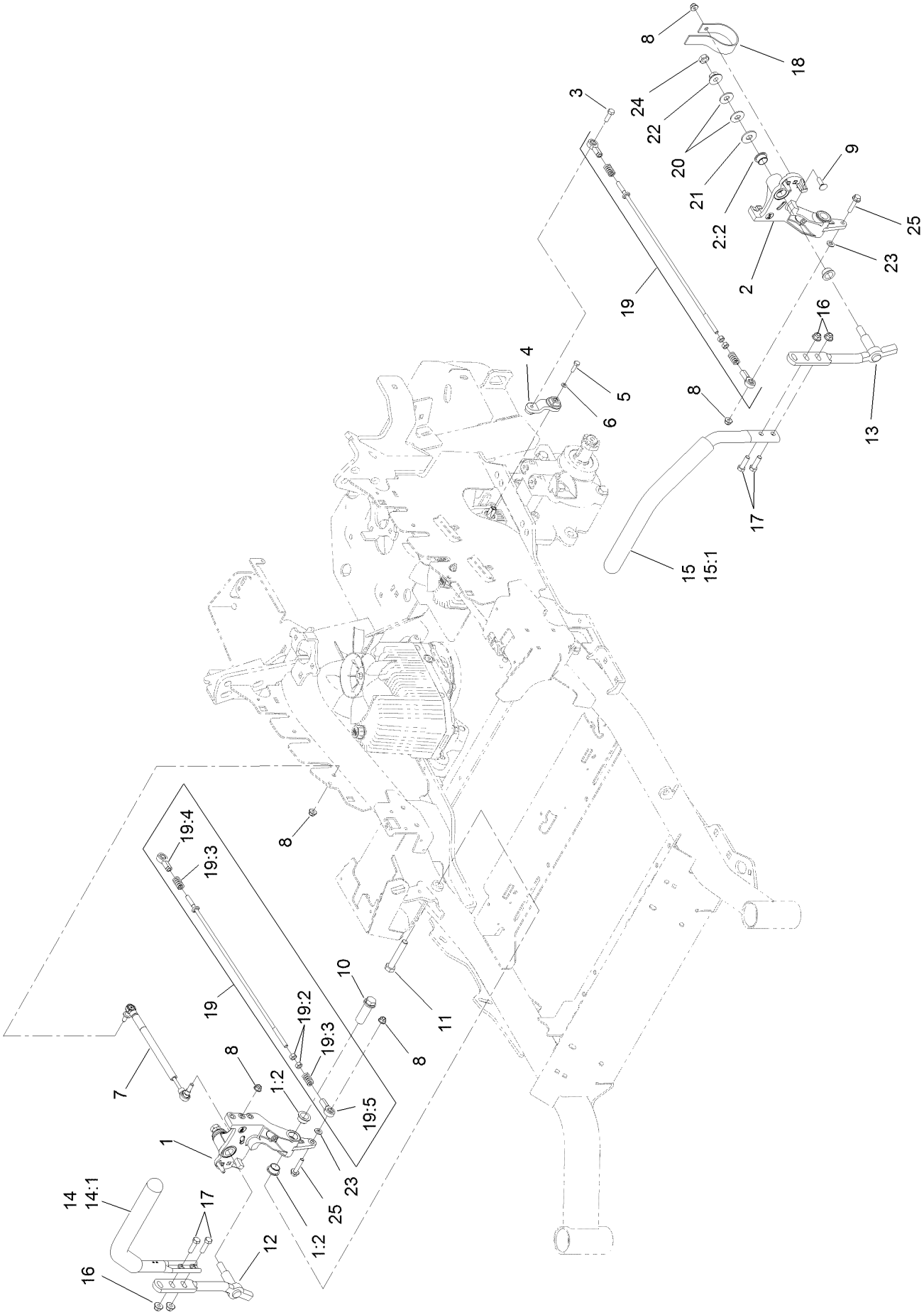

Motion Control Assembly (continued)

Ref.	Part Number	Qty.	Description
1	116-0880	1	RH Motion Control And Bushing ASM
1:2	109-8054	4	Bushing-Flange
2	116-0881	1	LH Motion Control And Bushing ASM
2:2	109-8054	4	Bushing-Flange
3	116-0648	2	Screw-HH, Thread Locking ●
4	109-4581	2	Arm-Control, Pump
5	9080046	2	Screw-HH ●
6	1-303435	2	Washer-Spring
7	116-0027	2	Damper-Control, Motion
8	104-8300	8	Nut-Flange, NI
9	3230-2	2	Bolt-CARR
10	109-5891	2	Hub-Threaded
11	325-12	2	Screw-HH
12	116-0039	1	Lever-Control Motion, RH
13	116-0040	1	Lever-Control Motion, LH

Ref.	Part Number	Qty.	Description
14	109-6589	1	RH Steering Handle ASM
14:1	109-5668	1	Grip-Control, Lever
15	109-6590	1	LH Steering Handle ASM
15:1	109-5668	1	Grip-Control, Lever
16	104-8301	4	Nut-Flange, NI
17	323-7	4	Screw-HH
18	109-5575	2	Spring-Leaf
19	109-8107	2	Pump Linkage Rear ASM
19:2	3219-2	2	Nut-Hex
19:3	1-323245	2	Spring-Compression
19:4	1-633152	1	Balljoint-LH
19:5	1-543017	1	Balljoint-RH
20	109-9505	4	Washer-Spring
21	3256-6	2	Washer-Flat
22	32128-56	2	Nut-HF
23	3256-23	2	Washer-Flat
24	3218-5	2	Nut-Jam
25	115-1794	2	Screw-HHF

● Use Pro-Lock, Nut Type (P/N 1-840022, .5ml tube) on threads.

Rear Wheel Assembly

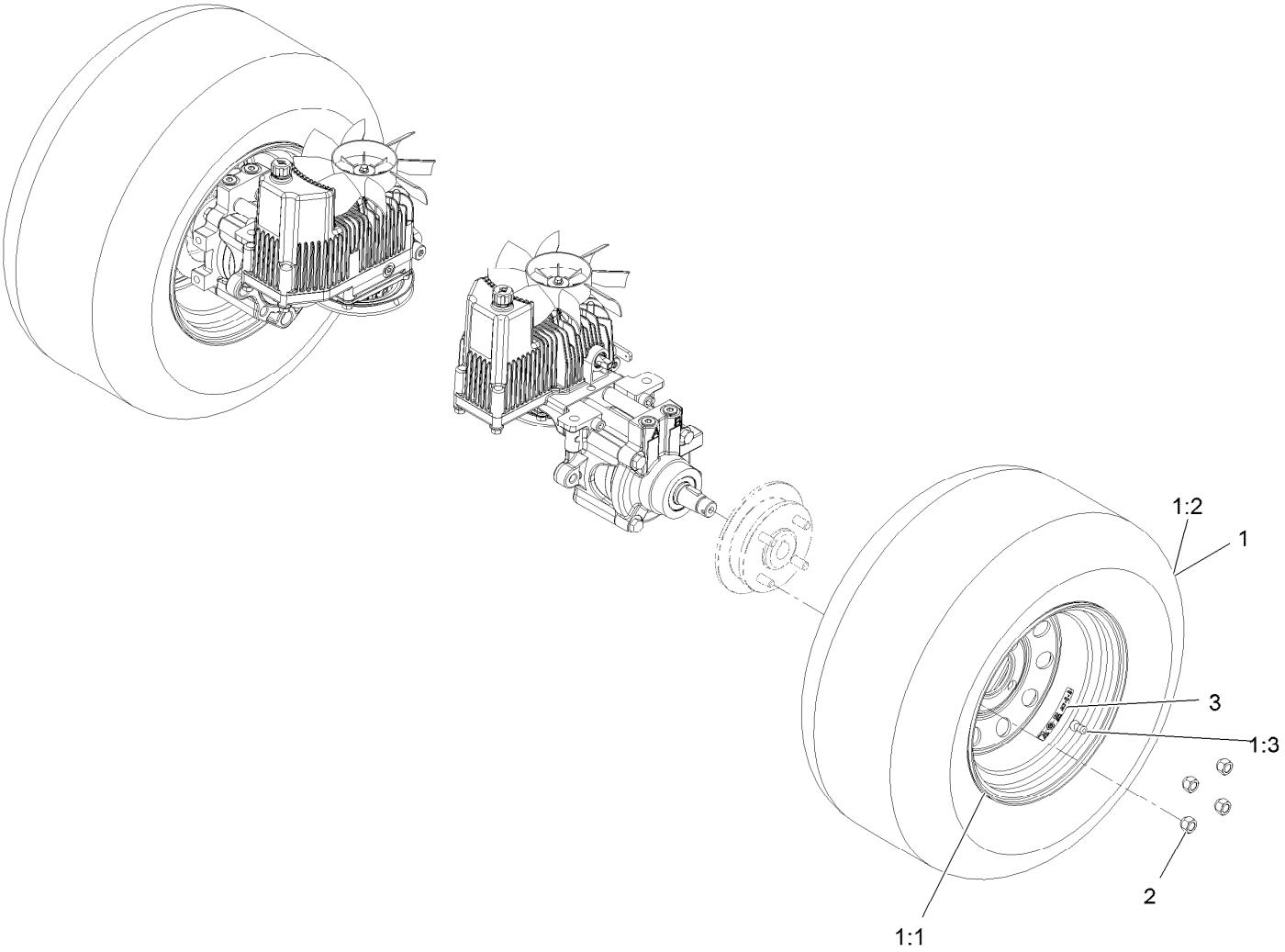

Rear Wheel Assembly (continued)

Ref.	Part Number	Qty.	Description
1	116-8294	2	ASM-Wheel And Tire
1:1	116-8295	1	ASM-Rim 60
1:2	116-8296	1	Tire-Drive
1:3	232-27	1	Stem-Valve
2	242-50	8	Nut-Lug 1/2-20
3	126-2055	2	Decal-Torque, Wheel Hub Lug

Park Brake Assembly

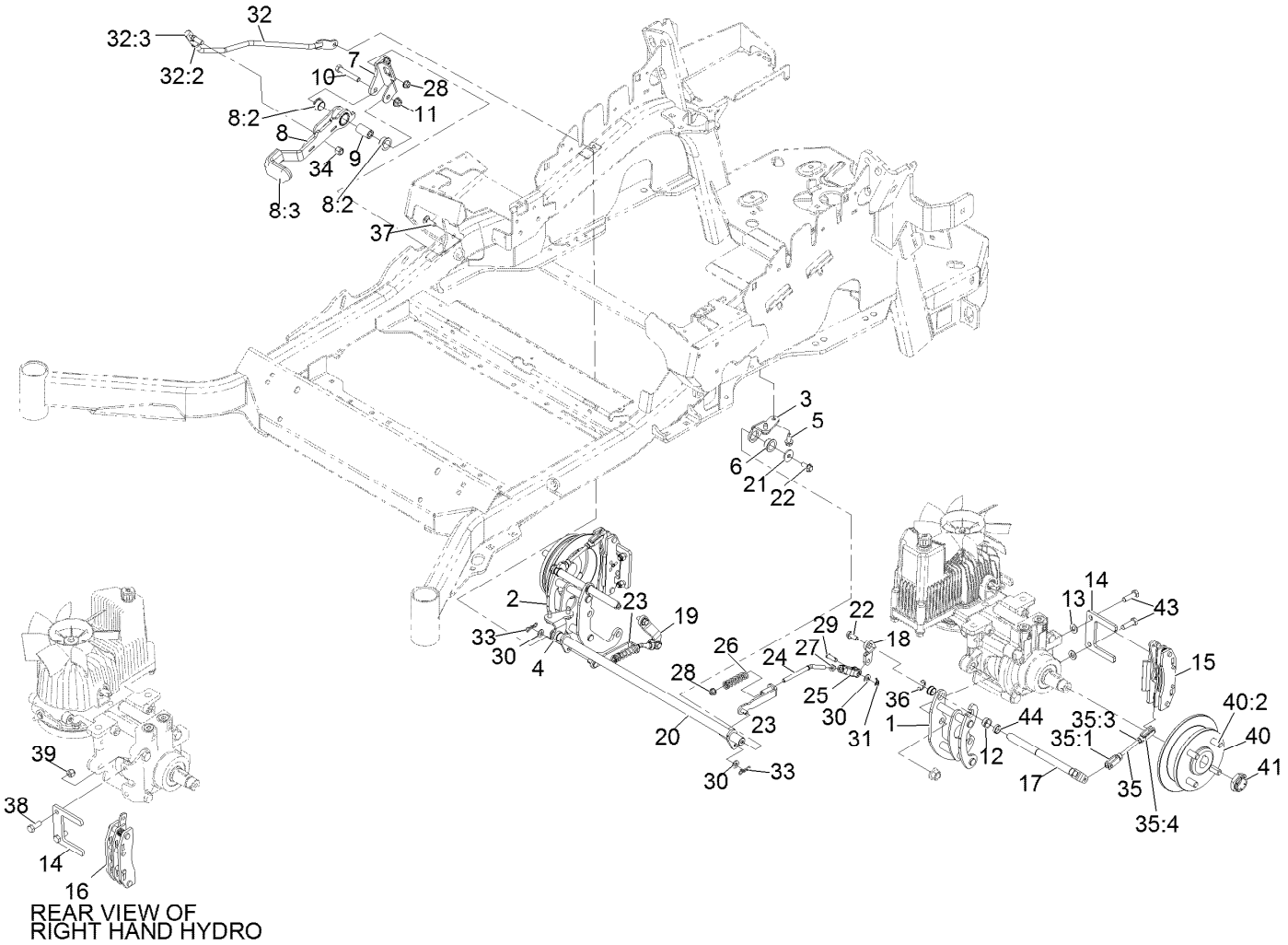

Park Brake Assembly (continued)

Ref.	Part Number	Qty.	Description
1	126-4248	1	Weld, Bellcrank Mount, Lt
2	126-4249	1	Weld, Bellcrank Mount, Rt
3	116-9681	1	Mount-Pivot, LH
4	116-9682	1	Mount-Pivot, RH
5	32144-70	4	Screw-HWH 5/16-18 X 3/4 Tf
6	109-8054	2	Bushing-Flanged
7	116-9096-01	1	Bracket-Mount
8	126-0970	1	Brake Lever ASM
8:2	109-8054	2	Bushing-Flanged
8:3	1-633268	1	Grip-Lever
9	116-9117	1	Handle-Pivot, Brake
10	323-11	1	Screw-HH 3/8-16 X 2 1/4
11	104-8301	1	Nut-Nyloc 3/8-16 Flg
12	126-6199	4	Bushing-Igus
13	3256-24	2	Washer-3/8 Sae
14	109-0958	2	Plate-Mount, Brake
15	109-2889	1	Caliper-Brake
16	116-9103	1	Caliper-Brake, RH
17	126-4251	2	Bellcrank
18	126-3715	1	Arm-Inner, LH
19	126-3716	1	Arm-Inner, RH
20	116-9080	1	Shaft-Cross
21	115-7109	2	Washer-Flat
22	98-9940	4	Screw
23	116-9608	2	Bracket-L
24	116-9086	2	Linkage-Mid
25	126-3693	2	Yoke-Offset
26	116-9085	2	Spring-Compression
27	3220-2	2	Nut-Jam 5/16-24
28	104-8300	4	Nut-Nyloc 5/16-18 Flg
29	1-808280	2	Pin-Clevis 5/16 X 1 49/64
30	3256-23	4	Washer-5/16 Sae
31	116-6639	2	Pin-Cotter, Locking
32	116-9102	1	Front Linkage ASM
32:2	94-7572	1	End-Tie Rod, RH
32:3	3220-3	1	Nut-Jam 3/8-24
33	119-1415	2	Pin-Cotter, Locking
34	3296-6	1	Nut-Nyloc 3/8-24
35	116-9071	2	Rear Linkage ASM
35:1	116-9070	2	Yoke
35:3	3220-1	1	Nut-Jam 1/4-28
35:4	126-6395	2	Pin-Clevis, Spring
36	32120-19	2	E-Ring
37	3230-2	2	Bolt-Carriage 5/16-18 X 1
38	323-6	2	Screw-HH 3/8-16 X 1
39	3296-39	2	Nut-Nyloc 3/8-16
40	116-1746	2	Wheel Hub ASM
40:2	116-1696	4	Stud-Wheel
41	116-1399	2	Locknut
43	92-5727	2	Screw-HH 3/8-16 X 1 1/4 Patch Lock
44	126-6200	2	Spacer

Seat Assembly

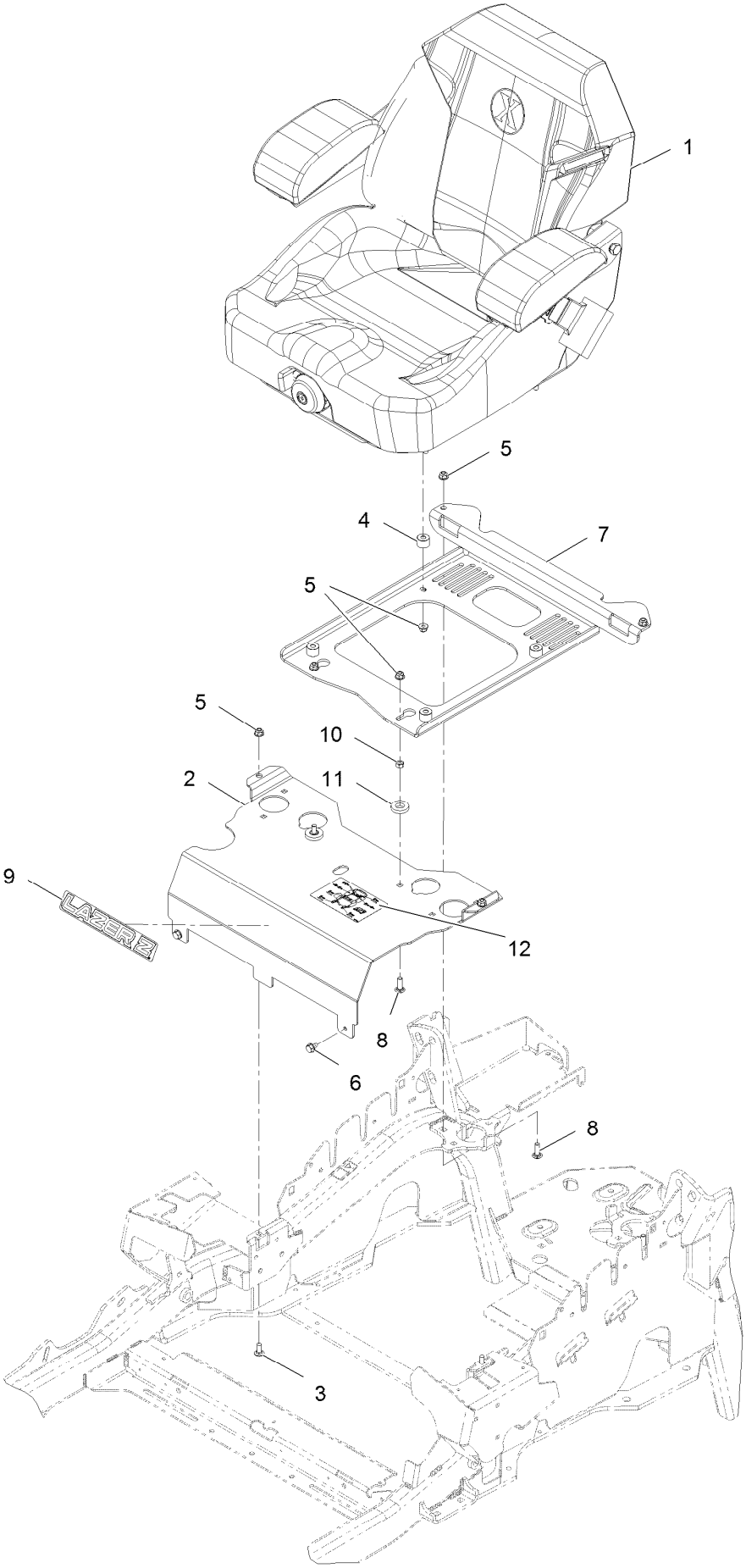

Seat Assembly (continued)

Ref.	Part Number	Qty.	Description
1	116-8912	1	Kit-Suspension Seat
2	116-2323	1	Mount-Seat
3	3230-23	2	Bolt-Carriage 5/16-18 X 3/4 Short Neck
4	116-9329	4	Spacer
5	104-8300	10	Nut-Nyloc 5/16-18 Flg
6	9266934	2	Screw-HWH 5/16 X 1/2 Tf
7	116-0192-03	1	Plate-Support, Seat
8	3230-22	4	Bolt-Carriage 5/16-18 X 1 Sp
9	126-6574	1	Decal, Lazer Model
10	3217-6	2	Nut-Hex 5/16-18
11	1-323539	2	Spacer-Blade Drive
12	114-4465	1	Decal-Service Aid

Seat W/Tracks Assembly No. 116-8912

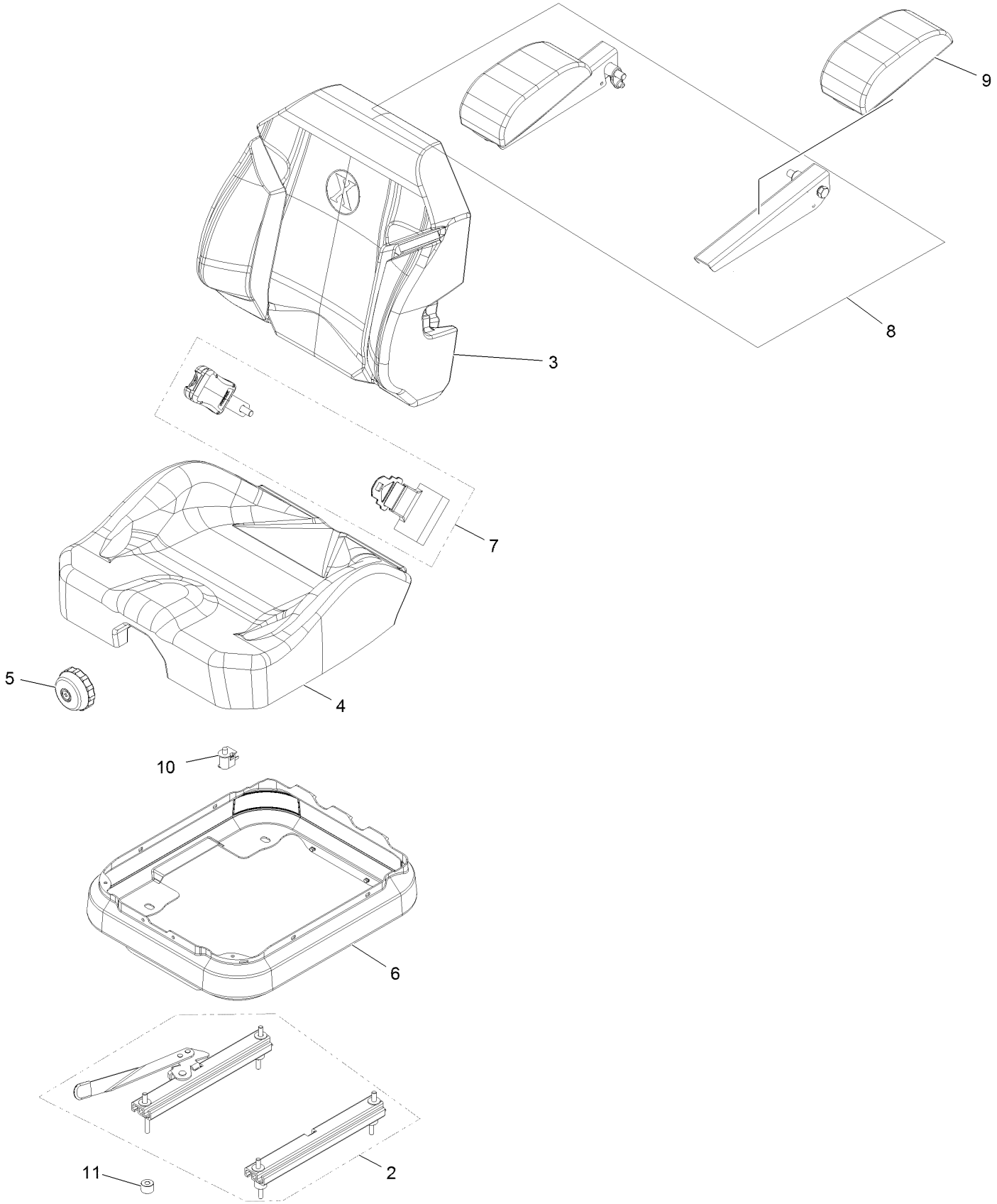

Seat W/Tracks Assembly No. 116-8912 (continued)

Ref.	Part Number	Qty.	Description
2	116-8910	1	Seat Track Set
3	116-8908	1	Cover-Back 311463Vn500
4	116-8909	1	Cover-Cushion 311464Vn500
5	116-8911	1	Knob-Adjuster
6	116-5659	1	Cover-Suspension Bellows
7	126-2061	1	Seat Belt Service Kit
8	116-8906	1	Kit-Arm Rest Set
9	116-8905	1	Kit-Arm Rest Pads
10	82-2190	1	Switch-Bail
11	116-9329	4	Spacer

Fuel Tank Assembly

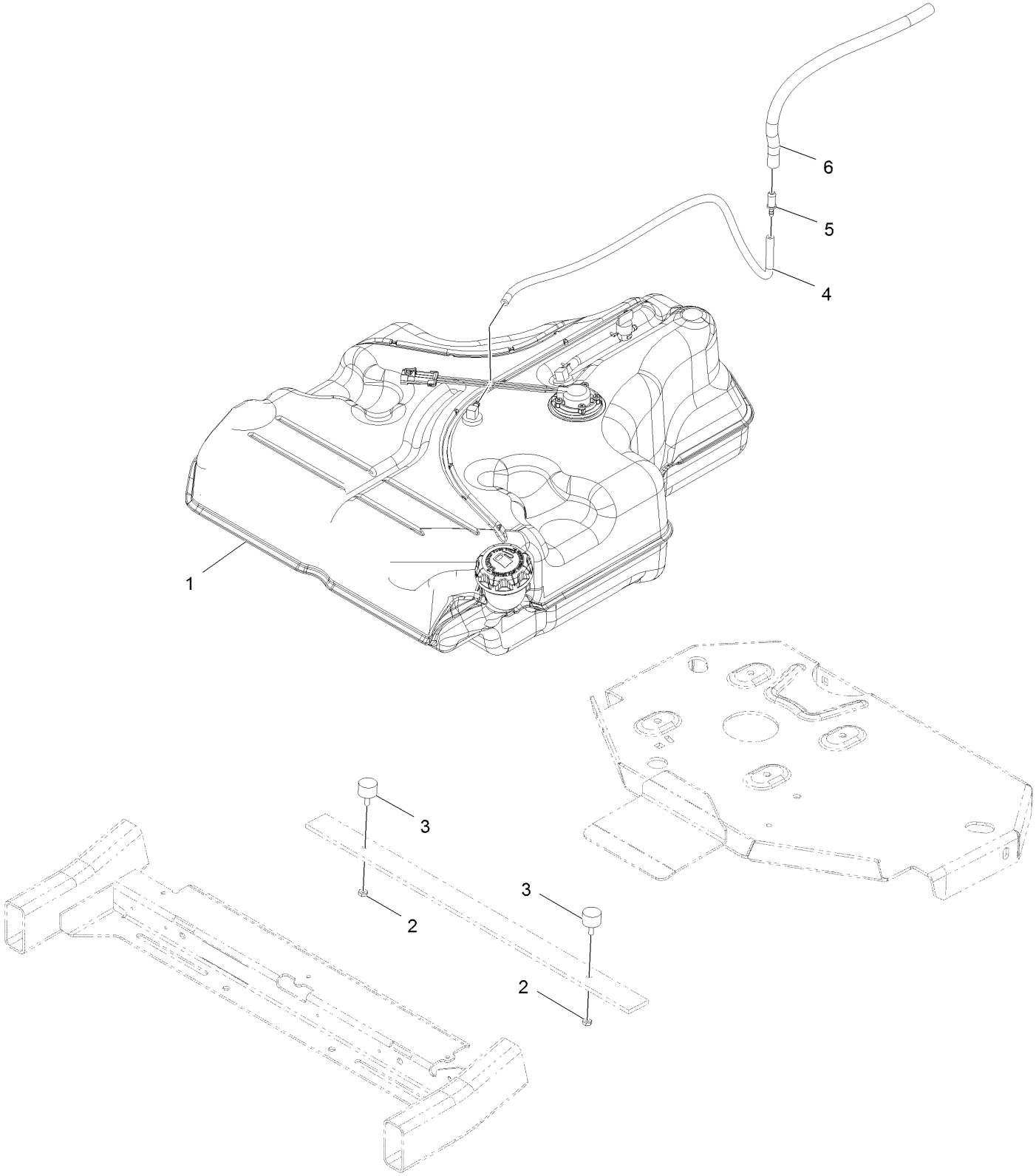

Fuel Tank Assembly (continued)

Ref.	Part Number	Qty.	Description
1	116-3978	1	Fuel Tank ASM
2	3218-1	2	Nut-Jam
3	116-6380	2	Bumper-Rubber (W/ Stud)
4	117-9569	1	Hose-Fuel
5	98-2952	1	Fitting-Straight
6	116-4344	1	Hose-Fuel

Fuel Tank Assembly No. 116-3978

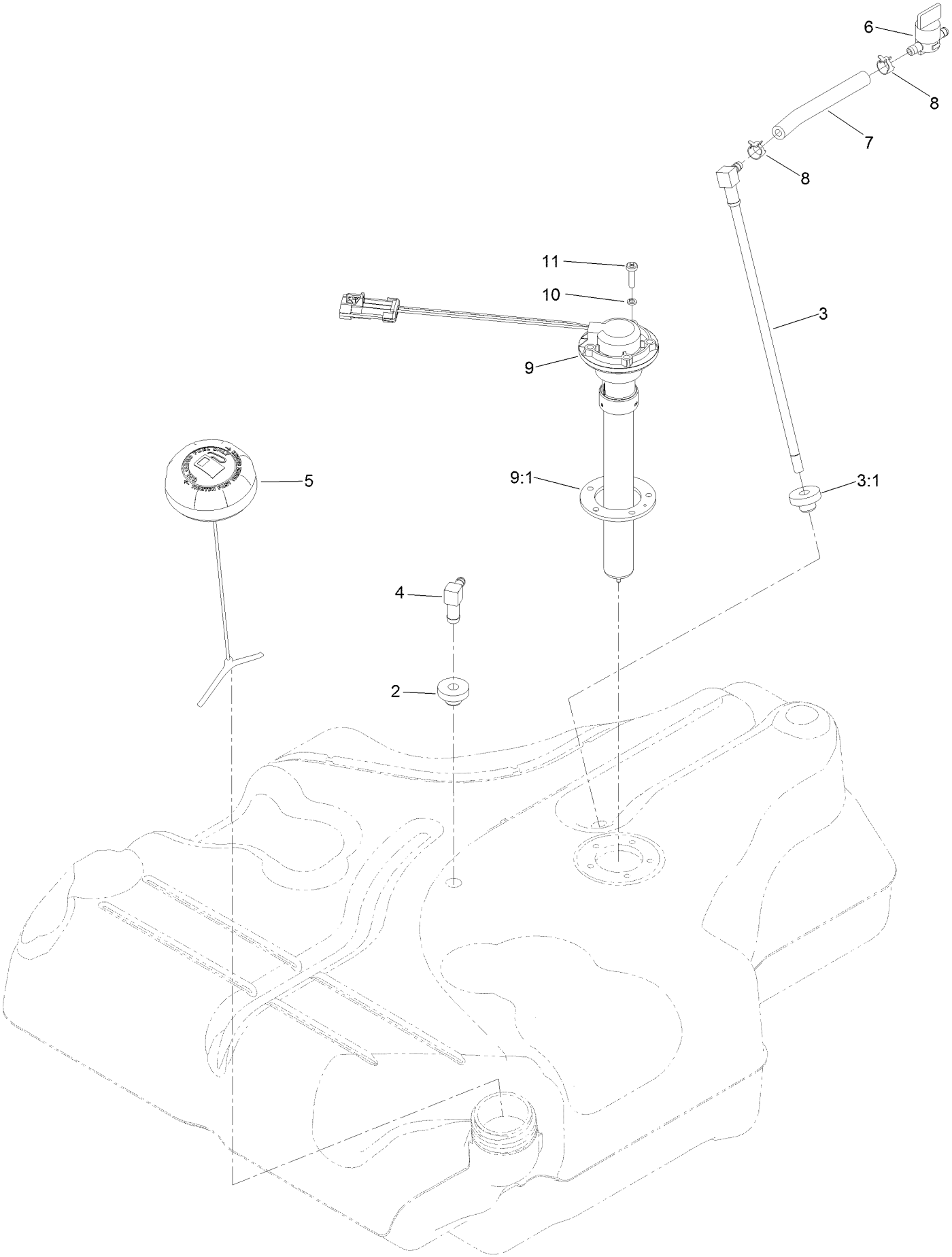

Fuel Tank Assembly No. 116-3978 (continued)

Ref.	Part Number	Qty.	Description
2	46-6560	2	Bushing
3	116-2459	1	Fuel Line Kit (With Grommet)
3:1	46-6560	1	Bushing
4	116-2288	1	Fitting-90 Elbow
5	126-1789	1	Cap-Fuel, Ratcheting
6	1-603770	1	Valve-Fuel
7	109-0650	1	Hose-Fuel
8	2412-98	2	Clamp-Hose
9	116-1981	1	Sender-Fuel
9:1	109-9620	1	Gasket-Sender, Fuel
10	3253-17	5	Washer-Lock
11	9107944	5	Screw-Pan

Engine Assembly

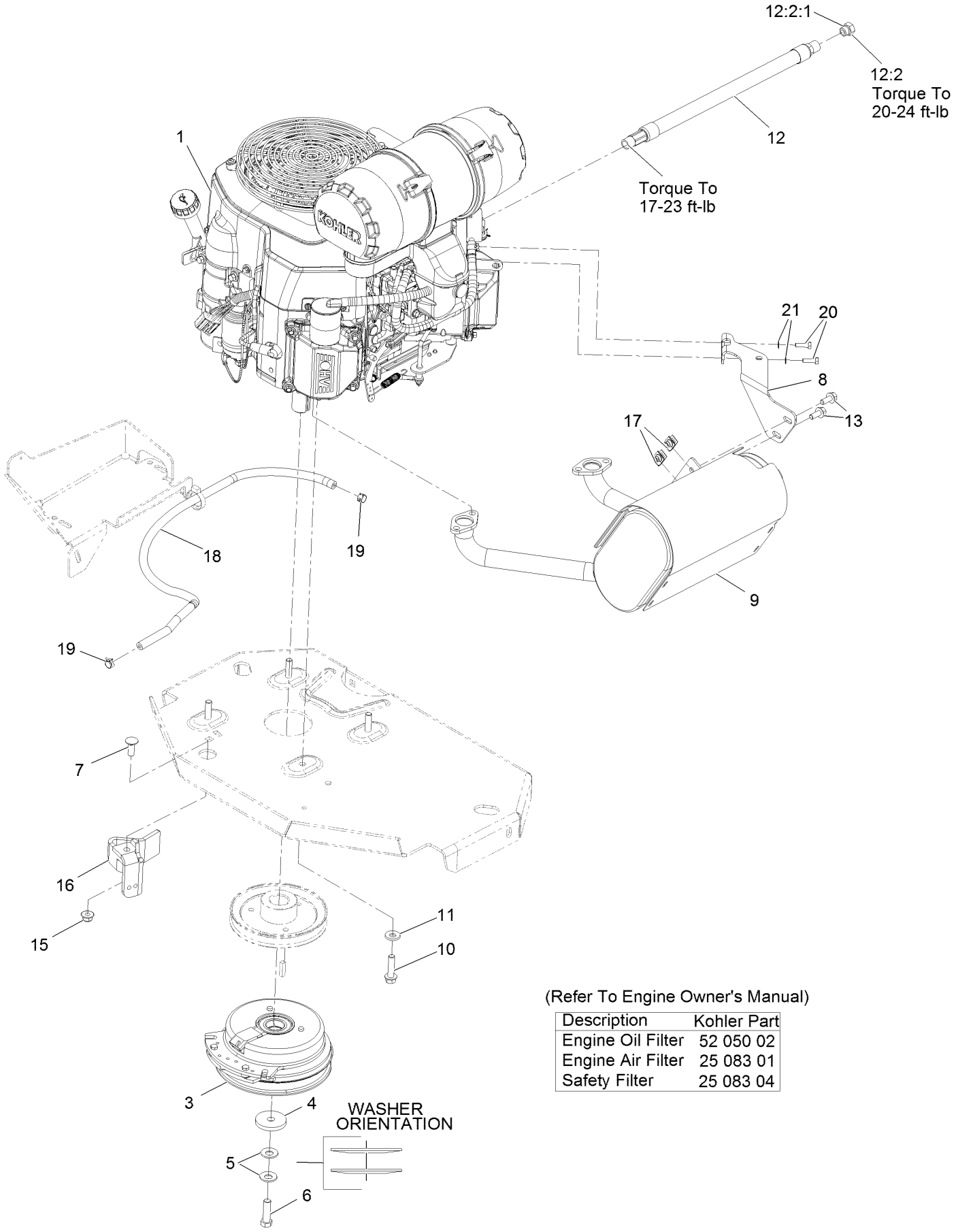

(Refer To Engine Owner's Manual)

Description	Kohler Part
Engine Oil Filter	52 050 02
Engine Air Filter	25 083 01
Safety Filter	25 083 04

Engine Assembly (continued)

Ref.	Part Number	Qty.	Description
1		1	Engine-Kohler, Cv742-3014 ●■
3	116-1620	1	Clutch Kit
4	109-6919	1	Washer-Clutch
5	1-603610	2	Washer-Spring Disc 7/16
6	109-9761	1	Screw-HH 7/16-20 X 1 1/2 W/Loctite ▲
7	3231-22	1	Bolt-Carriage 3/8-16 X 1
8	116-4297	1	Muffler Bracket Kit
9	116-1713	1	Muffler
10	32144-102	4	Screw-HWH 3/8-16 X 1 1/2 Taptite
11	98-5975	4	Washer-Spring Disc 3/8
12	116-5316	1	Oil Drain Hose ASM
12:2	353-508	1	Plug-W/O-Ring
12:2:1	237-42	1	O-Ring
13	3234-5	2	Screw-HH Flg 5/16-18 X 3/4
15	104-8301	1	Nut-Nyloc 3/8-16 Flg
16	116-2612-01	1	Clutch-Anchor
17	94-2413	2	Nut-U
18	109-0286	1	Hose-Fuel Line 35"
19	2412-98	2	Clamp-Hose
20	116-4295	2	Screw-HH M6-1 X 20Mm W/Patch
21	1-303435	2	Washer-Spring Disc 1/4

● Not serviced separately
▲ Use Pro-Lock, Nut Type (P/N 1-840022, .5ml tube) on threads.
■ Obtain parts from www.kohlerplus.com

Hydraulic Assembly

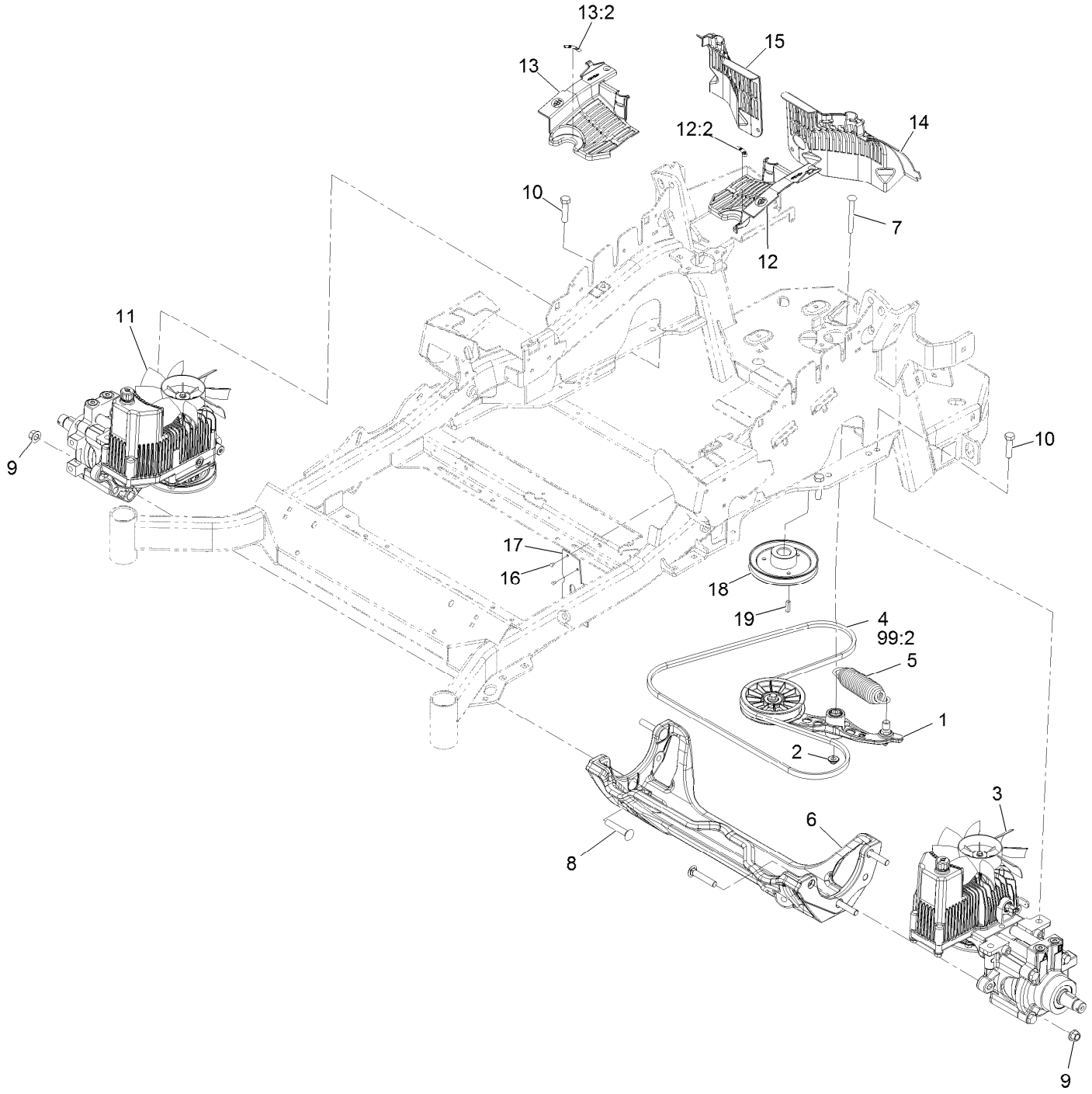

Hydraulic Assembly (continued)

Ref.	Part Number	Qty.	Description
1	116-1255	1	Pump Idler ASM
2	109-6658	1	Nut-Nyloc 3/8-16 Flg
3	126-1323	1	LH Hydro ASM (12Cc W/ Shock)
4	109-3388	1	Belt
5	116-6317	1	Spring-Extension
6	116-7558	1	Cradle-Hydro
7	116-1502	1	Bolt-Carriage Shoulder 3/8-16 X 3 1/2
8	126-0095	6	Screw-CARR
9	99-5107	6	Nut-Lock 1/2-13
10	325-8	4	Screw-HH 1/2-13 X 1 1/4
11	126-1324	1	RH Hydro ASM (12Cc W/ Shock)
12	116-0170	1	LH Hydro Guard ASM
12:2	116-8726	1	Decal-Oil, Hydro

Ref.	Part Number	Qty.	Description
13	116-0171	1	RH Hydro Guard ASM
13:2	116-8726	1	Decal-Oil, Hydro
14	109-9057	1	Guard-Hydro, Rear (LH)
15	109-9058	1	Guard-Hydro, Rear (RH)
16	1-803035	2	Rivet 3/16 X 1/4
17	116-2362	1	Deflector-Air Flow
18	109-9905	1	Sheave
19	1-807259	1	Key-Machine 1/4 X 1/4 X 1
99	109-9828	1	Bottle-Oil, 32Oz Hydraulic ●
99	116-0164	1	Filter-Hydro ●
99	116-1218	1	Bottle,Oil 1 Gallon Hydraulic ●
99	116-3270	1	Kit, Hydro Service ●
99:1	109-9828	4	Bottle-Oil, 32Oz Hydraulic ●
99:2	109-3388	1	Belt
99:3	116-0164	2	Filter-Hydro ●

● Not illustrated

LH Hydro Assembly No. 126-1323

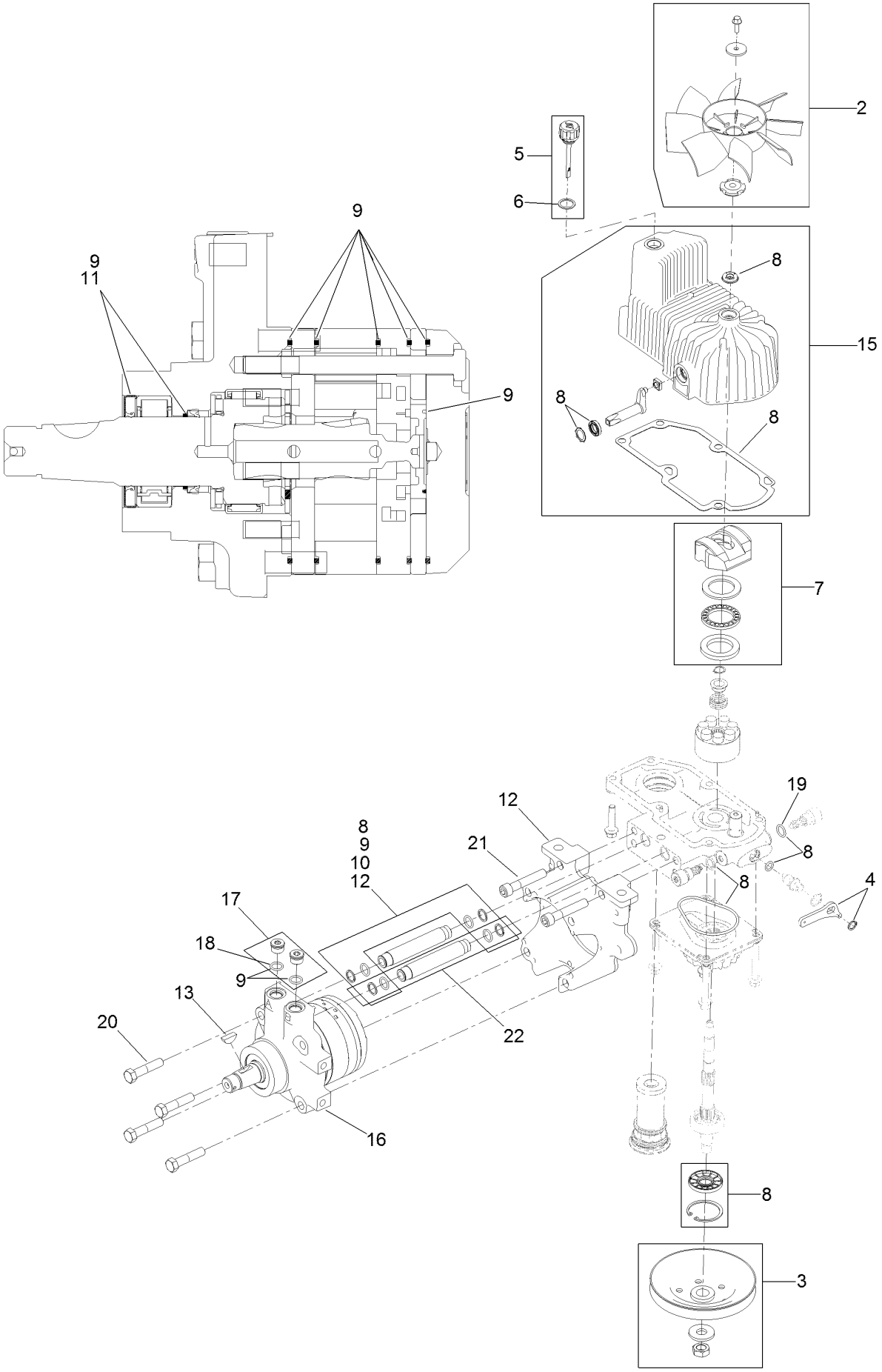

LH Hydro Assembly No. 126-1323 (continued)

Ref.	Part Number	Qty.	Description
2	116-0233	1	Fan Kit
3	116-0234	1	Pulley Kit
4	116-0235	1	Handle-Bypass Valve, Hydro
5	116-0236	1	Dipstick-Hydro W/Gasket
6	116-0237	1	Gasket-Dipstick, Hydro
7	116-1367	1	Swash Block Kit
8	116-1368	1	Pump Seal Kit
9	116-1369	1	Motor Seal Kit
10	116-1370	1	Tube Seal Kit
11	116-1371	1	Output Shaft Seal Kit
12	116-5469	1	Nose Cup-Uht
13	3257-42	1	Key-Woodruff
15	116-3287	1	Housing-LH
16	116-8915	1	Motor-Hydraulic LH 240Cc
17	116-7901	1	Magnetic Plugs Service Kit
18	76-1900	2	O-Ring
19	116-8662	2	O-Ring-Check Valve
20	116-8974	4	Screw HH
21	116-8975	2	Screw-HSH
22	116-9922	2	Hydraulic Tube Kit
99	116-1373	1	Flow Test Kit ●

● Not illustrated

RH Hydro Assembly No. 126-1324

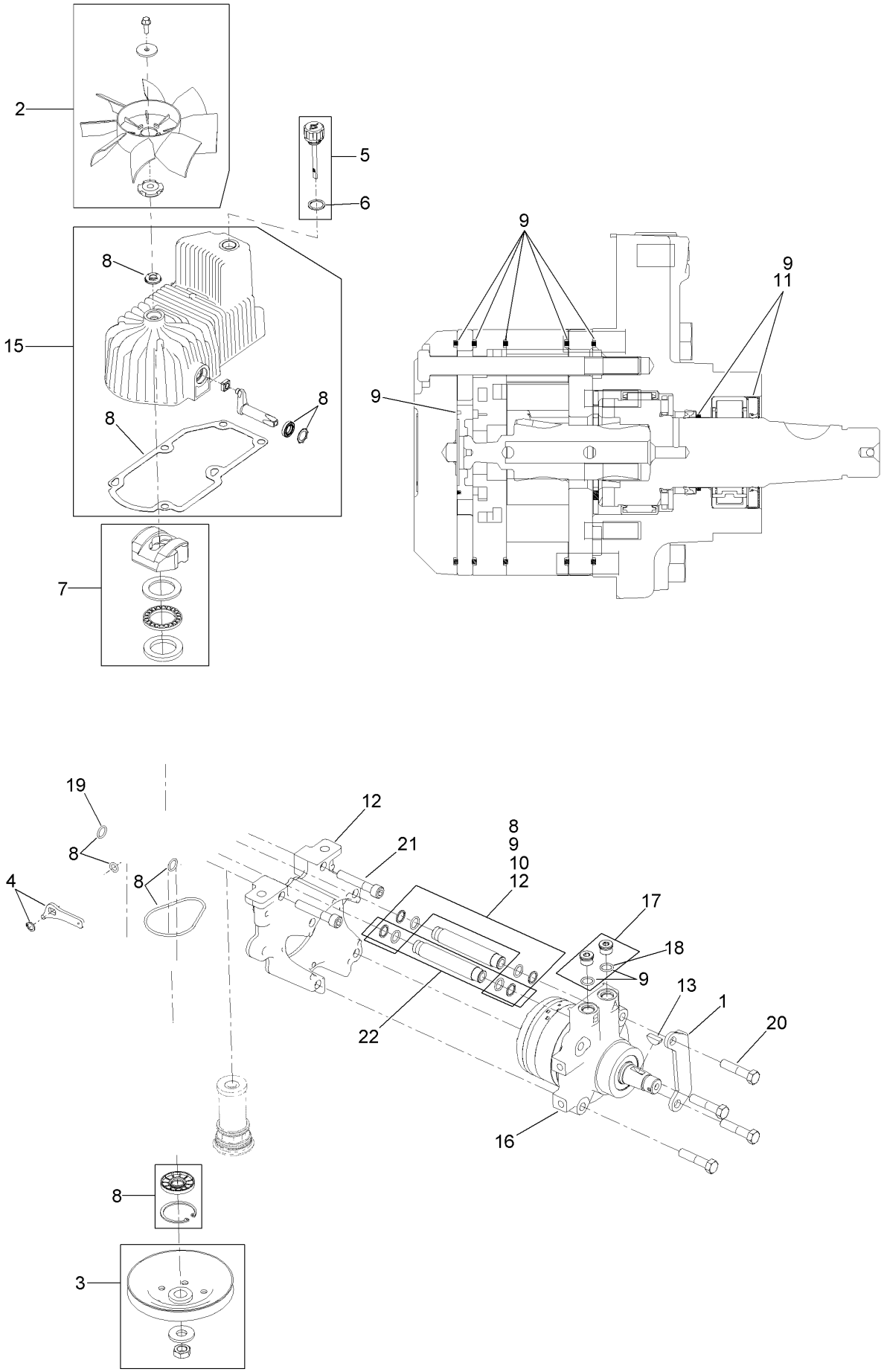

RH Hydro Assembly No. 126-1324 (continued)

Ref.	Part Number	Qty.	Description
1	116-9063	1	Mount-Shoe, Horse
2	116-0233	1	Fan Kit
3	116-0234	1	Pulley Kit
4	116-0235	1	Handle-Bypass Valve, Hydro
5	116-0236	1	Dipstick-Hydro W/Gasket
6	116-0237	1	Gasket-Dipstick, Hydro
7	116-1367	1	Swash Block Kit
8	116-1368	1	Pump Seal Kit
9	116-1369	1	Motor Seal Kit
10	116-1370	1	Tube Seal Kit
11	116-1371	1	Output Shaft Seal Kit
12	116-5469	1	Nose Cup-Uht
13	3257-42	1	Key-Woodruff
15	116-3288	1	Housing-RH
16	116-8916	1	Motor-Hydraulic RH 240Cc
17	116-7901	1	Magnetic Plugs Service Kit
18	76-1900	2	O-Ring
19	116-8662	2	O-Ring-Check Valve
20	116-8974	4	Screw HH
21	116-8975	2	Screw-HSH
22	116-9922	2	Hydraulic Tube Kit
99	116-1373	1	Flow Test Kit ●

● Not illustrated

Pump Idler Assembly No. 116-1255

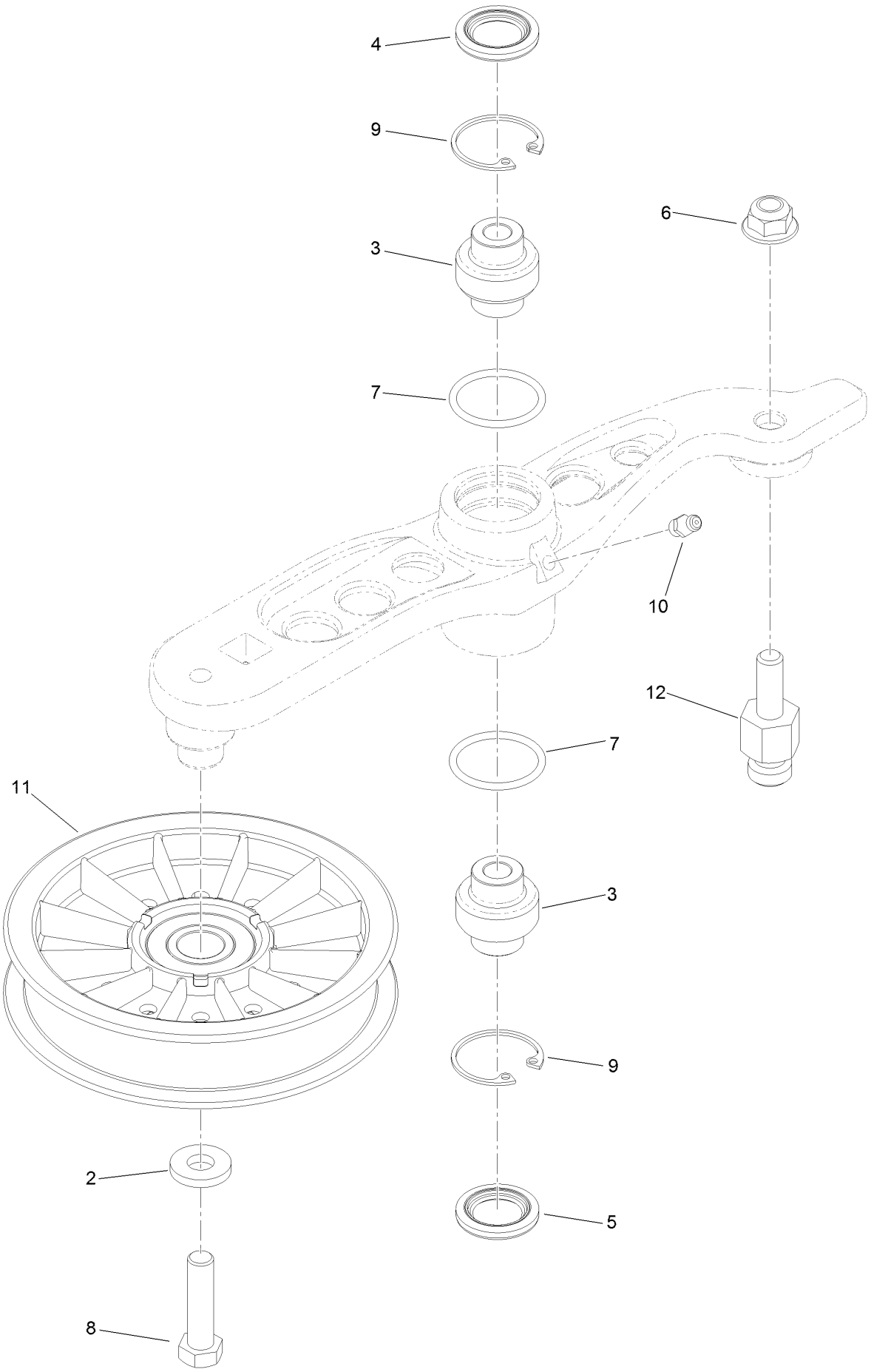

Pump Idler Assembly No. 116-1255 (continued)

Ref.	Part Number	Qty.	Description
2	43-0940	1	Spacer
3	103-3504	2	Bearing-Spherical
4	103-3505	1	Seal-Double Lip
5	103-3506	1	Seal-Lip, Single
6	109-6658	1	Nut-Flange, NI
7	106-7159	2	O-Ring
8	323-8	1	Screw-HH
9	32120-10	2	Ring-Snap
10	302-19	1	Fitting-Grease
11	109-8076	1	Pulley-Idler
12	116-3467	1	Pin-Spring, Anchor

Electrical Assembly

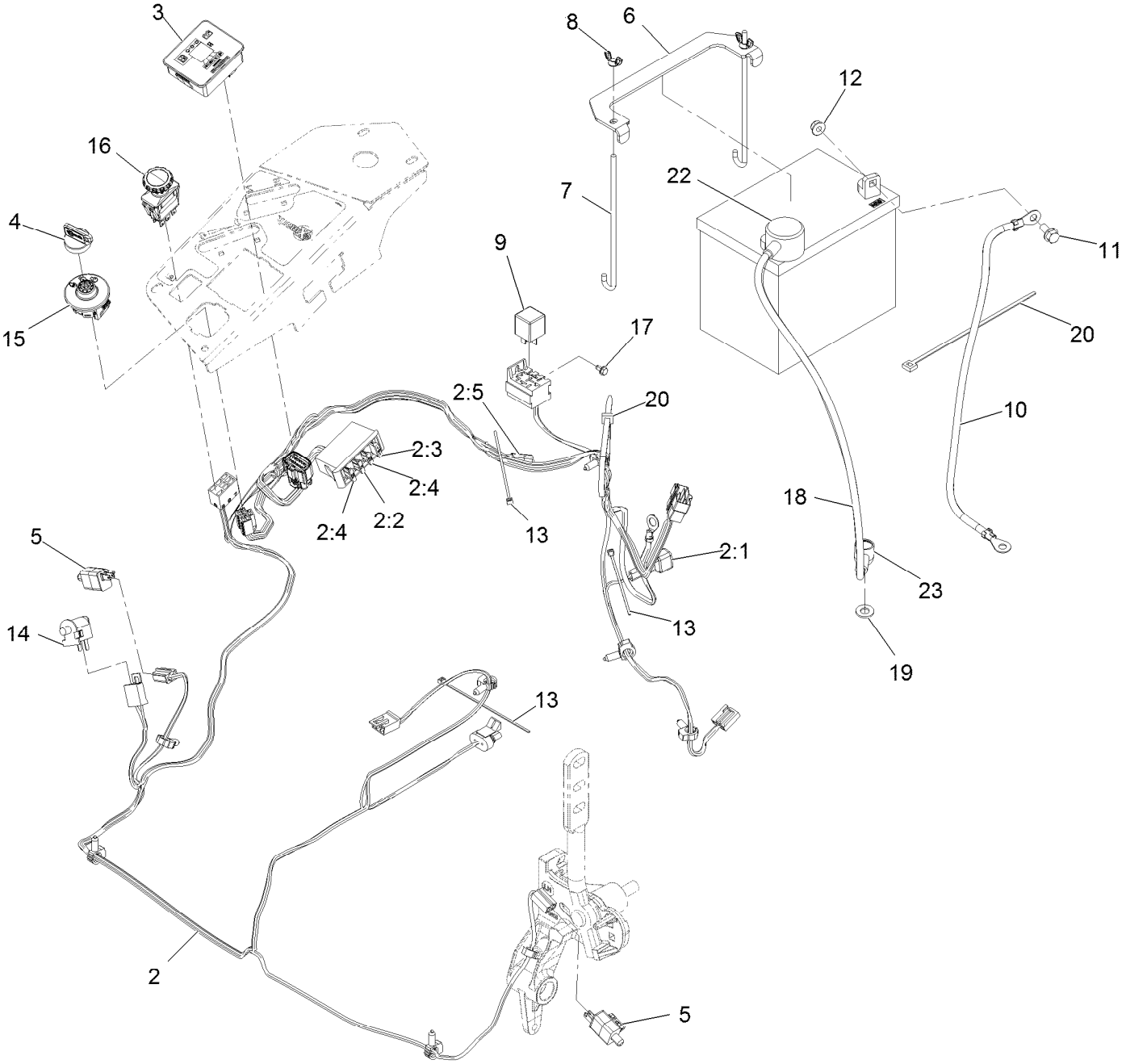

Electrical Assembly (continued)

Ref.	Part Number	Qty.	Description
2	116-6009	1	Harness-Wire, Main ●
2:1	103-3895	1	Diode
2:2	218-578	1	Fuse-Blade, 10 Amp
2:3	109355	1	Fuse-Blade, 15 Amp
2:4	109102	2	Fuse-Blade, 25 Amp
2:5	116-0053	1	Cap-Plug
3	117-3882	1	Fuel/Hour Meter ASM
4	1-603511	1	Key-Ignition
4	103-2106	1	Key-Exmark Logo
5	110-6765	2	Switch
6	116-0042-03	1	Strap-Tie Down, Battery
7	1-633651	2	Bolt-Holddown
8	1-543792	2	Wingnut-Nyloc 1/4-20
9	1-643275	1	Relay-12Vdc 40 Amp
10	114-1218	1	Cable-Battery, Negative
11	3234-5	2	Screw-HH Flg 5/16-18 X 3/4
12	104-8300	2	Nut-Nyloc 5/16-18 Flg
13	1-303287	3	Tie-Cable 5 1/2 (Small)
14	82-2190	1	Switch
15	117-2221	1	Switch-Ignition
16	116-0124	1	Switch-PTO, 10A
17	104-2065	1	Screw-HWH #10-24 X 3/8
18	115-3864	1	Cable-Battery, Positive
19	3256-24	1	Washer-3/8 Sae
20	1-303335	2	Tie-Cable 7 15/16 (Large)
22	109-2407	1	Insulator-Battery
23	1-543393	1	Insulator-Solenoid

● Use dielectric grease on all unsealed connectors and terminals only. Do not apply in sealed connectors.

Notes:

Notes:

Notes:

MAXIMIZE THE PERFORMANCE OF YOUR EXMARK MACHINE.

EXMARK® PREMIUM ENGINE OIL

Exmark now offers a family of engine oil viscosities to perform well in any environment. Each viscosity has the same synthetic formulation to give you what you need in punishing conditions. We designed each grade to the highest quality, making it ideal even for diesel applications. Coupled with Exmark Premium Fuel Treatment, we have the performance products to make your machine hum.

EXMARK PREMIUM ENGINE OIL SAE 30/10W-30

- Meets zero shear requirements of a straight grade SAE 30 as well as the cold temp properties of a 10W-30.
- Most versatile oil in the industry.
- Superior corrosion protection over conventional oil - even in corrosive, humid environments.

EXMARK PREMIUM ENGINE OIL SAE 10W-50

- Full synthetic formulation gives you peak performance. Don't settle for less.
- Wide span multi-grade combines easy starting in cold weather with maximum protection in high temperature operation.
- Reduce friction & wear over standard mineral formulations.

EXMARK PREMIUM ENGINE OIL UTV FORMULATION

- 4-cycle high-temp formulation.
- Heavier viscosity, full synthetic, perfect for your UTV.

EXMARK PREMIUM ENGINE OIL SAE 20W-50

- Perfect for your big block engine, or any application in severe service.
- Same full synthetic formulation as all other Exmark Premium viscosities.
- Also effective for use in severe service small block engines.

EXMARK PREMIUM ENGINE OIL SAE 0W-40

- The perfect choice for when the weather turns cold or unpredictable, and your Exmark UTV has to perform.
- Commercial quality for severe service.
- Advanced additive package helps prevent corrosion from long-term storage.

EXMARK PREMIUM UTV EXTREME CONDITIONS GEAR OIL

- SAE 80W-90, designed to keep your UTV performing at its peak.
- Shear stable, hypoid gear lube.
- Includes a premium additive system to combat wear, oxidation, rust & corrosion.

Available from your local Exmark dealer. Find your closest dealer at exmark.com

EXMARK ACCESSORIES AND OPTIONS*

MID-MOUNT RIDING ACCESSORIES AND OPTIONS

CUSTOM RIDE SEAT SUSPENSION SYSTEM
FULL SUSPENSION SEAT
DECK LIFT ASSIST KIT
HITCH KIT
LIGHT KIT
12V POWER PORT
MICRO-MULCH SYSTEM
OPERATOR CONTROLLED DISCHARGE
SUN SHADE
TRASH CONTAINER
TURF STRIPER
ULTRA VAC COLLECTION SYSTEM
ULTRA VAC QUICK DISPOSAL SYSTEM

OUT-FRONT RIDING ACCESSORIES AND OPTIONS

CUSTOM RIDE SEAT SUSPENSION SYSTEM
DUAL-TAIL WHEEL
FLOOR PAN EXTENDER
HITCH KIT
LIGHT KIT
MICRO-MULCH SYSTEM
ROLL OVER PROTECTION SYSTEM (ROPS)
SNOW BLADE
SNOWBLOWER
SUN SHADE
TRASH CONTAINER
ULTRA VAC COLLECTION SYSTEM
ULTRA VAC QUICK DISPOSAL SYSTEM
WEATHER CAB

WALK-BEHIND ACCESSORIES AND OPTIONS

GRASS CATCHER
MICRO-MULCH SYSTEM
TURF STRIPER
STANDON

*Some accessories and options not available for some models.

Place Model No. and Serial No. Label Here (Included in the Literature Pack) or Fill in Below

Model No. _____

Serial No. _____

Date Purchased _____

Engine Model No. and Spec. No. _____

Engine Serial No. (E/No) _____

© 2015 Exmark Mfg. Co., Inc.
All Rights Reserved

Industrial Park Box 808
Beatrice, NE 68310
(402) 223-6300
Fax (402) 223-5489

Part No. 4502-686 Rev. A
Printed in the USA.

www.exmark.com