MODEL 3700
FRONT FOLD PLANTER

OPERATOR MANUAL

M0261-01 Rev. 7/19

This manual is applicable to: Model 3700 Forward Folding Planters
2015 Production and on

Record the model number and serial number of your planter along with date purchased:

Model Number 3700

Serial Number _____

Date Purchased _____

Monitor Serial Number _____

Measured Pulses Per Mile/Km (Radar Distance Sensor) _____

Measured Pulses Per Mile/ Km (Magnetic Distance Sensor) _____

SERIAL NUMBER

The serial number plate is located on the planter frame as shown below. The serial number provides important information about your planter and is needed to obtain correct replacement parts. Always provide model number and serial number to your Kinze Dealer when ordering parts or when contacting Kinze Manufacturing, Inc.

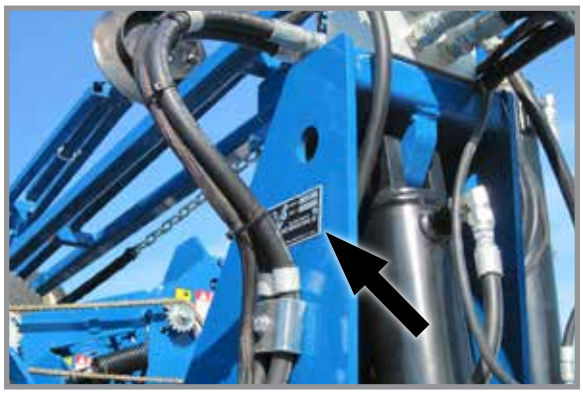

Serial number plate location - 2015 production

This page intentionally left blank.

TO THE DEALER

Predelivery service includes assembly, lubrication, adjustment and test. This service helps ensure planter is delivered to retail customer/end user ready for field use.

PREDELIVERY CHECKLIST

Use the following checklist after planter is completely assembled. Check off each item as it is found satisfactory or after proper adjustment is made.

- ❑ Row units properly spaced and optional attachments correctly assembled.
- ❑ Row marker assemblies installed and adjusted at each end of the planter.
- ❑ Vacuum and bulk fill components properly installed (as applicable).
- ❑ All grease fittings in place and lubricated.
- ❑ All working parts move freely, bolts are tight, and cotter pins are spread.
- ❑ Check all drive chains for proper tension and alignment.
- ❑ Check for oil leaks and proper hydraulic operation.
- ❑ Hydraulic hoses correctly routed to prevent damage.
- ❑ Inflate tires to specified air pressure and torque wheel lug bolts and lug nuts as specified in the Operator Manual.
- ❑ All safety decals correctly located and legible. Replace if damaged.
- ❑ All reflective decals and SMV sign correctly located and visible when the planter is in transport position.
- ❑ Safety/warning lights correctly installed and working properly.
- ❑ Paint all parts scratched during shipment or assembly.
- ❑ All safety lockup devices on the planter and correctly located.
- ❑ Auxiliary safety chain properly installed and hardware torqued to specification.
- ❑ Vacuum fan PTO-driven pump correctly attached to tractor. Oil reservoir filled to capacity and system inspected for leaks (If applicable).
- ❑ Control box properly installed in tractor. All cables correctly routed and secure.

Planter has been thoroughly checked and to the best of my knowledge is ready for delivery to the customer.

_____

(Signature of Set-Up Person/Dealer Name/Date)

OWNER REGISTER

Name _____ Delivery Date _____

Street Address _____ Model No. 3700 Serial No. _____

City, State/Province _____ Dealer Name _____

ZIP/Postal Code _____ Dealer No. _____

DELIVERY CHECKLIST

Use the following checklist at time planter is delivered as a reminder of very important information which should be conveyed to retail customer/end user. Check off each item as it is fully explained.

- ❑ Check proper operation of vacuum fan, bulk fill fan, and PTO-driven pump (If applicable) with tractor used with planter.
- ❑ Life expectancy of this or any other machine is dependent on regular lubrication as directed in the Operator Manual.
- ❑ All applicable safety precautions.
- ❑ Along with retail customer/end user, check reflective decals and SMV sign are clearly visible with planter in transport position and attached to tractor. Check safety/warning lights are in working condition. Tell retail customer/end user to check federal, state/provincial, and local regulations before towing or transporting on a road or highway.
- ❑ Give Operator Manual, Parts Manual, and all Instruction Sheets to retail customer/end user and explain all operating adjustments.
- ❑ Read warranty to retail customer/end user.
- ❑ Complete Warranty and Delivery Report form.

To the best of my knowledge this machine has been delivered ready for field use and customer has been fully informed as to proper care and operation.

_____

(Signature of Delivery Person/Dealer Name/Date)

AFTER DELIVERY CHECKLIST

The following is a list of items we suggest to check during the first season of use of the equipment.

- ❑ Check planter performance with retail customer/end user.
- ❑ Check performance of vacuum or mechanical seed metering system with retail customer/end user.
- ❑ Review importance of proper maintenance and adherence to all safety precautions with retail customer/end user.
- ❑ Check for parts that may need to be adjusted or replaced.
- ❑ Check all safety decals, reflective decals, and SMV sign are correctly located as shown in the Parts Manual and that decals are legible. Replace if damaged or missing.
- ❑ Check safety/warning lights are working properly.

_____

(Signature of Follow-Up Person/Dealer Name/Date)

All registrations must be submitted online at "business.kinze.com" within 5 business days of delivery. Retain a copy of this form for auditing purposes.

Tear Along Perforation

OVERVIEW

MACHINE OPERATION

ROW UNIT OPERATION

LUBRICATION AND MAINTENANCE

TROUBLESHOOTING

Kinze Manufacturing, Inc. thanks you for your patronage. We appreciate your confidence in Kinze farm machinery. Your Kinze planter has been carefully designed to provide dependable operation in return for your investment.

This manual has been prepared to aid you in the operation and maintenance of the planter. It should be considered a permanent part of the machine and remain with the machine when you sell it.

It is the responsibility of the user to read and understand the Operator Manual in regards to safety, operation, lubrication and maintenance before operation of this equipment. It is the user's responsibility to inspect and service the machine routinely as directed in the Operator Manual. We have attempted to cover all areas of safety, operation, lubrication and maintenance; however, there may be times when special care must be taken to fit your conditions.

Throughout this manual the symbol ⚠ and the words **DANGER, WARNING,** and **CAUTION** are used to call attention to safety information that if not followed, will or could result in death or injury. **NOTICE** and **NOTE** are used to call your attention to important information. The definition of each of these terms follows:

⚠ **DANGER**	**Indicates an imminently hazardous situation that, if not avoided, will result in death or serious injury. This signal word is to be limited to the most extreme situations, typically for machine components which, for functional purposes, cannot be guarded.**
⚠ **WARNING**	**Indicates a potentially hazardous situation that, if not avoided, could result in death or serious injury, and includes hazards that are exposed when guards are removed. It may also be used to alert against unsafe practices.**
⚠ **CAUTION**	**Indicates a potentially hazardous situation that, if not avoided, may result in minor or moderate injury. It may also be used to alert against unsafe practices.**
NOTICE	**Used to address safety practices not related to personal injury.**

NOTE: Special point of information or machine adjustment instructions.

WARNING

Improperly operating or working on this equipment could result in death or serious injury. Read and follow all instructions in Operator Manual before operating or working on this equipment.

WARNING

Some photos in this manual may show safety covers, shields, or lockup devices removed for visual clarity. NEVER OPERATOR OR WORK ON machine without all safety covers, shields, and lockup device in place as required.

NOTE: Some photos in this manual may have been taken of prototype machines. Production machines may vary in appearance.

NOTE: Some photos and illustrations in this manual show optional attachments installed. Contact your Kinze Dealer for purchase of optional attachments.

WARRANTY

The Kinze Limited Warranty for your new machine is stated on the retail purchaser's copy of the Warranty And Delivery Receipt form. Additional copies of the Limited Warranty can be obtained through your Kinze Dealer.

Warranty, within the warranty period, is provided as part of Kinze's support program for registered Kinze products which have been operated and maintained as described in this manual. Evidence of equipment abuse or modification beyond original factory specifications will void the warranty. Normal maintenance, service and repair is not covered by Kinze warranty.

To register your Kinze product for warranty, a Warranty And Delivery Receipt form must be completed by the Kinze Dealer and signed by the retail purchaser, with copies to the Dealer, and to the retail purchaser. Registration must be completed and submitted to Kinze Manufacturing, Inc. within 5 business days of delivery of the Kinze product to the retail purchaser. Kinze Manufacturing, Inc. reserves the right to refuse warranty on serial numbered products which have not been properly registered.

If service or replacement of failed parts which are covered by the Limited Warranty are required, it is the user's responsibility to deliver the machine along with the retail purchaser's copy of the Warranty And Delivery Receipt to the Kinze Dealer for service. Kinze warranty does not include cost of travel time, mileage, hauling or labor. Any prior arrangement made between the Dealer and the retail purchaser in which the Dealer agrees to absorb all or part of this expense should be considered a courtesy to the retail purchaser.

Kinze warranty does not include cost of travel time, mileage, hauling, or labor.

GENERAL INFORMATION

The Model 3700 Front Folding Planter is available in multiple sizes and row configurations with vacuum or mechanical meters, conventional hoppers or bulk fill system, liquid fertilizer, and various other options. Contact your Kinze Dealer for additional details.

Model 3700 24 Row ASD Planter

Information used in this manual was current at time of printing. However, due to Kinze's ongoing product improvement, production changes may cause your machine to appear slightly different in detail. Kinze Manufacturing, Inc. reserves the right to change specifications or design without notice and without incurring obligation to install the same on machines previously manufactured. To obtain the most recent version of your publication, please contact your Kinze dealer.

Right hand (R.H.) and left hand (L.H.), as used throughout this manual, are determined by facing direction machine travels in use unless otherwise stated.

TOOLS REQUIRED

Hardware Size / Tool Required			
1/4" = 7/16"	7/16" = 5/8" (nut for 7/16" hardware uses 11/16" tool)	3/4" = 1 1/8"	1 1/4" = 1 7/8"
5/16" = 1/2"	1/2" = 3/4"	7/8" = 1 5/16"	1 1/2" = 2 1/4"
3/8" = 9/16"	5/8" = 15/16"	1" = 1 1/2"	

Specification	Conventional Hoppers		
Number of Rows	24R 20	24R 22	24R N 30
Row Spacing	20" (50.8 M)	22" (55.8 M)	30" (76.2 M)
Weight Empty (Mechanical)	18,300 lb (8300.7 kg) - 20,000 lb (9071.8 kg)	18,800 lb (8527.5 kg) - 20,200 lb (9162.5 kg)	20,348 lb (9229.6 kg)
Weight Empty (Vacuum)	18,300 lb (8300.7 kg) - 20,000 lb (9071.8 kg)	18,800 lb (8527.5 kg) - 20,200 lb (9162.5 kg)	24,190 (10972.4 kg)
Axle Weight Empty*	13,200 lb (5987.4 kg)	13,200 lb (5987.4 kg)	13,200 lb (5987.4 kg)
Tongue Weight Empty*	5,480 lb (2485.6 kg)	5,480 lb (2485.6 kg)	5,480 lb (2485.6 kg)
*Weight based off a typical configuration of a complete machine.			
Transport Height	10'-9" (3.3 M)	10'-9" (3.3 M)	11'-7" (3.6 M)
Planting Length	27'-4" (8.3 M)	27'-4" (8.3 M)	30'-11" (9.4 M)
Transport Length	32'-0" (9.7 M)	32'-0" (9.7 M)	36'-11" (11.2 M)
Planting Width	43'-11" (13.3 M)	47'-11" (15.5 M)	62'-9" (19.1 M)
Transport Width: 14'-0" (4.3 M) with granular chemical option	13'-0" (3.9 M)	13'-0" (3.9 M)	13'-0" (3.9 M)
Seed Capacity	1.90 bu. / hopper (Mechanical); 1.75 bu. / hopper (Vacuum)		
Transport Tire Size	(4) 36 x 16-17.5 rib duplex 14-ply tubeless		
Transport Tire Pressure	75 psi (517.1 kPa)		
Wing/Lift Tires	(4 - 24R, 6 - 36R) 255 - 70R 22.5		
Field Tire Pressure	40 psi (275.7 kPa)		
Contact Drive Tires	(4) 4.80 x 8"		
Piston Pump Drive Tires (Optional)	(2) 7.60" x 15"		
Field Lift	Four Master/Two Slave Hydraulics		
Row Markers	Independently controlled, three stage, low profile equipped disk blade depth bands.		

Specification	Bulk Fill			
Number of Rows	24R 20	24R 22	24R N 30	36R N 20
Row Spacing	20" (50.8 M)	22" (55.8 M)	30" (76.2 M)	20" (50.8 M)
Weight Empty (Mechanical)	19,700 lb (8935.7 kg) - 21,100 lb (9570.7 kg)	19, 900 lb (9026.4 kg) - 21,300 (9661.5 kg)	25, 241 lb (11449.1 kg)	26,872 lb (12188.9 kg)
Weight Empty (Vacuum)	19,700 lb (8935.7 kg) - 21,100 lb (9570.7 kg)	19, 900 lb (9026.4 kg) - 21,300 (9661.5 kg)	---	---
Axle Weight Empty*	14,060 lb (6377.5 kg)	14,060 lb (6377.5 kg)	14,060 lb (6377.5 kg)	---
Tongue Weight Empty*	7,780 lb (3528.9 kg)	7,780 lb (3528.9 kg)	7,780 lb (3528.9 kg)	
*Weight based off a typical configuration of a complete machine.				
Transport Height	13'-0" (3.9 M)	13'-0" (3.9 M)	13'-0" (3.9 M)	13'-0" (3.9 M)
Planting Length	27'-4" (8.3 M)	27'-4" (8.3 M)	30'-11" (9.4 M)	30'-11" (9.4 M)
Transport Length	32'-0" (9.7 M)	32'-0" (9.7 M)	36'-11" (11.2 M)	40'-2" (12.2 M)
Planting Width	43'-11" (13.3 M)	47'-11" (14.5 M)	62' 9" (19.1 M)	63' 9" (19.4 M)
Transport Width (14'-0" with granular chemical option)	13'-8" (4.1 M)	13'-8" (4.1 M)	13'-8" (4.1 M)	13'-8" (4.1 M)
Seed Capacity	110 bu.			
Bulk Fill Dimensions (planting position)	8' 7"			
Transport Tire Size	(4) 36 x 16-17.5 rib duplex 14-ply tubeless			
Transport Tire Pressure	75 psi (517.1 kPa)			
Wing/Lift Tires	(4 - 24R, 6 - 36R) 255 - 70R 22.5			
Field Tire Pressure	40 psi (275.7 kPa)			
Contact Drive Tires	(4) 4.80 x 8"			
Piston Pump Drive Tires (Optional)	(2) 7.60" x 15"			
Field Lift	Four Master/Two Slave Hydraulics			
Row Markers	Independently controlled, three stage, low profile equipped disk blade depth bands.			

Configuration	Requirements		Description
Mechanical Metering Configuration			
Base machine with mechanical meters	2 SCV	15 gpm	#1 SCV: planter lift
			#2 SCV: markers / fold (with 12v control console)
Base machine with mechanical meters and Hydraulic drive	3 SCV	25 gpm	#1 SCV: planter lift
			#2 SCV: markers / fold (with 12v control console)
			#3 SCV: hydraulic drive
Base machine with mechanical meters *Bulk Fill system* ➔ *External case drain required for Bulk Fill hydrauilc circuit.*	3 SCV	25 gpm	#1 SCV: planter lift
			#2 SCV: markers / fold (with 12v control console)
			#3 SCV: bulk fill delivery system

Configuration	Requirements		Description
Vacuum Metering Configuration			
Base machine with vacuum meters Tractor mounted PTO hydraulic pump ➔Tractor-mounted PTO hydraulic pump supplies oil flow for vacuum hydraulic circuit.	2 SCV	15 gpm	#1 SCV: planter lift
			#2 SCV: markers / fold (with 12v control console)
Base machine with Vacuum meters *Tractor mounted PTO hydraulic pump* *Hydraulic Drive* ➔ *Tractor-mounted PTO hydraulic pump supplies oil flow for vacuum hydraulic circuit.*	3 SCV	25 gpm	#1 SCV: planter lift
			#2 SCV: markers / fold (with 12v control console)
			#3 SCV: hydraulic drive
Base machine with Vacuum meters *Bulk Fill system* *Tractor mounted PTO hydraulic pump* ➔ *Tractor-mounted PTO hydraulic pump supplies oil flow for vacuum hydraulic circuit.* ➔ *External case drain required for bulk fill vacuum hydraulic circuit.*	3 SCV	25 gpm	#1 SCV: planter lift
			#2 SCV: markers / fold (with 12v control console)
			#3 SCV: bulk fill system
Base machine with Vacuum meters *Bulk Fill system* *Tractor mounted PTO hydraulic pump* *Hydraulic Drive* ➔ *Tractor-mounted PTO hydraulic pump supplies oil flow for vacuum hydraulic circuit.* ➔ *External case drain required for bulk fill vacuum hydraulic circuit.*	4 SCV	35 gpm	#1 SCV: planter lift
			#2 SCV: markers / fold (with 12v control console)
			#3 SCV: hydraulic drive
			#4 SCV: bulk fill system

1. Read and understand instructions provided in this manual and warning labels. Review these instructions frequently!

2. This machine is designed and built with your safety in mind. Do not make any alterations or changes to this machine. Any alteration to design or construction may create safety hazards.

3. A large portion of farm accidents happen from fatigue or carelessness. Safe and careful operation of tractor and planter will help prevent accidents.

4. Never allow planter to be operated by anyone unfamiliar with operation of all functions of the unit. Operators must read and thoroughly understand all instructions given in this manual before operating or working on equipment.

5. Be aware of bystanders, particularly children! Always look around to make sure it is safe to start tow vehicle engine or move planter. This is particularly important with higher noise levels and quiet cabs, as you may not hear people shouting.

6. Make sure planter weight does not exceed towing capacity of tractor, or bridge and road limits. This is critical to maintain safe control and prevent death or injury, or property and equipment damage.

7. Never ride or allow others to ride on planter.

8. Store planter in an area away from human activity. DO NOT permit children to play on or around the stored unit.

9. Keep hands, feet, and clothing away from moving parts. Do not wear loose-fitting clothing which may catch in moving parts.

10. Always wear protective clothing, shoes, gloves, hearing, and eye protection applicable for the situation.

11. Do not allow anyone to stand between tongue or hitch and towing vehicle when backing up to planter.

13. Prevent electrocution, other injuries, or property and equipment damage. Watch for obstructions such as wires, tree limbs, etc. when operating machine. Be aware of clearances during turns and when folding/unfolding planter.

14. Reinstall all guards removed for maintenance activities. Never leave guards off during operation.

15. Use of aftermarket hydraulic, electric, or PTO drives may create serious safety hazards to you and people nearby. If you install such drives, follow all appropriate safety standards and practices to protect you and others near this planter from injury.

16. Follow all federal, state/provincial, and local regulations when towing farm equipment on a public highway. Use safety chain (not an elastic or nylon/plastic tow strap) to retain connection between towing and towed machines in the event of primary attaching system separation.

17. Make sure all safety/warning lights, SMV sign, and reflective decals are in place and working properly before transporting the machine on public roads.

18. Limit towing speed to 15 MPH. Tow only with farm tractor of a minimum 90 HP. Allow for unit length when making turns.

19. Reduce speed prior to turns to avoid the risk of overturning. Always drive at a safe speed relative to local conditions and ensure your speed is slow enough for a safe emergency stop.

20. Chemical application is often an integral part of planting. Follow label instructions for proper chemical mixing, handling and container disposal methods.

21. Be familiar with safety procedures for immediate first aid should you accidentally contact chemical substances.

22. Use the proper protective clothing and safety equipment when handling chemicals.

23. Chemicals are supplied with Material Safety Data Sheets (MSDS) that provide full information about the chemical, its effects on exposure, and first aid needs in the event of an emergency. Keep your MSDS file up-to-date and available for first responders in case of emergency.

24. When servicing ground engaging components such as opening disks and firming points, use special care to avoid points and edges worn sharp during use.

25. Use professional help if you are unfamiliar with working on hydraulic systems. Pressurized hydraulic fluid can penetrate body tissue and result in death, serious infection, or other injuries.

<u>Never pour waste onto the ground, down a drain, or into any water source.</u>

When disposing of waste such as oil, use leakproof containers. Be sure to use containers that do not resemble food or beverage which may mislead someone into consuming them. Dispose of oil per your local, regional requirements.

When disposing of any fertilizer chemicals used, contact the supplier of the chemicals.

Model 3700 planter consists of 85% recyclable metals, 10% recyclable plastic and rubber, and 5% waste.

Following are some common hazard warnings associated with this equipment. Pay close attention to all safety, operating, and maintenance information in this manual and decals applied to your equipment.

DANGER

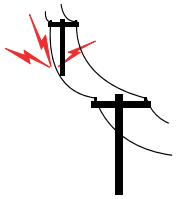

Contacting or coming close to power lines or other high energy sources will cause death or serious injury.

Keep away from power lines or high energy sources at all times.

WARNING

Improperly operating or working on this equipment could result in death or serious injury. Read and follow all instructions in Operator Manual before operating or working on this equipment.

WARNING

Falling equipment can cause death or serious injury. Install all lockup devices or lower planter to ground before working on equipment.

WARNING

Explosive separation of rim and tire parts can cause death or serious injury. Overinflation, rim and tire servicing, improper use of rims and tires, or worn or improperly maintained tires could result in a tire explosion.

SAFETY SIGNS AND DECALS

WARNING

All safety/warning lights, reflective decals, and SMV sign must be in place and visible before transporting machine on public roads or death, serious injury, and damage to property and equipment may result. Check federal, state/ provincial, and local regulations before transporting equipment on public roads.

Safety signs and decals are placed on the machine to warn of hazards and provide important operating and maintenance instructions. Information on these signs are for your personal safety and the safety of those around you. FOLLOW ALL SAFETY INSTRUCTIONS!

- **Keep signs clean so they can be easily seen. Wash with soap and water or cleaning solution as required.**
- **Replace safety signs if damaged, painted over, or missing.**
- **Check reflective decals and SMV sign periodically. Replace if they show any loss of of reflective properties.**
- **When replacing decals, clean machine surface thoroughly with soap and water or cleaning solution to remove all dirt and grease.**

NOTE: Safety sign and decal locations are shown in the Parts Manual for this machine.

NOTE: Style and locations of SMV sign, reflective decals, and safety/warning lights conform to ANSI/ASABE S279.14 JUL 2008 and ANSI/ASABE S276.6 JAN 2005.

This page intentionally left blank.

PLANTER LIFT SAFETY LOCKUP

Uncontrolled machine movement can crush or cause loss of control resulting in death, serious injury, or damage to property and equipment. Install all safety lockup devices before working under or transporting this equipment.

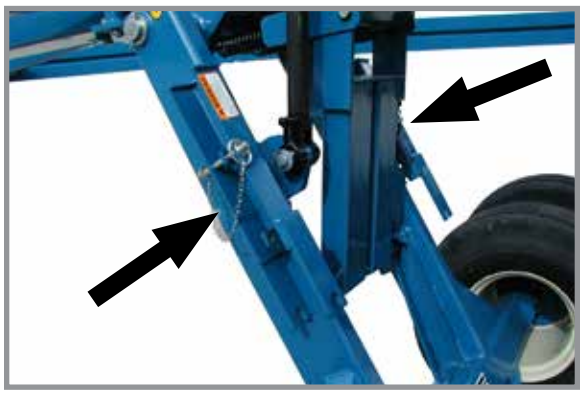

Safety lockup in storage position

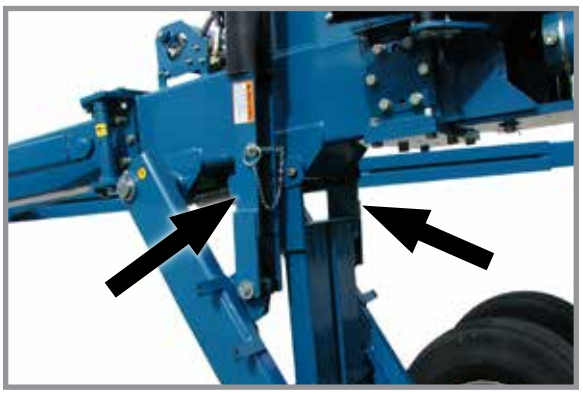

Safety lockup in transport/maintenance position

Planter lift safety lockup is installed between lift cylinder and wheel lift arm. It is held in place by a pin and lynch pin. Remove safety lockup and store on hose take-up for field operation.

ROW MARKER SAFETY LOCKUP

WARNING

Row marker can lower at any time and could cause death or serious injury. Stay away from row markers! Install safety lockup device when not in use.

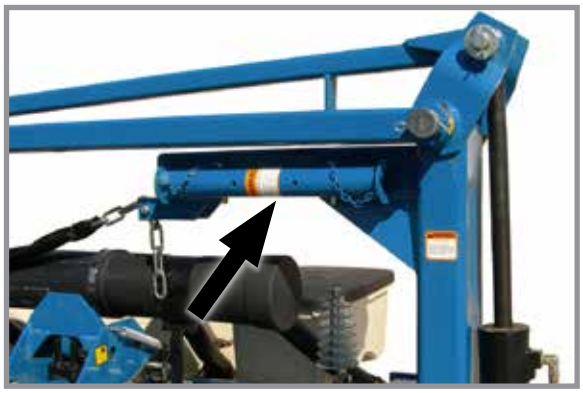

Row marker safety lockup stored

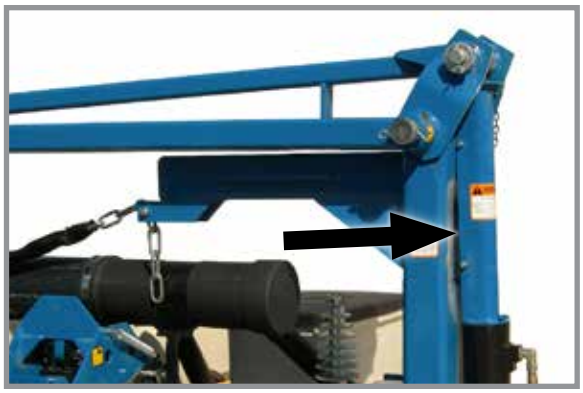

Row marker safety lockup installed

Always install row marker lockups when working on, storing, or transporting planter. Hold in place with two clevis pins.

WARNING

Planter hitch may raise uncontrollably during folding/unfolding and can cause death, serious injury, or damage property and equipment. DO NOT fold or unfold planter without planter attached to a tractor. DO NOT unhitch planter from tractor unless fully folded for transport or fully unfolded with planting units lowered to ground.

WARNING

Uncontrolled movement of equipment can cause loss of control and could result in death, serious injury, or damage to property and equipment. Install all safety pins before transporting equipment.

HITCH PARALLEL LINKAGE LOCKUP

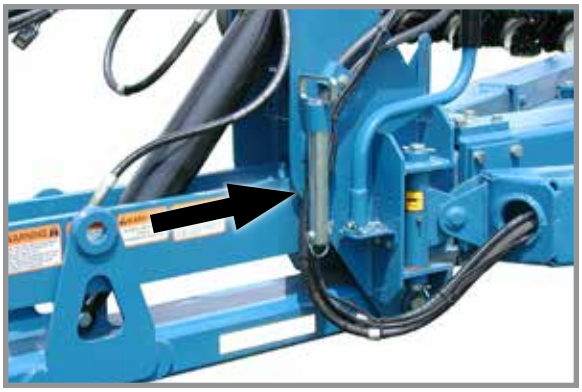

Hitch parallel linkage pin stored

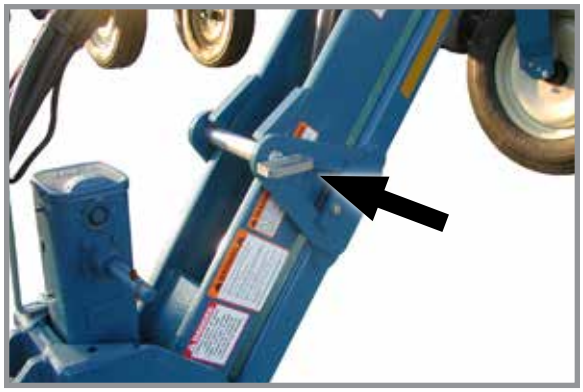

Hitch parallel linkage pin installed

A hitch parallel linkage lock pin locks hitch parallel linkage in raised (transport) position.

2-SPEED JACK ASSEMBLY

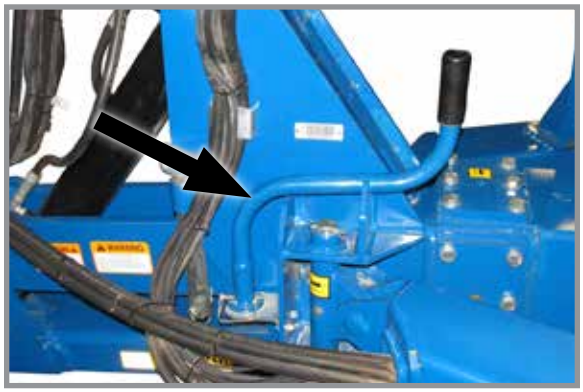

Jack handle stored

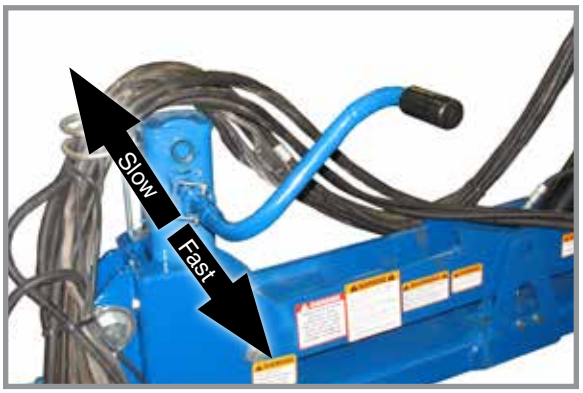

Jack handle installed

Store jack on L.H. side of hitch. Secure in place with spring pin. Install jack on hitch post and secure in place with spring pin. Pull out on handle for high speed or push in on handle for low speed operation.

WARNING

Improperly operating or working on this equipment could result in death or serious injury. Read and follow all instructions in Operator Manual before operating or working on this equipment.

INITIAL PLANTER PREPARATION

Following information is general in nature to aid in preparation of tractor and planter for use, and to provide general operating procedures. Operator experience, familiarity with the machine, and the following information should combine for efficient planter operation and good working habits.

WARNING

Explosive separation of rim and tire parts can cause death or serious injury. Overinflation, rim and tire servicing, improper use of rims and tires, or worn or improperly maintained tires could result in a tire explosion.

WARNING

Wheel separation can cause loss of control resulting in death, serious injury, or damage to property and equipment. Check lug nuts on transport wheels are tight before operating planter for first time and periodically after.

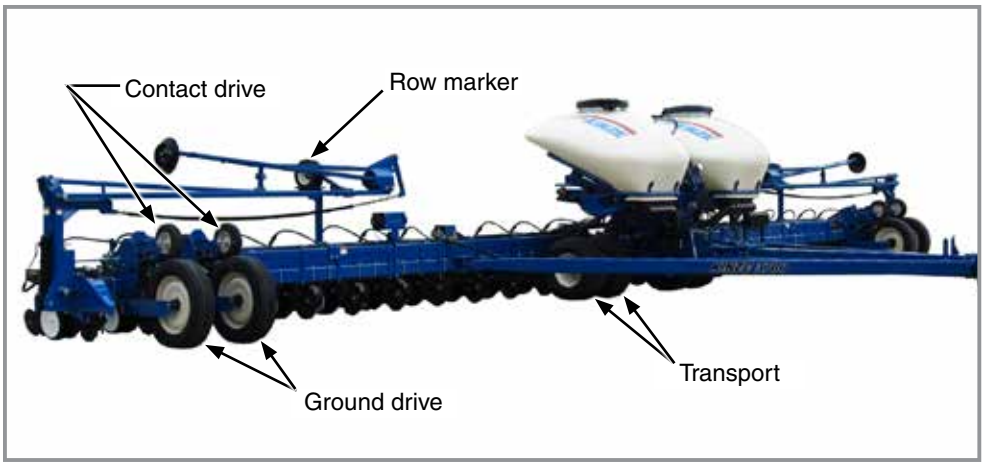

Tire locations (L.H. mirrors R.H. shown)

1. Torque transport wheel ¾"- 16 lug nuts to 200 ft-lb (244 N-m).

2. Inflate tires to the following specifications:

   - Ground drive (wings) - 225 x 70R 22.5 - 75 psi (517.1 kPa)
   - Transport - 36" x 16" x 17.5" - 75 psi (517.1 kPa)
   - Contact drive - 4.80" x 8" - 50 psi (344.7 kPa)
   - Row marker - 16" x 6.5" x 8" - 14 psi (96.5 kPa)
   - Liquid fertilizer piston pump (Not shown) - 4.10" x 6" - 50 psi (344.7 kPa)

3. Lubricate planter and row units per lubrication information in this manual.

4. Check all drive chains for proper tension, alignment, and lubrication.

TRACTOR REQUIREMENTS

NOTICE

All Hydraulic Requirements: Minimum Pressure 2350 PSI (16202.6 kPa); Maximum Pressure 3000 PSI (20684.2 kPa). Check tractor hydraulics to ensure that maximum pressure cannot be exceeded.

Consult your dealer for information on horsepower requirements and tractor compatibility. Requirements vary with planter options, tillage, and terrain.

Two dual remote hydraulic outlets (SCV) are required on all sizes of conventional planters equipped with row markers.

Four dual remote hydraulic outlets (SCV) are required on all sizes of bulk fill planters equipped with row markers. A 12 volt DC electrical system is required on all sizes.

VACUUM TRACTOR MOUNTED PTO PUMP AND PLANTER MOUNTED HYDRAULICS

Two-section PTO hydraulic pump

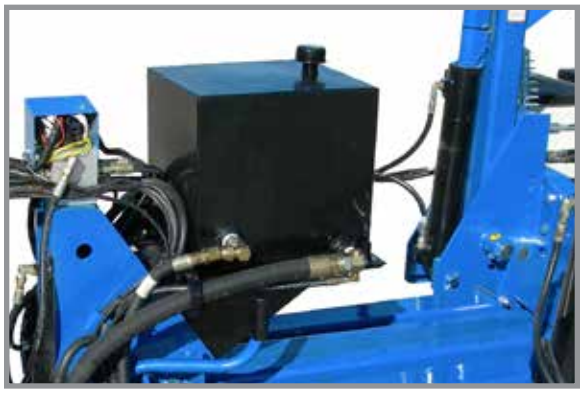

8 gal (30.3 L) reservoir

Vacuum equipped planters require a 1¾"-20 spline 1000 RPM PTO to operate PTO-driven two section hydraulic pump capable of supplying 15 gpm (56.8 Lpm) to two hydraulic motors/vacuum fans.

Vacuum Seed Metering System operates from an 8 gal (30.3 L) capacity oil reservoir.

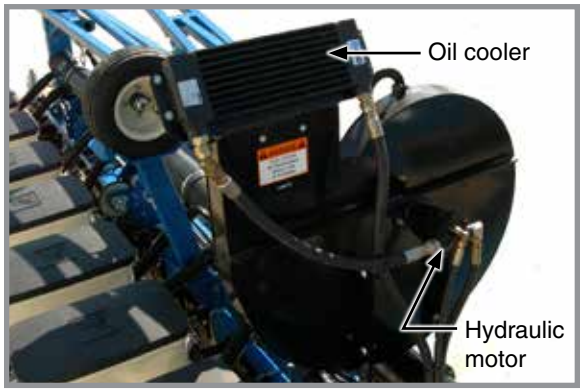

Vacuum fan assembly with oil cooler

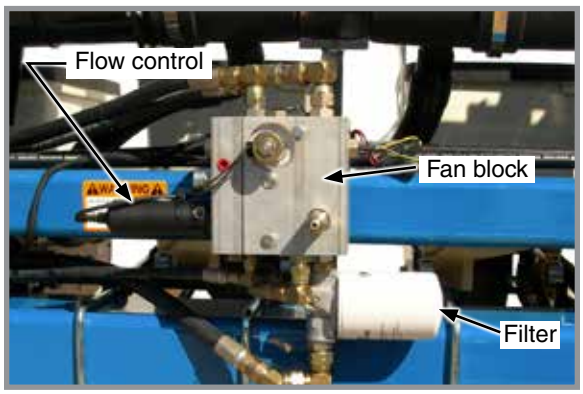

Vacuum fan block and filter

Other dual fan system components include two oil coolers, two replaceable cartridge-type filters, two motorized flow controls, pressure compensating valves, solenoid valves, and relief valves.

TRACTOR PREPARATION AND HOOKUP

Planter control console

Digital vacuum gauge control console

1. Install planter control console (all) and digital vacuum gauge (vacuum only) control consoles on tractor in convenient locations within operator reach and close to hydraulic controls. Mount control consoles securely and route power cables to power source. A power lead adapter may be required. See Lubrication and Maintenance section for wiring schematics.

NOTE: Control console operates on 12 volt DC only. If two 6 volt batteries are connected in series, make sure power connection provides 12 volt DC across positive terminal on one battery and negative terminal of second battery. ALWAYS make power connection on battery grounded to tractor chassis.

2. Adjust tractor drawbar 13-17 inches (33 cm - 43 cm) above ground with hitch pin hole directly below PTO shaft center line. Make sure drawbar is in a stationary position.

WARNING

Planter hitch may raise uncontrollably during folding/unfolding and can cause death, serious injury, or damage property and equipment. DO NOT fold or unfold planter without planter attached to a tractor. DO NOT unhitch planter from tractor unless fully folded for transport or fully unfolded with planting units lowered to ground.

3. Back tractor to planter and connect with minimum 1¼" diameter hitch pin. Make sure hitch pin is secured with a locking pin or cotter pin If tractor is not equipped with a hitch pin locking device.

NOTE: DO NOT install safety chain using clevis mounting hardware. Safety chain MUST be installed separately.

4. Safety chain must be used to keep planter and tractor connected in case of a hitch pin/drawbar failure. Attach safety chain at an unused clevis mounting hole on the planter hitch. Torque hardware to 840 ft-lb (1138.8 N-m).

2015 - 2018 Production

2019 Production and On

Tractor and safety chain hookup

WARNING

Pressurized hydraulic fluid can penetrate body tissue and result in death, serious infection, or other injuries. Fluid injected under skin must be IMMEDIATELY removed by a surgeon familiar with this type of injury. Make sure connections are tight and hoses and fittings are not damaged before applying system pressure. Leaks can be invisible. Keep away from suspected leaks. Relieve pressure before searching for leaks or performing any system maintenance.

NOTICE

Wipe hose ends to remove any dirt before connecting couplers to tractor ports or contamination may cause equipment failure.

NOTICE

Connect hydraulic motor case drain to a case drain return line with zero PSI on tractor. Failure to connect to a return with zero PSI will cause hydraulic motor shaft seal damage. DO NOT connect hydraulic motor case drain to a SCV outlet or motor return circuit connection. Contact tractor manufacturer for specific details on “zero pressure return”.

NOTICE

Always connect hydraulic motor return hose to tractor motor return port. Do not connect to tractor SCV unless through a motor spool or hydraulic motor failure can occur. If a motor return port is not available on the tractor, the SCV controlling the bulk fill system MUST be in the float position before planter is moved in planting or field raised position when bulk fill system is not in use.

5. Connect hydraulic hoses to tractor ports in a sequence familiar and comfortable to the operator.

Color and Label	Machine Function	Hose Size	Hose Function
Red AA	Field Lift	½"	Pressure
Red BB		½"	Return
Blue AA	Planter Fold & Row Marker	⅜"	Return
Blue BB		⅜"	Pressure
Green RR	Vacuum Fan	¾"	Return
Green PP		½"	Pressure
Orange CD		⅜"	Case Drain
Yellow RR	Bulk Fill System Pressure Fan	¾"	Return
Yellow PP		½"	Pressure
Orange CD		⅜"	Case Drain

NOTICE

Clean and grease PTO shaft coupling with high-pressure industrial coupling grease (Chevron® coupling grease or equivalent) meeting AGMA CG-1 and CG-2 Standards each time driveshaft is installed or premature wear and equipment failure can occur.

NOTE: A tractor model-specific PTO mount kit is required and available from Command Hydraulics (800-778-6200 www.commandhydraulics.com) to order and purchase tractor specific PTO pump mount.

6. (If applicable) Install PTO pump onto tractor PTO shaft. Make sure shaft rotation matches direction indicated on pump housing.

7. Connect ASABE Standards 7 terminal connector for safety/warning lights on planter to ASABE Standards receptacle on tractor. If your tractor is not equipped with an ASABE Standards receptacle, check with your tractor manufacturer for availability. Check warning lights on planter work in conjunction with warning lights on tractor.

NOTE: A 12 volt battery connection is required to power the vacuum fan digital gauge. Connect "red" wire to positive (+) battery terminal and "black" wire to negative (-) battery terminal.

Completely raise parking jack to prevent damage to jack assembly and equipment when moving planter.

TRANSPORTING PLANTER

Loss of control of equipment during transport can result in death, serious injury, or damage to property and equipment. Tractor gross weight must be greater than planter gross weight with attachments and options.

Uncontrolled movement of equipment can cause loss of control and could result in death, serious injury, or damage to property and equipment. Install all safety pins before transporting equipment.

Uncontrolled machine movement can crush or cause loss of control resulting in death, serious injury, or damage to property and equipment. Install all safety lockup devices before working under or transporting this equipment.

Transporting planter with hoppers over half full or unevenly loaded can cause loss of control and could result in death, serious injury, or damage to property and equipment. Properly load planter when transporting. Be aware of extra transport weight, and road conditions and limits.

Make sure safety/warning lights, reflective decals, and SMV sign are in place and visible before transporting machine on public roads. It is your responsibility to check and comply with all federal, state/provincial, and local regulations.

Be aware of road and bridge weight limits. Allow for additional weight of added options and any additional material or substances that have been added to the machine.

LEVEL PLANTER

Clevis adjustment holes

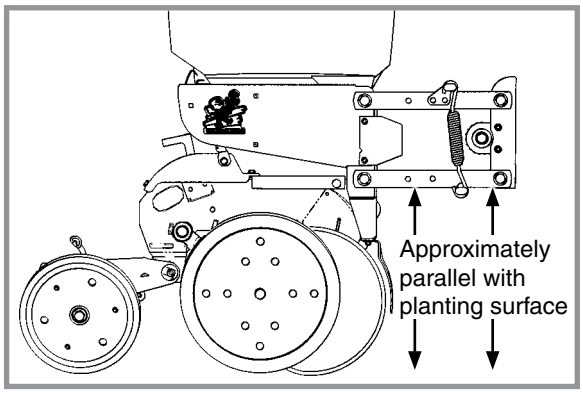

Level row units

Toolbar should operate at 20"-22" (50 cm - 56 cm) height from planting surface. Tire pressures must be maintained at pressures specified for planter to operate level laterally. Check toolbar and row unit parallel arms are level front to back with planter lowered to proper operating height.

Five holes in the hitch bracket allow clevis to be raised or lowered. Clevis may be turned over for a finer adjustment between mounting holes. Torque hardware to 840 ft-lb (1138.8 N-m).

Field and actual planting conditions determine which wheel settings to use to ensure row unit parallel arms are approximately parallel with planting surface. If planting in extremely soft soil conditions it may be necessary to move ground drive tires to lower sets of mounting holes. To allow adequate drive force after lowering the ground drive tires, it may be necessary to lower contact drive arms to lower set of holes in wheel module and relocate down pressure springs to lower mounting rod on wheel module.

If planter center is higher or lower than wings after rephasing, contact your Kinze Dealer for valve adjustment or maintenance.

CONTACT WHEEL SPRING ADJUSTMENT

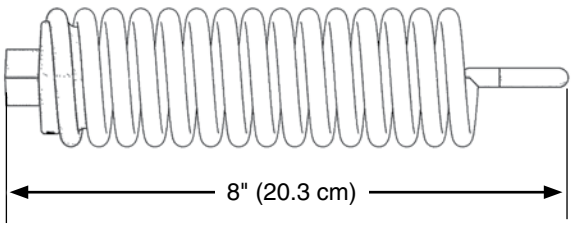

Spring length measurement (Factory setting)

Contact drive springs

There are two down pressure springs on each contact drive wheel. Spring tension is factory set to approximately 200 lb (90.7 kg) of down force at tire contact point and should require no further adjustment.

NOTE: Measurement must be taken in planting position with proper tire pressure.

CONTACT WHEEL DRIVE SPROCKETS

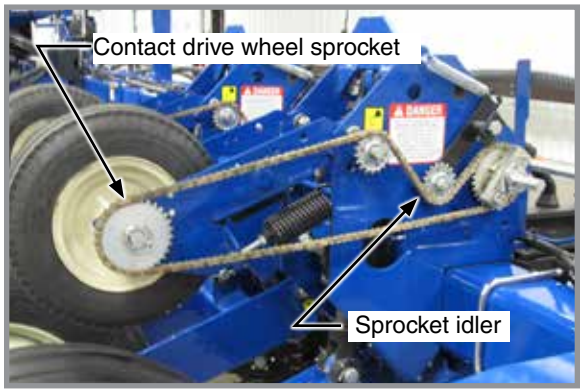

Contact wheel drive

Optional half-rate drive sprocket

Contact wheel drive works the same for mechanical or vacuum planters except for sprocket size. Chain tension is controlled by a spring-loaded sprocket idler. Planting rate charts in “Rate Chart” section help you select correct sprockets.

NOTE: Make a field test after each sprocket combination change to be sure you are planting at desired rate.

22 tooth, 28 tooth or 44 tooth sprockets at each contact drive wheel can be exchanged with sprockets on storage rod bolted to wheel module on each side of planter chains. 22 tooth sprockets require 148 pitch No. 40 chains. 28 tooth sprockets require 150 pitch chains. 44 tooth sprockets require use 158 pitch chains.

NOTE: 22, 28 and 44 tooth drive sprockets do NOT apply to all rate charts. Check chart titles to make sure proper rate chart is selected.

NOTE: 54 cell sunflower disc uses 15 tooth drive sprocket at contact wheels and 28 tooth drive sprocket at wheel module reverser plates with 19 tooth sprocket. 15 tooth sprockets require 144 pitch No. 40 chains. Applicable sprockets, chains and instructions supplied in G1K469 Sunflower Rate Reduction Kit.

Seed planting rate charts are based on standard rate drive. Standard rate drive uses a 30 tooth sprocket and No. 40 118 pitch chain on each contact wheel. Optional half-rate (2 to 1) drive is recommended only when population falls below planting rate charts. Replace 30 tooth sprocket on each contact wheel with a 15 tooth sprocket and shorter No. 40 110 pitch chain. This reduces planter transmission speed and planting and application rates by approximately 50%.

SEED RATE TRANSMISSION ADJUSTMENT

Planting population rate changes are made using seed rate transmissions at end of each planter wing. Seed rate transmissions allow simple, rapid changes of sprockets by removing lynch pins on hexagon shafts and changing sprockets with those from the sprocket storage rod bolted to transmissions.

Chain tension is controlled by a spring-loaded dual sprocket idler. Idler assembly is adjusted with a easy-release idler arm with a release position to adjust spring tension for planting or remove spring tension for replacing sprockets. See “Wrap Spring Wrench Operation”.

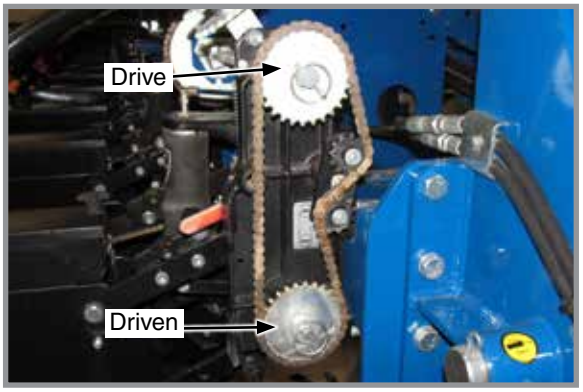

Seed rate transmission

A decal on the transmission (behind chain idler) shows proper chain routing. "Rate Charts" section of this manual will help you select correct sprocket combinations.

WRAP SPRING WRENCH OPERATION

Chain idlers are equipped with wrap spring wrenches. L.H. rotation wrap spring wrenches have a blue release collar and R.H. rotation wrap spring wrenches have a grey or black release collar.

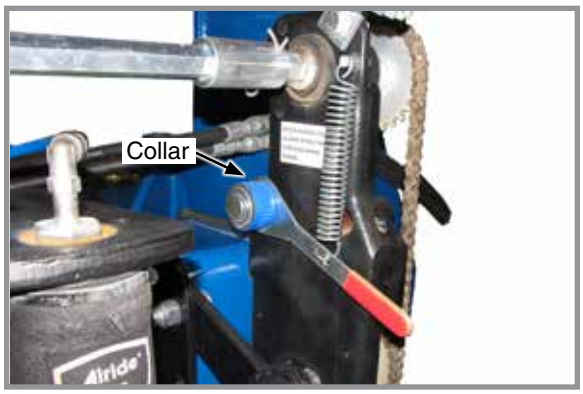

Wrap spring wrench (L.H. rotation shown)

Chain idler tensioning

Rotate collar on wrap spring wrench and pull handle to release chain tension.

Rotate chain idler into chain and pull handle to tension idler spring.

SHEAR PROTECTION

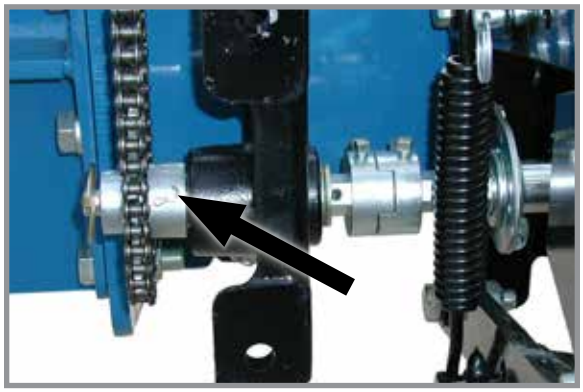

Transmission shaft shear pin

Spare shear pin storage

Planter driveline and seed and granular chemical drivelines are protected from damage by shear pins.

NOTICE

Misalignment of drill shaft/transmission coupler alignment will cause equipment damage.

Determine where binding has occurred if excessive load causes a pin to shear before replacing pin. Replace shear pins with same size and type.

Additional shear pins are in the storage area located at end of each planter wing on inboard side of transport hook.

SLIDING HITCH LINKAGE

Axle link slide (L.H. shown)

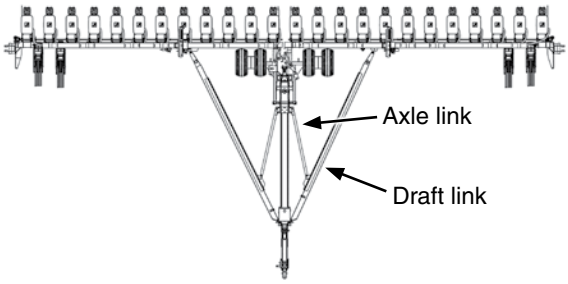

24 Row 30" and 36 Row 20" planters are equipped with sliding axle links which connect R.H. and L.H. draft links to transport axle. Axle links move in a slide on inner side of each draft link when planter folds or unfolds. When axle links reach end of slides, main transport axle is telescoped forward into transport position or rearward into field position.

NOTICE	**DO NOT GREASE axle link slides or excess dirt accumulation may cause equipment failure. Inspect daily to ensure free movement of axle links in slides. Keep axle link slides clean. Use only powdered graphite if lubrication is desired.**

Stops at either end of slides are designed to allow dirt to escape In normal operating conditions. Under extremely dusty conditions it may be necessary to clean slides.

DIGITAL VACUUM GAUGE

Digital vacuum gauge control console is equipped with a power toggle switch, run/stop (fans) toggle switch, and two fan speed control toggle switches for the vacuum fans.

Power switch applies power to control console. Run/stop toggle switch turns both fans on when power switch is ON. Fan speed control switches adjusts each fan (left or right).

Digital vacuum gauge control console

PTO PUMP INITIAL STARTUP

1. Fill reservoir with SAE 10W-20 multigrade wide temperature range transmission hydraulic fluid or equivalent.

2. Start system. Allow to run with tractor at idle and fans turned off for 1-2 minutes.

3. Allow to run with tractor at idle and fans at full speed for 1-2 minutes.

4. Check fluid level in reservoir and fill as required.

NOTE: Fluid level in each tank should be within 1"-2" (1.5 cm - 5 cm) from top of the tank after pump has run and hydraulic hoses are primed to allow fluid to expand when heated.

5. Bring tractor to PTO speed and adjust flow control to desired vacuum level using switches on vacuum fan control console.

HYDRAULIC/ELECTRIC OPERATION

Control console switches and tractor's hydraulic system are used to raise planter to transport position, operate rotate and tongue extension functions, lock and release planter wings, and raise and lower row markers.

NOTE: Turn console backlighting OFF during extended periods of non-use using push button switch on back of console.

Single point row clutch control box

Two-speed point row clutch control box

Two dual remote hydraulic outlets (SCV) are required on all sizes of conventional planters equipped with row markers. Three dual remote hydraulic outlets (SCV) are required on all sizes of bulk fill planters equipped with row markers. One set of outlets is used to operate lift function, one set is used to operate markers, tongue and fold/unfold functions and the third set is used to operate bulk fill functions (If Applicable).

Marker and point row selector switches are an ON-OFF-ON type. If planter is equipped with optional Two-Speed Point Row Clutch Package, point row switch and reduced rate switch operate independently from rest of control console.

Power to marker switch is fed through auxiliary switch and two transport function switches. Operating any lower row switch disables markers and turns off marker indicator light.

Raise/wing lock and rotate/tongue (fold function) switches are MOMENTARY ON-OFF-MOMENTARY ON type and must be held in position while operating tractor hydraulic SCV control. Activating a fold function switch disables marker circuit.

WARNING

Marker selector switch must be OFF (center position) when not in use to prevent accidental extension which could result in death or serious injury, or damage to property and equipment. An indicator light on control box panel is ON whenever marker circuits or point row clutch circuits are energized.

Auxiliary switch is not used. Keep switch OFF at all times.

NOTE: Activating auxiliary switch disables all other control console switches except point row clutch switch.

HYDRAULIC DRIVE

When stopping in the middle of a field, drive runs a split second after tractor and planter come to a complete stop. Shut master switch OFF before coming to a complete stop to avoid bunching of seeds.
To avoid skips starting from a complete stop, lift planter and back-up 4-6 feet, put planter in ground, and accelerate slowly to continue planting.

AG LEADER ELECTRIC CLUTCHES

Electric clutches along with GPS can stop seed flow by turning off seed meters (and planter sections) based on field mapping and previously planted areas.

HALL EFFECT SENSOR

Set Hall Effect sensor within ⅛" of pick-up disc.

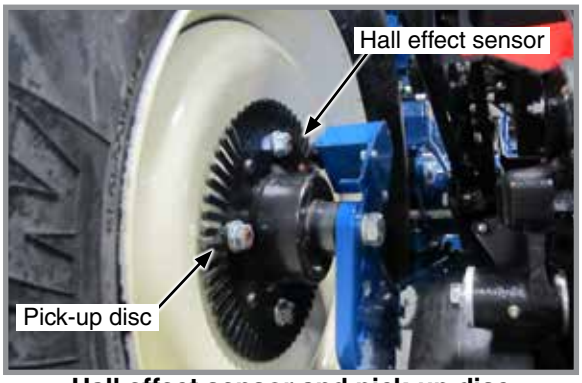

Hall effect sensor and pick-up disc

TRANSPORT TO FIELD SEQUENCE

Position planter in a relatively flat open area without furrows, etc.

SUMMARIZED TRANSPORT TO FIELD SEQUENCE

1. Remove hitch parallel linkage lock pin or lockup.
2. Lower hitch parallel linkage to release wing hooks.

NOTICE

Unfolding planter without using tractor to assist may cause equipment damage especially in soft conditions or when loaded with seed or fertilizer. Use tractor to reduce stress on frame, drive, and transport components.

3. Place tractor in reverse and hold in clutch. Start unfolding planter and slowly back up tractor as planter unfolds.
4. Raise planter to remove weight from center (slave) lift cylinder lockups and remove lockups.
5. Lower planter.
6. Remove row marker lockups.
7. Lower catwalk ladder (36 row 20" bulk fill only)

NOTE: Read following information for detailed instructions.

WARNING

Planter hitch may raise uncontrollably during folding/unfolding and can cause death, serious injury, or damage property and equipment. DO NOT fold or unfold planter without planter attached to a tractor. DO NOT unhitch planter from tractor unless fully folded for transport or fully unfolded with planting units lowered to ground.

NOTICE

DO NOT LOWER planter frame onto transport axle in folded transport position or transport tires and row units will be damaged.

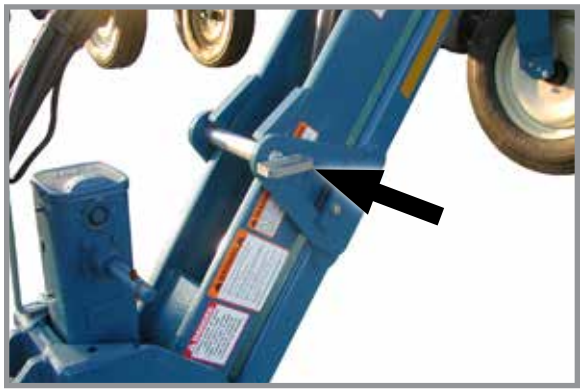

Hitch parallel linkage pin installed

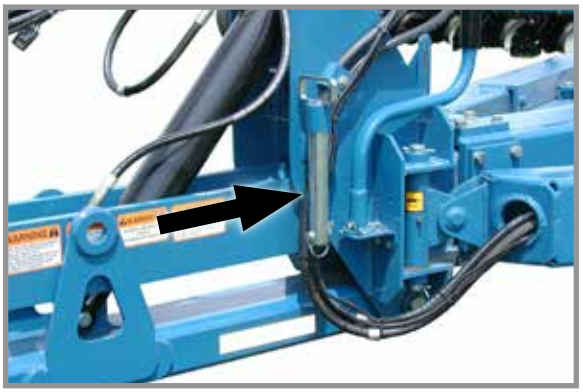

Hitch parallel linkage pin stored

1. Fully extend hitch parallel linkage cylinder located on hitch. Remove hitch parallel linkage lock pin from hitch parallel linkage or cylinder lockup from cylinder rod. Store in location provided.

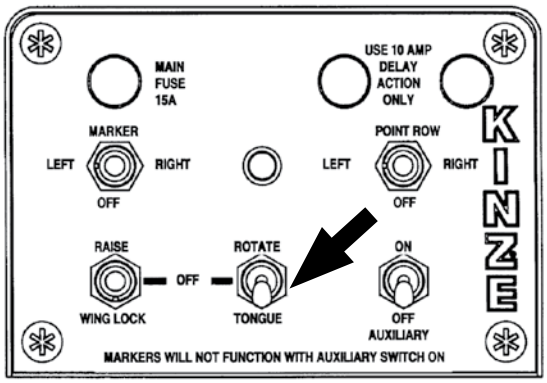

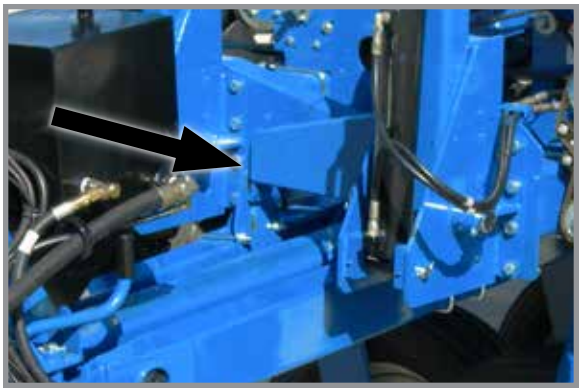

Hitch release from wing hook

2. Hold “ROTATE/TONGUE” switch in “TONGUE” position while operating proper tractor hydraulic control to completely retract hitch parallel linkage cylinder and lower hitch until wing wheels are on ground and hitch has released from hooks on ends of wings.

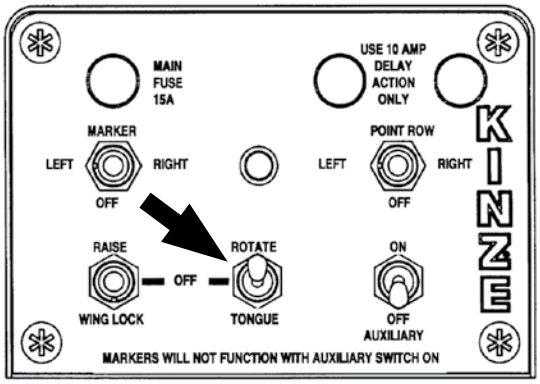

Planter unfolding

NOTICE	**Unfolding planter without using tractor to assist may cause equipment damage especially in soft conditions or when loaded with seed or fertilizer. Use tractor to reduce stress on frame, drive, and transport components.**

3. Hold control console ROTATE/TONGUE switch in **ROTATE** and operate hydraulic control to unfold planter. Tongue begins to retract and wings (supported by wing wheels) begin to unfold. Place tractor transmission in a low reverse gear and slowly back up as planter unfolds. Center axle tires should remain stationary and wing tires should roll in a continuous arc with minimal side loading on tires or their mounting structures. Hold switch in “ROTATE” position until tongue cylinder is fully retracted.

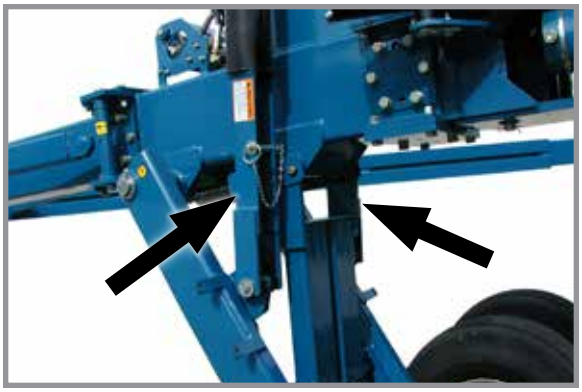

Safety lockups in transport position

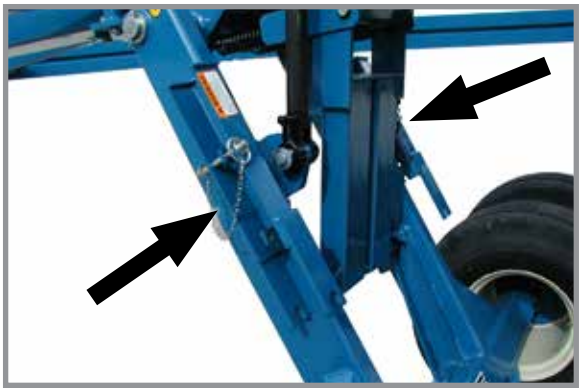

Safety lockups in storage position

NOTE: Automatic safety lock will release when planter is raised to remove weight from center lift cylinder lockups. Raising planter too high will reset the mechanism. If this happens, lower machine until hydraulic system stalls against the automatic safety, raise machine slightly to release automatic safety lock and then lower planter.

4. Raise planter to remove weight from center lift (slave) cylinder safety lockups. Remove pins and safety lockups and place in storage location.

5. Lower machine to ground. Center drops until toolbar is level and then entire planter lowers evenly. Hold tractor's hydraulic lever 5 to 10 seconds to rephase system when all lift cylinders are fully retracted.

Lowering planter

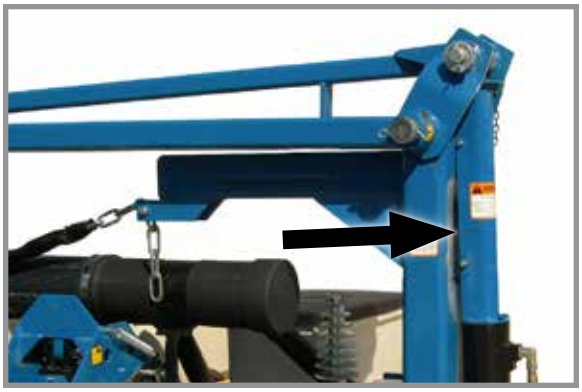

Row marker safety lockup installed

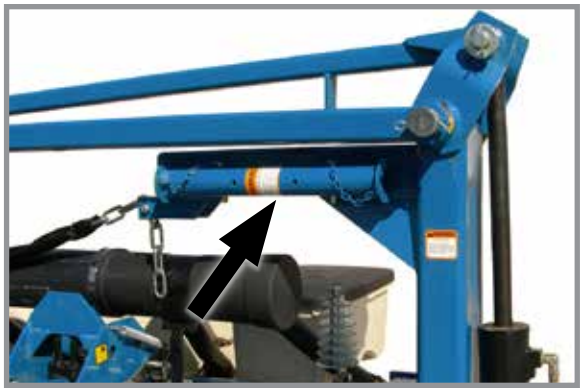

Row marker safety lockup stored

6. Remove and store marker lockups.

Catwalk and ladder folded

Catwalk and ladder unfolded

7. (36 Row 20" only) Pull on catwalk release lever and swing catwalk extension out until it locks into position. Lift and swing over ladder.

FIELD OPERATION

Planters are designed to operate within a speed range of 2 - 8 mph (3 - 13 kph). Higher ground speeds can cause more variation in seed spacing. Speeds above 5.5 mph (8.8 kph) are typically not recommended.

NOTICE: Always raise planter out of ground when making sharp turns or backing up.

Normal field planting operation requires use of tractor's hydraulic control to raise and lower planter frame when making field turn arounds. Place hydraulic lever in float position during normal field operation.

NOTICE: Operate row markers in float position to prevent damage to row markers.

Operate row markers with control console switch for that marker in ON (LEFT or RIGHT) position and tractor's hydraulic control. After markers are lowered to ground, move hydraulic control to operate markers in float position. Marker speed is controlled with flow control valves located in planter hitch valve block. One valve controls raise speed and other valve controls lower speed of both markers. See "Row Marker Speed Adjustment" and "Row Marker Operation".

FIELD TO TRANSPORT SEQUENCE

Position planter in a relatively flat open area without furrows, etc.

SUMMARIZED FIELD TO TRANSPORT SEQUENCE

1. Raise and stow catwalk ladder (36 Row 20" bulk fill only).
2. Install marker lockups.
3. Raise planter to fully extend master/slave cylinders.
4. Install center (slave) lift cylinder lockups.
5. Lower planter onto center lift cylinder lockups.

NOTICE

Folding planter without using tractor to assist may cause equipment damage especially in soft conditions or when loaded with seed or fertilizer. Use tractor to reduce stress on frame, drive, and transport components.

6. Place tractor in low forward gear and hold in clutch. Start folding planter and move tractor slowly forward as planter folds to keep wing wheel side pressure to a minimum.
7. Raise hitch parallel linkage to engage wing hooks.
8. Install hitch parallel linkage lock pin or lockup bracket.
9. Lower hitch parallel linkage cylinder.

NOTE: Read following information for detailed instructions.

WARNING

Planter hitch may raise uncontrollably during folding/unfolding and can cause death, serious injury, or damage property and equipment. DO NOT fold or unfold planter without planter attached to a tractor. DO NOT unhitch planter from tractor unless fully folded for transport or fully unfolded with planting units lowered to ground.

Catwalk and ladder unfolded

Catwalk and ladder folded

1. (36 Row 20" only) Lift and swing over ladder onto top of catwalk extension. Pull on catwalk release lever and swing extension to right until it locks into position.

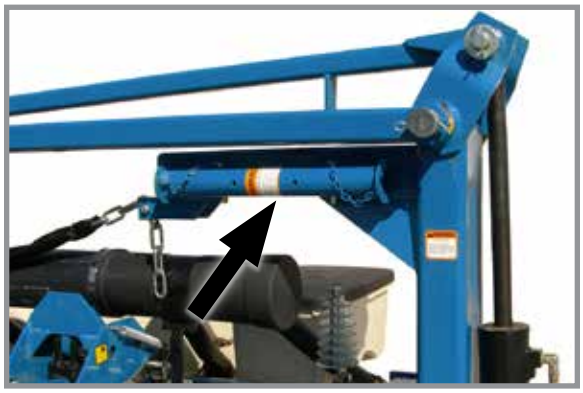

Row marker safety lockup stored

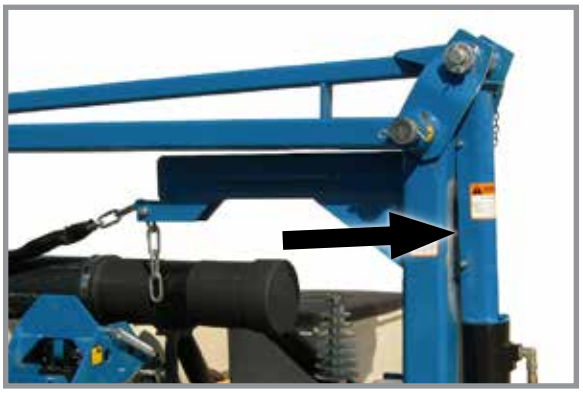

Row marker safety lockup installed

2. Install cylinder lockups on marker cylinders to prevent markers from unfolding when not in use or planter is in transport position.

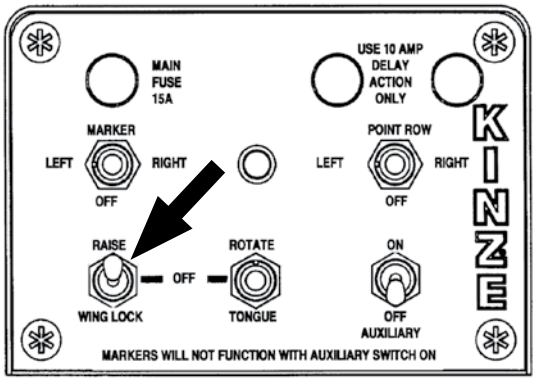

Raising planter

3. Hold RAISE/WING LOCK switch on control console in **RAISE** while operating proper tractor hydraulic control to raise planter. Planter frame should raise level until lift (master) cylinders at ends of wings are fully extended. Center lift (slave) cylinders will continue to extend (at a somewhat slower rate) until they are fully extended.

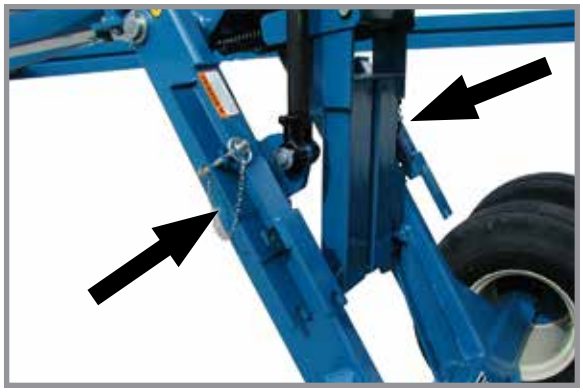

Safety lockups in storage position

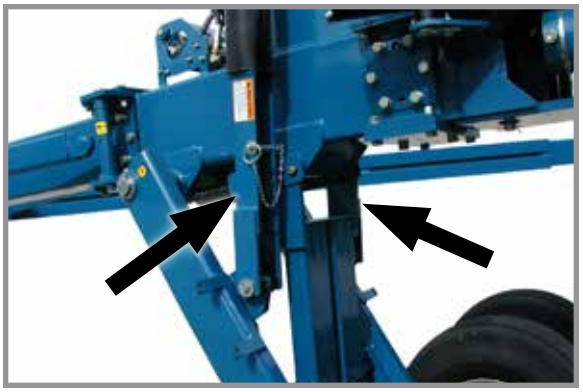

Safety lockups in transport position

NOTICE

DO NOT fold planter into transport position without lift cylinder lockups installed or uncontrolled planter settling can damage equipment.

4. Install center (slave) lift cylinder lockups. Install pin assembly to lock each in place.

5. Lower planter onto center lift (slave) cylinder lockups.

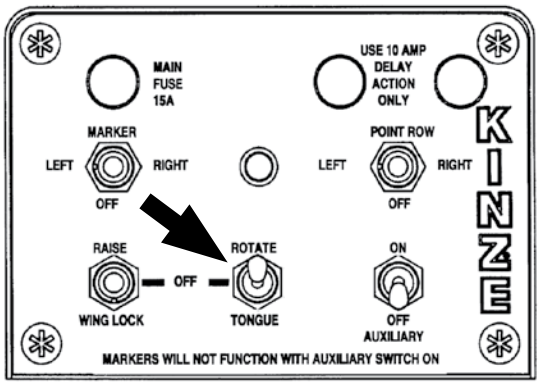

Planter folding

6. Hold ROTATE/TONGUE switch in **ROTATE** and operate hydraulic control to fold planter. Slowly idle tractor forward as you fold planter, allowing center axle tires to remain stationary and wing tires to roll in a continuous arc with minimal side loading on tires or their mounting structure. Hooks on wing ends should pass over planter hitch and contact stops on draft links.

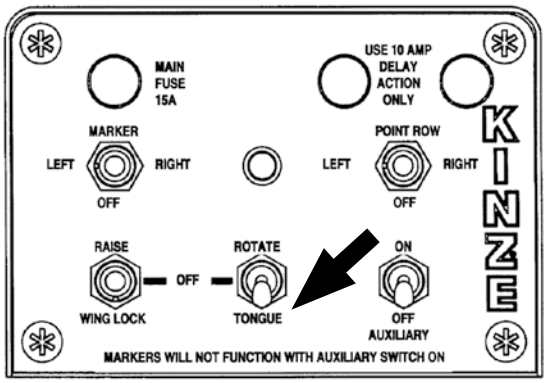

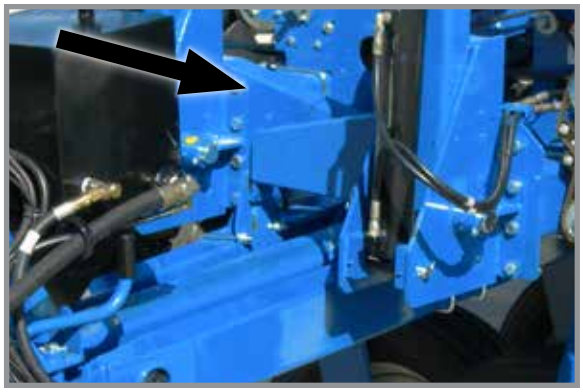

Wing end hook

NOTICE

DO NOT LOWER planter frame onto transport axle in folded transport position or transport tires and row units will be damaged.

7. Raise hitch parallel linkage to completely engage wing hooks and completely lift wing wheels off ground.

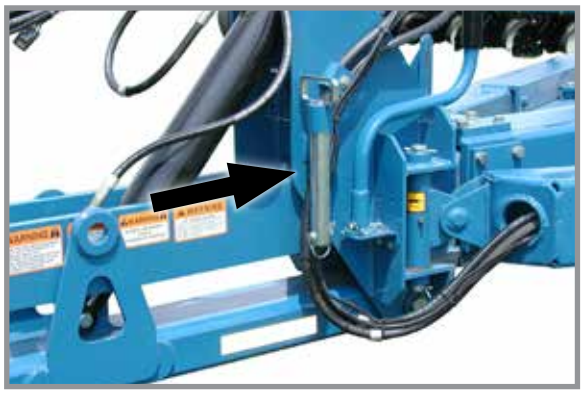

Hitch parallel linkage pin stored

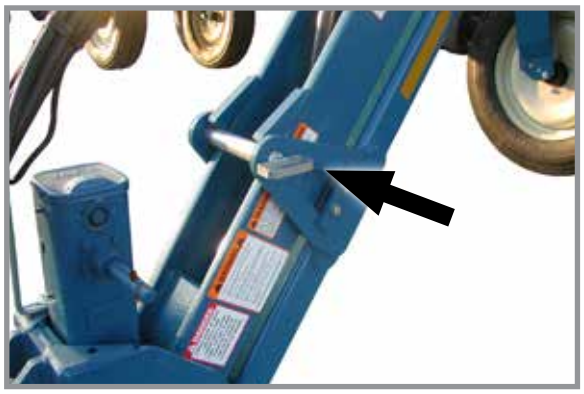

Hitch parallel linkage pin installed

8. Install parallel linkage lock pin.

9. Lower parallel link cylinder onto lock pin.

ROW MARKER OPERATION

DANGER

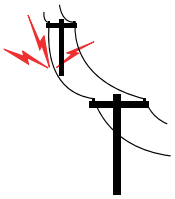

Contacting or coming close to power lines or other high energy sources will cause death or serious injury.

Keep away from power lines or high energy sources at all times.

Marker switch

Row marker solenoid valves

Two solenoid valves on valve block at rear R.H. side of center frame, and a three position selector switch on control console permit operator to lower or raise desired row marker.

NOTICE

Marker position switch must be OFF when planter is not in use or tractor battery will drain.

NOTE: See row marker adjustments on following pages.

1. Select which row marker to lower on control console.
2. Operate hydraulic control to lower row marker.
3. Move control switch to other side to operate opposite row marker.
4. Raise row marker at end of field using hydraulic control.
5. After turn, using the hydraulic control, lower the pre-selected row marker.
6. Continue to follow this procedure.

NOTE: Both row markers can be lowered by operating switch in each position and hydraulic control twice. Row markers raise simultaneously with hydraulic control in raise position.

If electrical system does not operate properly:
- Check fuse.
- Check wiring connections.
- Check control switch.
- Check solenoid. SOLENOID HOUSING IS MAGNETIZED WHEN ENERGIZED.

ROW MARKER SPEED ADJUSTMENT

NOTICE

Excessive row marker travel speed can damage row markers. Adjust flow controls before row markers are first used.

Marker hydraulic system includes two flow control valves. One flow control valve sets lowering speed and one sets raising speed of both markers. Flow controls determine amount of oil flow restriction through valves, varying marker travel speed.

Loosen jam nut and turn control clockwise, or IN to slow travel speed. Turn counterclockwise, or OUT to increase travel speed. Tighten jam nut after adjustments are complete.

NOTE: Tractors with flow control valves. Make row marker speed adjustment with tractor flow controls in maximum position. After row marker speed is set, adjust tractor flow controls to allow hydraulic control to stay in detent during marker raise or lower cycle.

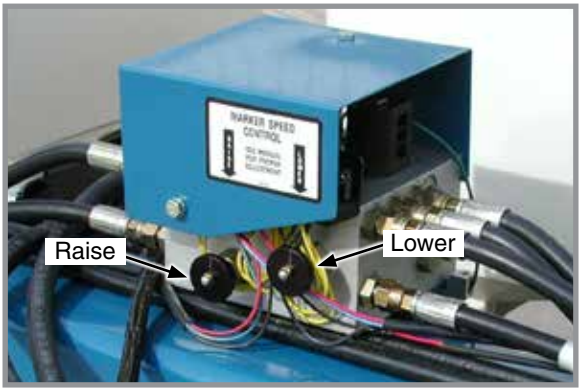

Row marker speed control adjustment

NOTE: Hydraulics operate slowly when oil is cold. Make all adjustments with oil warm.

NOTE: On a tractor where oil flow cannot be controlled, tractor flow rate may be greater than rate marker cylinder can accept. Hold tractor hydraulic control lever until cylinder reaches end of its stroke. This occurs most often on tractors with an open center hydraulic system.

ROW MARKER CHAIN ADJUSTMENT

Uncontrolled marker movement can cause death or serious injury. set marker switch OFF and shut off tractor prior to adjustment.

NOTE: Operate two-fold or three-fold row markers with the tractor's hydraulic valve in float position.

Chain adjustment is critical. Adjust chain with second stage of marker in vertical position and first stage in horizontal position.

Chain must be adjusted so third stage of marker is pulled out as soon as second stage begins outward travel. Chain stretches with use and needs routine adjustment. It may be necessary to twist chain for a finer adjustment.

Marker chain is PROPERLY ADJUSTED if marker blade pushes dirt 12" or less as marker completes fold into field operating position. Chain should have some slack when marker is in field operating position.

Marker chain is TOO LOOSE and should be adjusted if marker blade pushes dirt more than 12" as it completes the fold into field operating position.

Marker chain is TOO TIGHT if it will not allow marker blade to follow ground contour and chain is tight when marker is in field operating position.

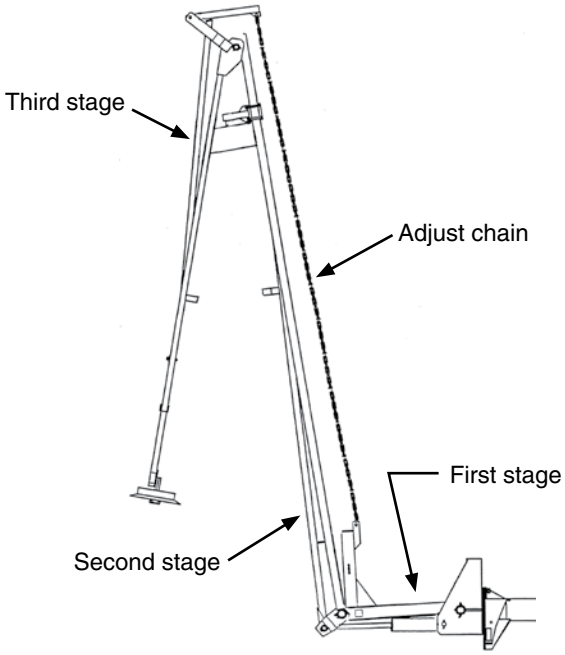

ROW MARKER LENGTH AND DISC BLADE ADJUSTMENT

1. Multiply number of rows by the average row spacing in inches to determine total planting width.

Row Marker Lengths	
24 Row 20"	480" (1,219.2 cm)
24 Row 22"	528" (1,341.12 cm)
24 Row 30"	720" (1,828.8 cm)
36 Row 20"	720" (1,828.8 cm)

2. Lower planter and row marker assembly to ground.

3. Measure from planter center line to a point where blade contacts ground.

4. Adjust row marker extension so distance from marker disc blade to center line of planter is equal to total planting width. Adjust right and left row marker assemblies equally and securely tighten clamping bolts.

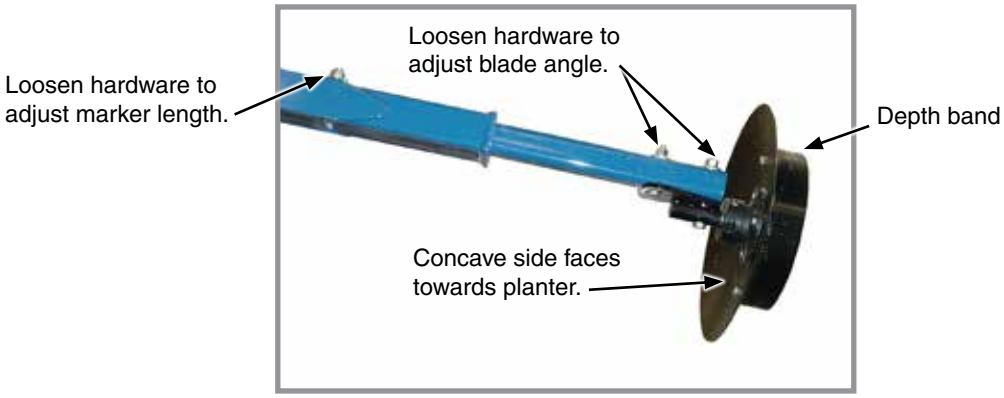

Row marker disc blade angle adjustment

NOTICE

Setting marker disc blade assembly at a sharper angle than needed adds stress to row marker assembly and shortens bearing and blade life. Set blade angle only as needed to leave a clear mark.

Marker disc blade is installed with concave side facing inward. Spindle assembly is slotted so hub and blade can be angled to throw more or less dirt.

5. Loosen hardware and move assembly as required.

6. Tighten bolts to specified torque.

7. Do a field test to ensure markers are properly adjusted.

NOTE: A notched marker blade is available from Kinze through your Kinze Dealer for use in more severe no till conditions.

VACUUM SYSTEM

Kinze vacuum seed metering system includes seed meters, seed discs, and an air system consisting of a hydraulic driven vacuum fan which draws air through manifolds, hoses, and seed meters on each row unit.

WARNING

Moving fan blades can cause amputation or severe injury. Never operate vacuum fan with cover removed.

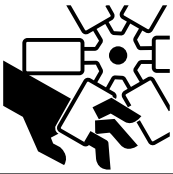

VACUUM FAN VALVE BLOCK ASSEMBLY

A pressure relief valve prevents build up of oil pressure over 35 PSI in case drain line when vacuum fan motor is operating. This valve vent oils outside through a drain hole in aluminum valve block. This can occur whenever case drain is improperly connected or pressure in motor circuit builds.

Valve block contains a check valve that prevents vacuum fan from operating in wrong direction if pressure is applied to return side of motor and allows fan to coast to a stop when tractor hydraulic control is returned to neutral position.

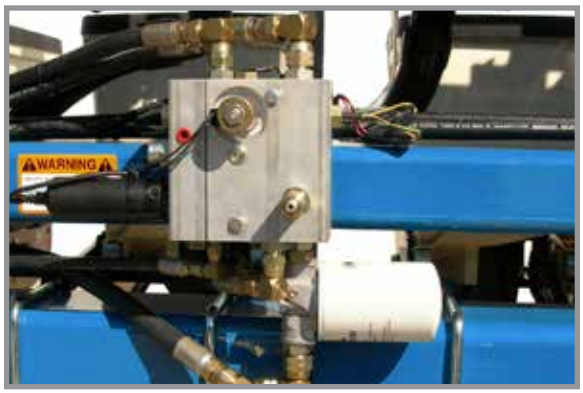

Vacuum fan valve block

See “Hydraulic Schematic (Vacuum Fan System)” in Lubrication and Maintenance section.

NOTE: Fan turns at a reduced speed If reverse pressure is applied.

ANALOG VACUUM OR PRESSURE GAUGE

Analog vacuum or pressure gauge connects directly to vacuum meter (vacuum) or bulk fill (pressure) manifold and is teed into digital sending units.

Only adjustment is to “zero” needle with no vacuum or pressure present. If there is a significant difference between gauge and a reading taken at meters, a different manifold location should be found to connect hose to gauge and digital sending unit.

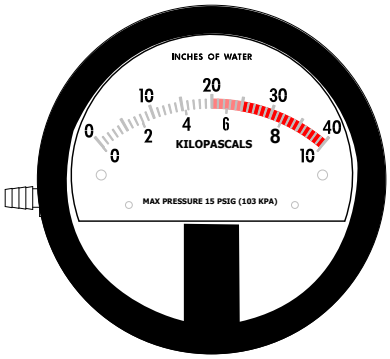

Analog Gauge

NOTE: Analog gauges are identical EXCEPT for plug and hose barb locations in side of gauge housing. DO NOT connect vacuum meter or bulk fill hose to wrong gauge. Check plug and hose barb installation if readout is erratic or appears inaccurate.

BULK FILL SYSTEM

WARNING

Do not remove lid during machine operation. Contents are pressurized and could result in death, serious injuries or equipment damage.

Review operator manual for proper filling procedure.

CAUTION

Seed flying out of disconnected delivery tube at high velocity can cause injury. Do not disconnect delivery tubes when system is operating.

DANGER

DO NOT ENTER. Hazardous conditions inside will result in death or serious injury. Follow OSHA confined space procedures.

NOTICE

Foreign materials can plug system. Make sure seed is clean and free of debris when filling bulk fill hoppers.

NOTICE

Do not turn on system with tractor engine at full speed or system damage may occur.

NOTICE

Do not operate bulk fill system above maximum system operating pressure of 20 inches of water or seed bridging may occur.

1. **Before filling hoppers refer to "Row Unit Operation" for additives information.** Fill hoppers with seed, latch lids, and secure with pin.

2. Start bulk fill system with tractor engine at idle.

3. Increase engine speed to full and set initial system pressure using flow control valve.

4. Allow system to warm up and adjust pressure if necessary.

Bulk Fill Lid

Recommended pressures:

- Corn – 12 inches of water (29mBar)
- Soybeans – 10 inches of water (25mBar)
- Actual pressure needed is affected by seed size, shape, and coating.

BULK FILL ENTRAINER ACCESS

1. Shut down bulk fill system.

2. Loosen wing nut and turn retainer holding shutoff door in its storage location.

3. Remove rubber plug closest to area in entrainer needing attention.

4. Insert shutoff door into open slot and push into entrainer at a slight upward angle.

5. When work is complete, remove shutoff door, return door to storage location, and plug open slot.

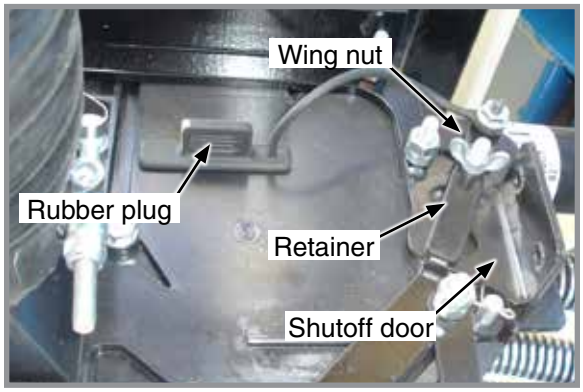

Bulk fill entrainer (end view)

BULK FILL TANKS - CLEAN OUT

Cleanout chute storage location

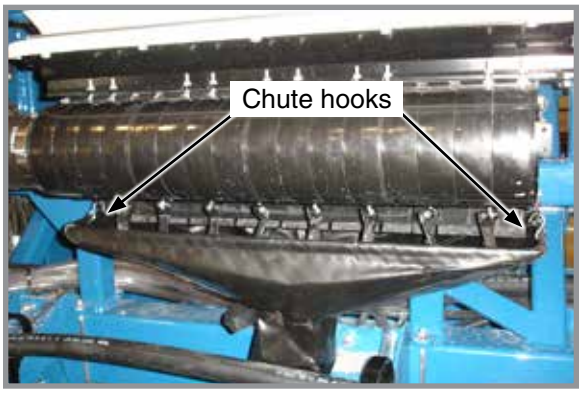

Cleanout chute installed

1. Remove bulk fill tank cleanout chute from storage location under L.H. bulk fill tank.
2. Position tube of chute under entrainer and attach hooks on each end of entrainment assembly.
3. Open cleanout doors and empty tank.
4. Close all cleanout doors and return cleanout chute to storage location.

BULK FILL SCALE PACKAGE OPTION

NOTICE **High-pressure water can damage display. Remove display before power washing planter.**

NOTICE **Remove and store display at end of planting season. Damage from sun and weather exposure may result.**

- Provides seed weight or estimated acres remaining for each bulk fill hopper.
- Displays total (gross) seed weight or estimated acres remaining for both hoppers combined.
- Warns operator when seed goes below a pre-defined level (when using a Kinze Vision display).

Operation of bulk fill scale package display is controlled by buttons located on its face:

- Two screen-defined selection buttons.
- Backlight ON/OFF button.
- UP/DOWN arrow buttons.
- Screen position is changed by loosening thumb screw on mount at back of monitor and repositioning screen.

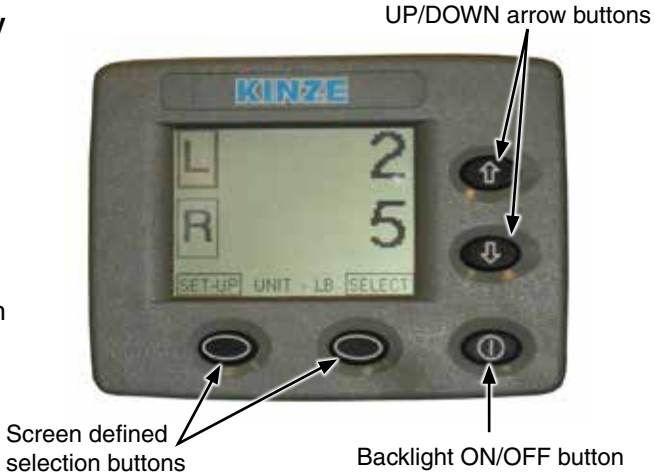

SETUP BULK FILL SCALE PACKAGE DISPLAY

1. Press SET-UP button.

2. First setup screen displays and ALARM LEVEL box is highlighted.

3. Press SELECT button.

4. Press UP or DOWN arrows to change alarm weight level. Select BACK to save changes.

5. Press UP or DOWN arrows to highlight WEIGHT/ACRE MODE box. Press SELECT button.

6. Press UP or DOWN arrow buttons to toggle between weight or acre mode. This selection affects if values are displayed as pounds or estimated acres of seed remaining. Press BACK to save changes.

7. Press DOWN arrow to select second set-up screen.

NOTE: CALIBRATION# and SETUP# are automatic and do not need to be changed.

8. Select CONTRAST or BACKLIGHT. Use UP or DOWN arrow buttons to change levels. Press BACK to save changes.

9. Select BACK to return to main screen.

MONITOR SEED LEVELS

1. Main screen displays information for left and right hoppers.
2. Select L or R for individual hopper status information.
3. Select BACK to return to main screen.
4. Press down arrow once or twice for GROSS screen to appear.
   This provides combined status information for both hoppers.
5. Press down arrow again to return to main screen.

ENTER SEED INFORMATION

1. Highlight and select either L (left) or R (right) for the appropriate input screen.
2. At input screen, L or R side is indicated at left side of screen and seed weight or acres remaining is on right side.

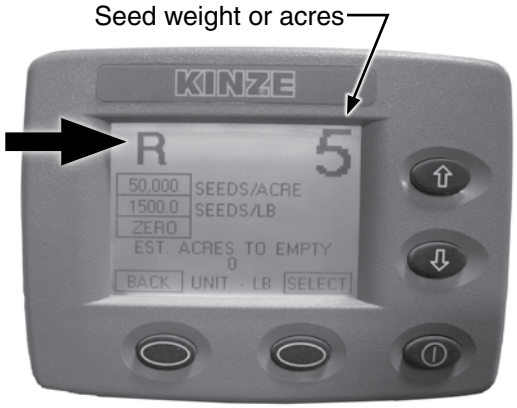

3. Press arrow keys to select desired box; press SELECT to darken and use arrow keys to change.

NOTE: Seed information entered must be accurate for remaining estimated acres to calculate correctly.

- SEEDS/ACRE is population rate.
- SEEDS/LB value comes from seed specifications.
- ZERO is selected to zero hopper that is selected.

4. Select BACK to return to main screen.

AG LEADER INTEGRA DISPLAY

Integra is a full-featured hub of any precision farming operation. A large, full-color 12.1" HD touchscreen display is easy to read and offers powerful, year-round precision farming tools. Mapping, planter and application control, yield monitoring, real-time data logging, and more – are all controlled from the cab using the Integra display.

Four video camera inputs provide operators a better view of equipment operation and safety by allowing them to view live video on the display.

NOTE: See Integra Operator Manual for installation and programming.

Ag Leader Integra display

PLANTER MONITOR MODULE (PMM)

PMM Magnetic Distance Sensor Package includes a planter-mounted module enclosure with cover and mounting hardware, seed tubes w/sensors, planter harness, planter monitor cable, shaft rotation sensors and magnetic distance sensor components.

Ag Leader Integra display and associated cab harnesses are also required.

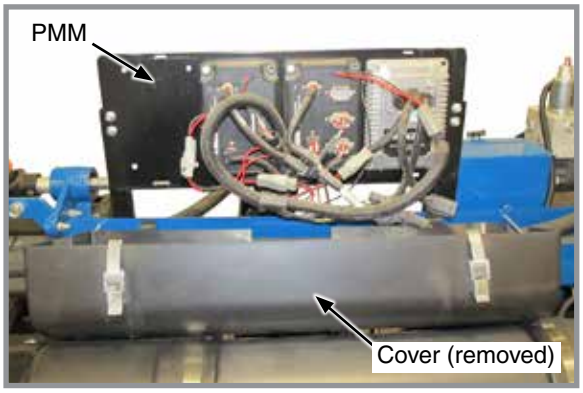

Planter Monitor Module (PMM)

KINZE ISOBUS OPTION

Kinze ISOBUS option consists of a planter monitor module (PMM), and planter control module (PCM). Kinze planters will communicate directly with most ISO compatible monitors. See the Kinze ISOBUS manual for more information.

POINT ROW CLUTCHES

Single point row clutch control box

Point row clutch

Electric-activated clutches disengage drive on either half of planter for finishing up fields or for long point row situations. Clutch selector switch is located on tractor control box.

NOTICE	**Switch must be OFF when planter is not in use or tractor battery will be drained.**

NOTE: Liquid fertilizer piston pump has its own drive wheel and is not affected by point row clutch.

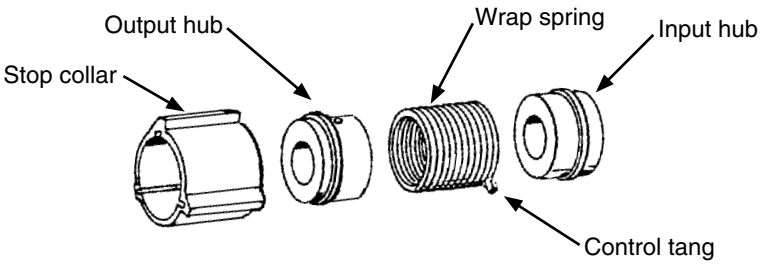

Clutch consists of a wrap spring riding on an input and output hub. Wrap spring is wrapped tightly over hubs during operation locking them together. Higher speeds create a tighter grip of spring on hubs.

Input end of spring is bent outward and is called the control tang. Control tang fits into a slot in stop collar located between input and output hubs over wrap spring. If stop collar is allowed to rotate with input hub, clutch is engaged. If stop collar is stopped from rotating, control tang connected to it is forced back and spring opens. This allows input hub to continue rotating without transmitting torque to output hub, stopping planter drive.

Stop collar is controlled by an electric solenoid and an actuator arm. When selector switch on tractor control box is OFF, solenoid coil is NOT ENERGIZED and actuator arm will not contact stop on stop collar, allowing it to rotate with hubs and drive planter.

When operational switch is in “DISENGAGE” (right or left) solenoid coil IS ENERGIZED and plunger in solenoid coil pulls actuator arm against stop on stop collar, disengaging wrap spring and stopping planter drive.

TWO-SPEED POINT ROW CLUTCHES

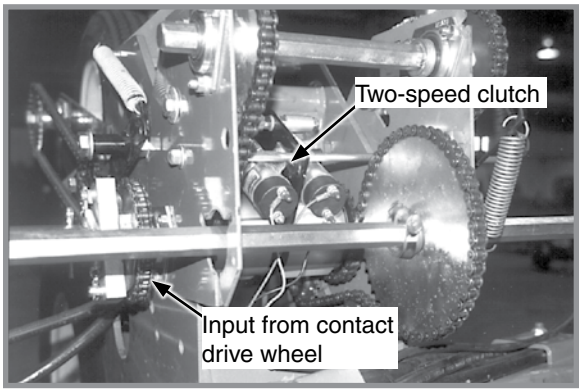

Two-speed point row clutch

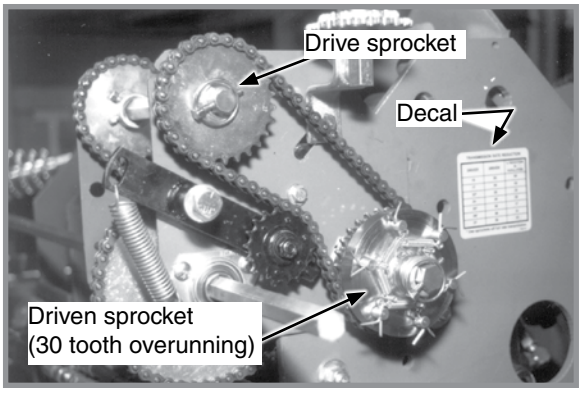

Two-speed point row clutch driven sprockets

Optional Two-Speed Point Row Clutch Package allows on-the-go population rate adjustment and capability to shut off either half of planter for finishing up fields or for long point row situations.

Population reduction ratio is determined by sprocket ratio between wheel module extension drive and driven sprockets. A rate reduction decal is located on wheel module extension.

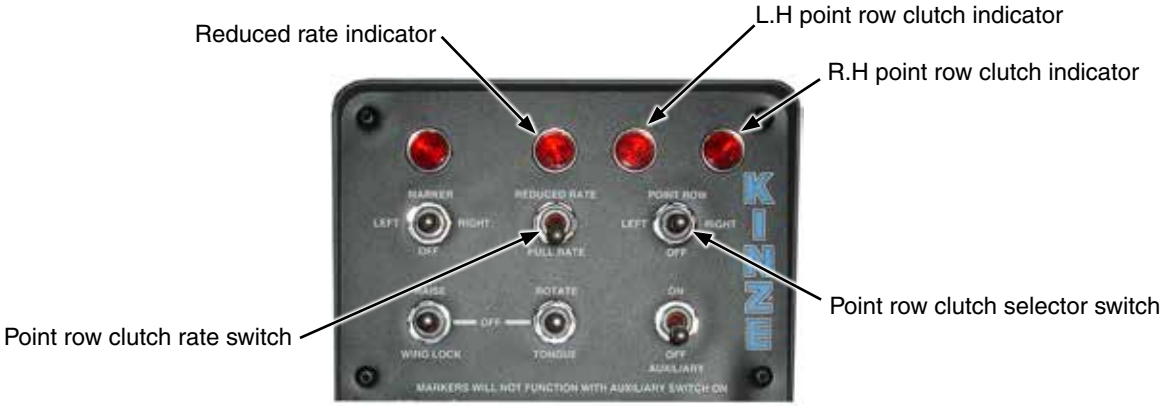

Two-speed point row clutch control box

Point row clutches are controlled by control console point row clutch switches. The point row switch shuts off left or right half of planter. Activating reduced rate switch engages one solenoid on each clutch assembly and reduces planting rate for entire planter.

NOTICE	**Point row switch must be OFF and rate switch left in FULL RATE when planter is not in use or tractor battery will be drained.**

NOTE: Liquid fertilizer piston pump has its own drive wheel and is not affected by point row clutch.

PISTON PUMP

NOTE: Keep manuals shipped with pump and flow divider with this manual.

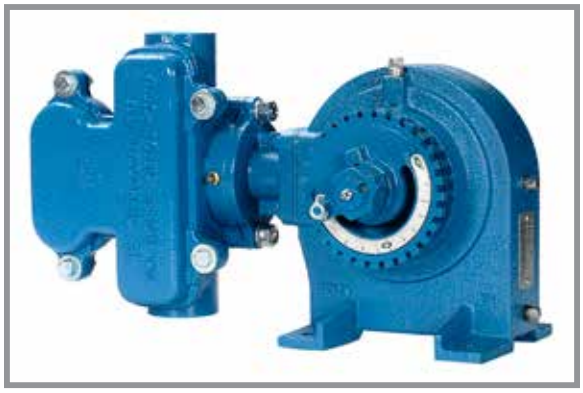

Piston pump

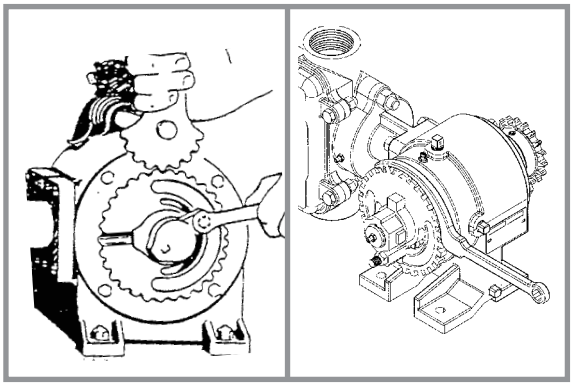

Adjusting delivery rate

NOTE: Delivery rate chart in Rate Chart section of this manual provides approximate application rate only. Delivery varies with temperature and fertilizer.

Loosen ⅜" lock nut that secures arm with pointer and rotate scale flange with adjustment wrench until pointer is over desired scale setting. Tighten ⅜" lock nut. DO NOT OVERTIGHTEN.

NOTE: Periodically check flow to all rows. Set rate is delivered to remaining rows if one or more lines are plugged.

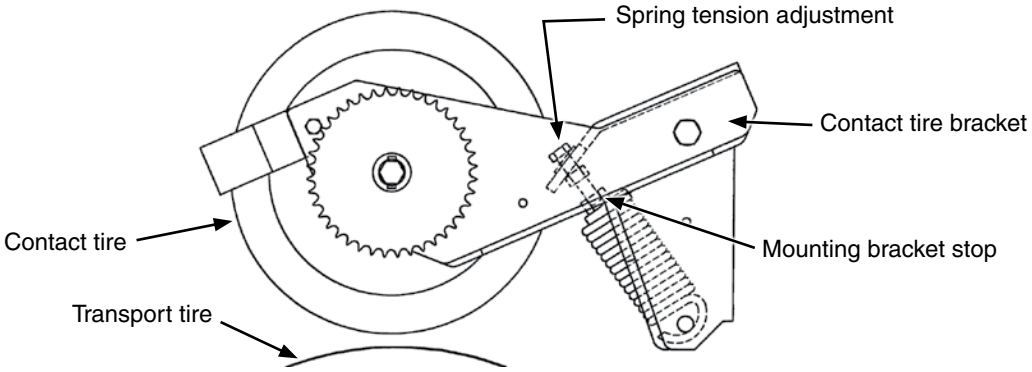

Set piston pump drive spring tension so there is no slack in springs when contact tire bracket is resting on mounting bracket stop. Contact tire and transport tire should not be touching.

CLEANING

Clean tanks, hoses, and metering pump thoroughly with water at end of planting season or prior to an extended period of non-use. Do not allow fertilizer to crystallize from cold temperature or evaporation.

On machines equipped with piston pump, take apart and clean strainer located between piston pump and ball valve daily. Remove the end cap to clean the screen. See Piston Pump Storage in Maintenance Section of this manual.

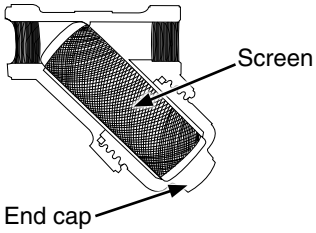

CHECK VALVES

Old style non-reparable check valve

New style reparable check valve

Optional low rate check valves are available for in-line installation between liquid fertilizer piston pump and openers to ensure equal distribution of product at low rates. Check valves eliminate anti-siphon loops.

LOW-RATE (POP-UP) LIQUID FERTILIZER SYSTEM

Check flow out of each row frequently to ensure orifices have not been plugged.

If fluid is allowed to sit in the lines overnight and the temperature drops below 32 degrees fahrenheit (0 Celsius) it is recommended that the orifices be removed and the lines be flushed before continuing operations. Many fertilizers can salt out in temperatures under 32 degrees fahrenheit (0 Celsius) and clog oricfices.

REAR TRAILER HITCH (24 ROW 30" ONLY)

Trailer hitch

Hitch position during lift

Rear trailer hitch is used to tow a 3 or 4 wheel wagon behind planter. Hitch height during field operation and transport is 15" (38 cm). Hitch height will raise to approximately 42" (107 cm) when planter is lifted.

NOTICE

Rear trailer hitch is designed for use with piston pump only. Maximum allowable hitch weight is 200 lb (90.71 kg). Do not exceed 6,000 lb (2,721.55 kg) gross towing weight or the equivalent of a loaded 500 gal (1,892.7 L) tank and running gear or equipment can be damaged.

NOTE: Periodically check feed hose for kinks to prevent restricted delivery rate.

Adjust rear trailer hitch length by loosening the ⅝" set screws at rear of outer tube, removing 1" x 8 ½" bolt at center of hitch, and sliding hitch in or out to one of 4 sets of adjustment holes. Reinstall and tighten hardware.

FIELD TEST

Perform a field test with any change of field and/or planting conditions, seed size or planter adjustment to ensure proper seed placement and operation of row units.

- ❒ Check planter for front to rear and lateral level operation. See “Level Planter”.
- ❒ Check **all** row units to be certain they are running level. Row unit parallel arms should be approximately parallel to the ground when planting.
- ❒ Check row markers for proper operation and adjustment. See “Row Marker Speed Adjustment”, "Row Marker Chain Adjustment", and “Row Marker Length and Disc Blade Adjustment”.
- ❒ Check for proper application rates and placement of granular chemicals on **all** rows. See “Field Check Granular Chemical Application”.
- ❒ Check for desired depth placement and seed population on **all** rows. See “Field Check Seed Population”.
- ❒ Check for proper application rates of fertilizer on **all** rows. See “Fertilizer Application Rate Chart”.

Reinspect machine after field testing.

- ❒ Hoses And Fittings
- ❒ Bolts And Nuts
- ❒ Cotter Pins And Spring Pins
- ❒ Drive Chain Alignment

FIELD CHECK SEED POPULATION

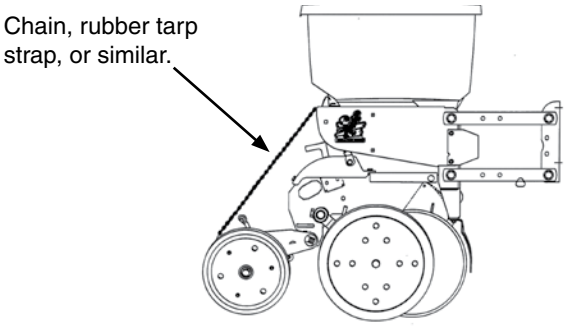

1. Tie up one or more sets of closing wheels by running a chain or rubber tarp strap between the hopper support panel and closing wheels. It may be necessary to decrease closing wheel arm spring tension.

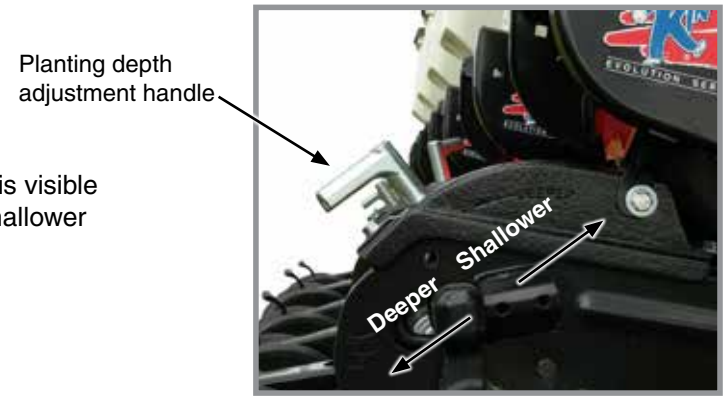

Planting depth adjustment

2. Plant a short distance and check to see if seed is visible in the seed trench. Adjust planting depth to a shallower setting if seed is not visible and recheck.

3. Measure 1/1000 of an acre (hectare). See chart for correct distance for row width being planted. For example, if planting 30" (76 cm) rows 1/1000 of an acre (hectare) would be 17' 5" (13.12 m).

1/1000 Acre Seed Population Count Row Width/Distance			
Row Width	20"	22"	30"
Distance	26'2" (797.56 cm)	23'9" (723.9 cm)	17'5" (581.66)

NOTE: Seeds may bounce or roll when planting with closing wheels raised and planting depth set shallow affecting seed spacing accuracy.

4. Count seeds in measured distance.

5. Multiply number of seeds placed in 1/1000 of an acre (hectare) by 1000. This gives total population.

EXAMPLE: 30" (70 cm) row spacing 17' 5" (14.28 m) equals 1/1000 acre.

26 seeds counted x 1000 = 26,000 seeds per acre

Seed count can be affected by drive wheel and seed meter drive ratio, tire pressure, and/or seed meter malfunction.

1. If seed check shows average distance between seeds in inches is significantly different than seed rate chart indicates, first check drive ratio between drive wheel and seed meter. Check drive wheel air pressure, check for incorrect sprocket(s) in driveline and check drive and driven sprockets on transmission(s) for proper selection.

2. Check for seed meter malfunction. For example, if spacing between kernels of corn at the transmission setting being used is 8" (20 cm) and a gap of 16" (40 cm) is observed, a finger has lost its seed and not functioned properly. If two seeds are found within a short distance of each other, finger has metered two seeds instead of one.

3. See “Seed Meter (Finger Pickup) Troubleshooting” or “Seed Meter (Brush-Type) Troubleshooting” in Troubleshooting Section of this manual.

DETERMINING POUNDS PER ACRE (BRUSH-TYPE METER)

Seeds per acre ÷ Seeds per pound (from label) = Pounds per acre

If seeds per pound information is not available use the following averages:
2,600 seeds per pound for medium size soybeans
15,000 seeds per pound for medium size milo/grain sorghum
4,500 seeds per pound for medium size cotton

DETERMINING BUSHELS PER ACRE

Pounds per acre ÷ Seed unit weight = Bushels per acre

Average Unit Weight of:
1 Bushel Soybeans = 60 Pounds (27.2 kg)
1 Bushel Milo/Grain Sorghum = 56 Pounds (25.4 kg)
1 Bushel Cotton = 32 Pounds (14.5 kg)

If seed population check shows planting rate is significantly different than seed rate chart shows or if a particular meter is not planting accurately, see “Brush-Type Seed Meter Maintenance” and “Seed Meter (Brush-Type) Troubleshooting”.

FIELD CHECK GRANULAR CHEMICAL APPLICATION

Temperature, humidity, speed, ground conditions, flowability of different material, or meter obstructions can affect granular chemical rate of delivery.

WARNING

Agricultural chemicals can cause death or serious injury to persons, animals, and plants or seriously damage soil, equipment, or property. Read and follow all chemical and equipment manufacturers labels and instructions.

Perform a field check to determine application rates.

1. Fill insecticide and/or herbicide hoppers.
2. Attach a calibrated vial to each granular chemical meter.

NOTE: Disengage clutch to avoid dropping seed during test.

3. Lower planter and drive 1320 feet (402 meters) at planting speed.
4. Weigh chemical in ounces caught in one vial.
5. Multiply that amount by factor shown to determine pounds (kilograms) per acre (hectare).

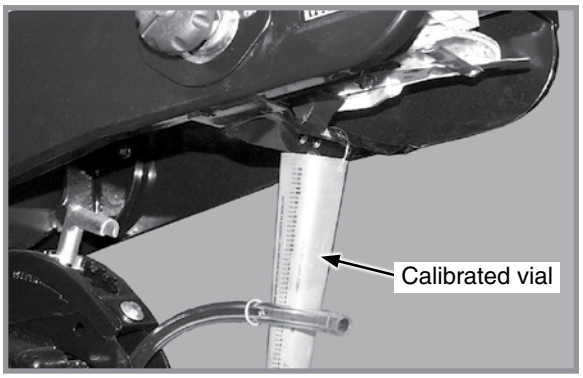

Granular chemical field check

Pounds (Kg) Per Acre (Hectares)	
Row Width	**Factor**
20"	1.25 (0.0498)
22"	1.13 (0.0446)
30"	0.83 (0.0328)

EXAMPLE: You are planting 30" rows. You have planted for 1320 feet (402 meters) at desired planting speed. You caught 12.0 ounces of chemical in one vial. 12.0 ounces times 0.83 equals 9.96 pounds per acre.

NOTE: Check calibration of all rows.

METERING GATE

Use metering gate setting as a starting point for distributing insecticide or herbicide. Charts are based on 5 mph (8 kph) planting speed. Use a higher gate setting for speeds faster than 5 mph (8 kph) and a lower setting for speeds slower than 5 mph (8 kph).

WATER TANK

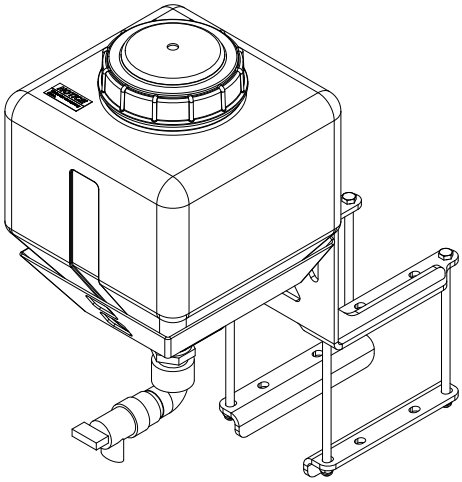

The water tank is to only be filled with clean water or preferably potable water (water meeting local standards for drinking). The tank holds 4 gallons (15 L) of water. Be sure to check for regulations pertaining to this use. Tank should be filled with new water at the beginning of each planting season and drained at the end of each planting season.

NOTICE

Drain tank if environmental conditions are 32° Fahrenheit (0° Celsius) or below to prevent tank from cracking.

The water tank is to be used in the event of an accidental exposure to chemical. Chemicals are supplied with Material Safety Data Sheets (MSDS) that provide full information about the chemical, its effects on exposure, and first aid needs in the event of an emergency. Keep your MSDS file up-to-date and available for first responders in case of emergency.

If the water tank is used seek medical assistance immediately for further treatment.

This page intentionally left blank.

PLANTING DEPTH

Planting depth is maintained by adjustable row unit gauge wheels. Depth adjustment range is approximately ½" to 3½" (1.2 to 8.8 cm).

1. Raise planter to remove weight from wheels.
2. Push down on depth adjustment handle and reposition it forward to decrease or rearward to increase planting depth. Initially adjust all units to the same setting.
3. Lower planter and check operation and planting depth of all row units. Readjust individual rows as needed for uniform operation.

Planting depth adjustment

"V" CLOSING WHEEL ADJUSTMENT (RUBBER OR CAST IRON)

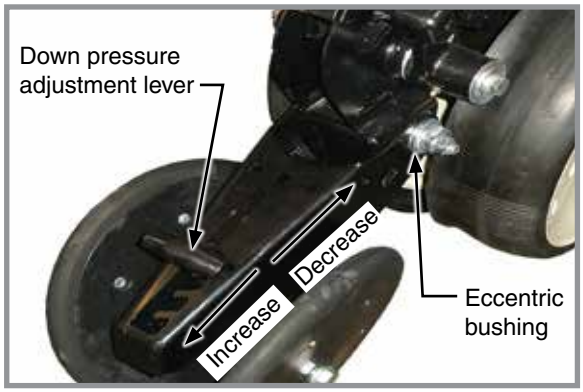

"V" Closing wheel adjustments

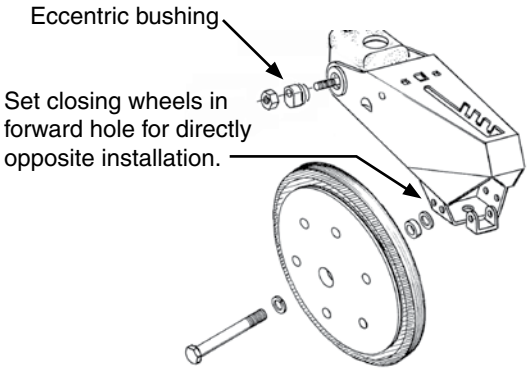

"V" closing wheels should have enough down pressure to close the seed trench and ensure good soil to seed contact. Move 5-position quick adjustable down force lever on the top of closing wheel arm to the rear to increase closing wheel spring pressure. Move lever forward to decrease pressure. Adjust all row units to a similar setting. Light soil usually requires less down force at average depth, approximately 2" (5 cm), while heavy soil requires increased down force.

Eccentric bushings in the wheel arm stop allow for lateral adjustment of the "V" closing wheel assembly. Use a ¾" wrench to loosen hardware attaching closing wheel arm to wheel arm stop. Use another ¾" wrench to turn eccentric bushings until **closing wheels are aligned with seed trench**. Tighten hardware.

Closing wheels can be installed "offset" (to improve residue flow) or "directly" opposite. Use forward installation holes If set "directly" opposite.

CLOSING WHEEL SHIELD (RUBBER OR CAST IRON "V" CLOSING WHEELS)

Optional closing wheel shield is installed on underside of closing wheel arm to help prevent root balls and stalks from clogging closing wheels.

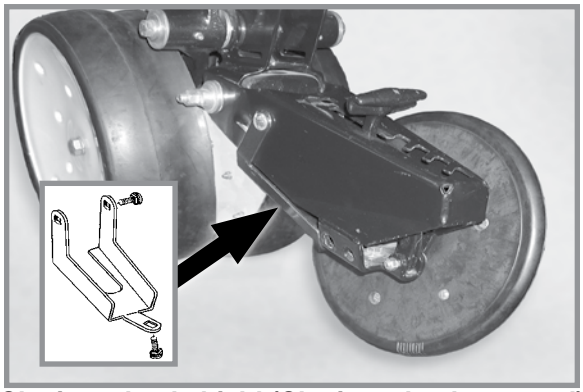
Closing wheel shield (Closing wheel removed)

DRAG CLOSING ATTACHMENT

Drag closing attachment pulls loose soil over seed trench.

NOTE: Use of a seed firming wheel or other seed firming device is recommended with drag closing attachment.

Front and rear adjustment is made using slotted holes in blades. Adjust all rows the same. Wheel arm stop eccentric bushings provide lateral adjustment. Use a ¾" wrench to loosen closing wheel arm to wheel arm stop hardware. Use another ¾" wrench to turn eccentric bushings until drag closing attachment is aligned with seed trench. Tighten hardware.

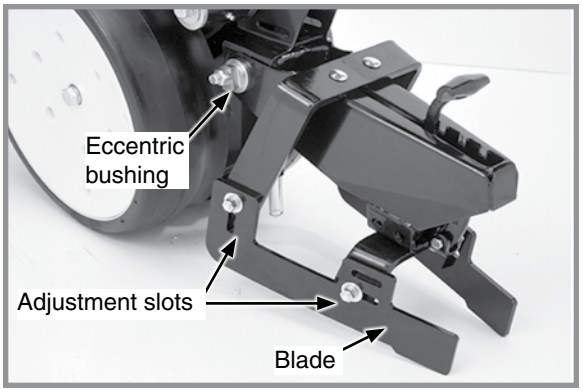

Drag closing attachment

COVERING DISCS/SINGLE PRESS WHEEL ADJUSTMENT

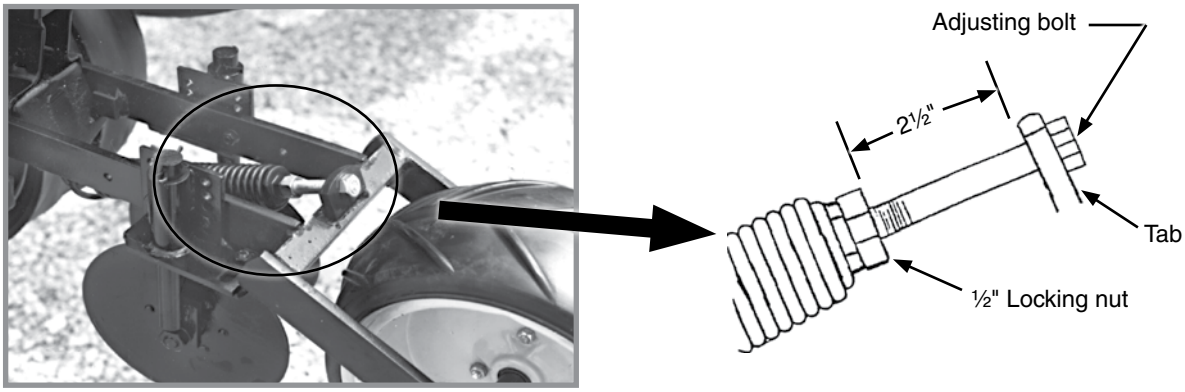

Press wheel down force adjustment

Check operation of covering discs/single press wheels after adjusting planting depth. Initial press wheel down force spring setting is 2½" (6.3 cm) between mounting arm tab and locking nut. Loosen ½" locking nut and turn adjusting bolt in to increase down force or out to decrease down force. Tighten locking nut against spring plug. Adjust all row units to a similar setting.

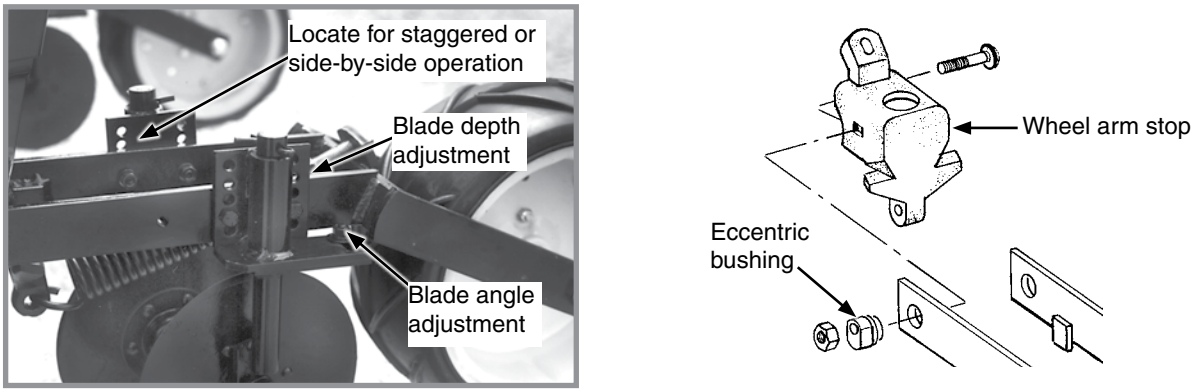

Covering disc adjustments

Eccentric bushings in the wheel arm stop allow for lateral adjustment of covering discs/single press wheel assembly. Use a ¾" wrench to loosen hardware attaching closing wheel arm to wheel arm stop. Use another ¾" wrench to turn eccentric bushings until covering discs/single press wheel assembly is aligned with seed trench. Tighten hardware. Two sets of holes in mounting arm locate covering discs for staggered or side-by-side operation. Five sets of holes in each disc bracket allow ½" incremental blade depth adjustment. Slotted holes in disc mount and bracket allow for 0° - 15° blade angle adjustment. Adjust covering discs on all row units to similar settings.

SEED HOPPERS

Mechanical seed hopper has a capacity of 1.9 bushels.

Vacuum seed hopper has a capacity of 1.75 bushels.

Use clean seed and make certain there are no foreign objects inside when filling seed hopper. **Replace hopper lids after hoppers are filled to prevent accumulation of dust or dirt in seed meter which can cause premature wear.** See “Finger Pickup Seed Meter” , “Brush-Type Seed Meter”, or Vacuum Seed Meter".

Periodically empty hoppers completely to remove any foreign objects and to ensure proper seed meter operation.

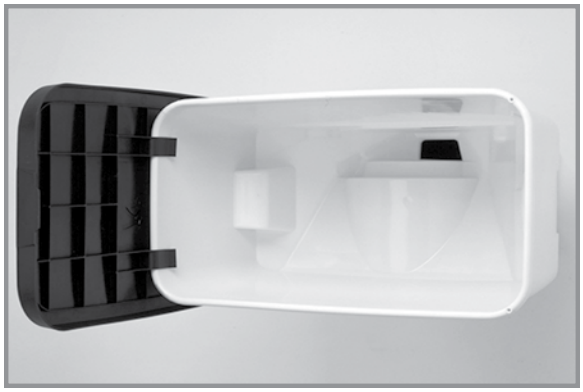

Mechanical seed hopper

Disengage meter drive and hopper latch and lift hopper off hopper support. See “Seed Meter Drive Release”.

SEED METER DRIVE RELEASE

A clutch release mechanism disengages seed meter drive from seed meter to remove seed hopper or prevent meter from operating. Releasing drive allows operator to check granular chemical application rates without dropping seed. It also allows one or more rows to be disconnected when finishing fields.

Turn knob ¼ turn counterclockwise to release or ¼ turn clockwise to engage drive.

Seed meter drive release

ROW UNIT EXTENSION BRACKETS

Row unit extension brackets extend row units rearward 4" to provide clearance for coulter mounted residue wheels and HD single disc fertilizer openers.

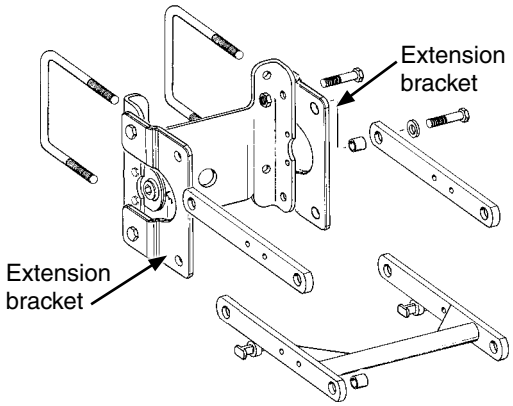

Row unit extension brackets

ROW UNIT CHAIN ROUTING

Row unit drive chains must be properly tensioned and aligned for proper operation and to minimize wear.

Inspect and replace weak, worn or broken springs, idlers, and idler bushings.

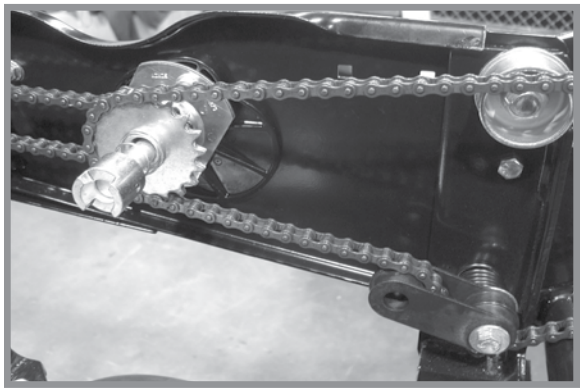

Mechanical pull row unit meter drive

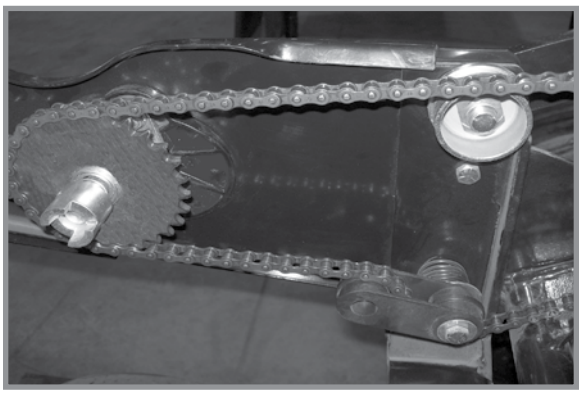

Vacuum pull row unit meter drive

Row unit granular chemical drive

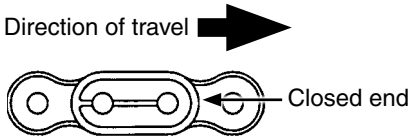

NOTE: Install connector link with closed end facing direction of travel.

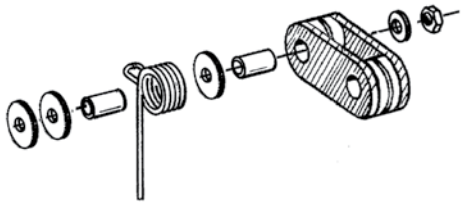

NOTE: Reverse idler when worn on one side for extended use.

QUICK ADJUSTABLE DOWN FORCE SPRINGS OPTION (STANDARD OR HEAVY DUTY)

Standard and heavy duty quick adjustable down force springs are available in increase penetration in hard soil and keep row unit from bouncing in rough field conditions. Two springs per row, one on each side parallel arms, are used unless equipped with row unit mounted no till coulters. Row unit mounted no till coulters require four springs per row.

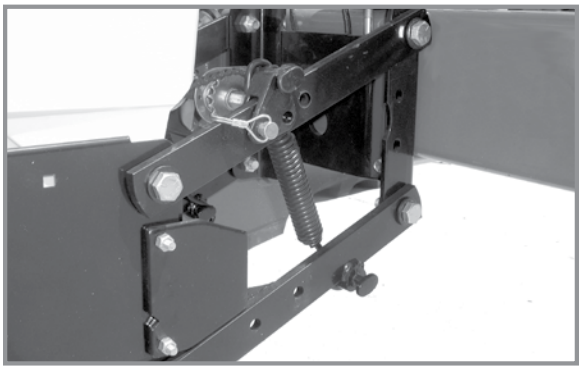

Two springs per row (Dual)

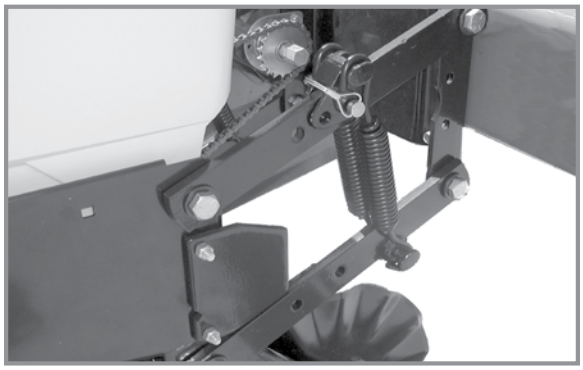

Four springs per row (Quad)

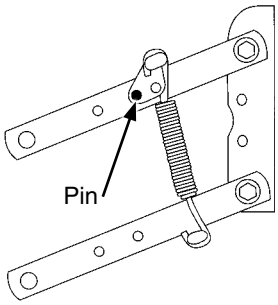

Position 1 (Least)

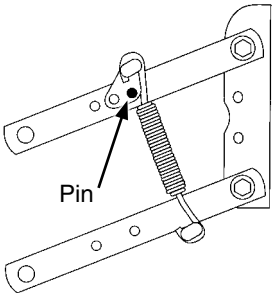

Position 2

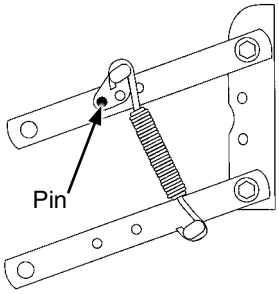

Position 3

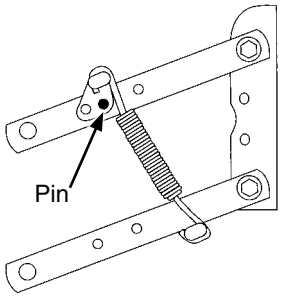

Position 4 (Most)

There are four positions to set down pressure spring tension.

Standard and Heavy Duty Spring Down Force Pressure*				
	2 Springs		4 Springs	
Position	**Standard D8249**	**Heavy Duty D21337**	**Standard D8249**	**Heavy Duty D21337**
1	41lb (18.6 kg)	43 lb (19.5 kg)	74 lb (33.6 kg)	80 lb (36.3 kg)
2	73 lb (33.1 kg)	86 lb (39.0 kg)	120 lb (54.4 kg)	144 lb (65.3 kg)
3	136 lb (61.7 kg)	167 lb (75.7 kg)	255 lb (115.7 kg)	307 lb (139.3 kg)
4	207 lb (93.9 kg)	249 lb (113.0 kg)	369 lb (167.4 kg)	470 lb (213.2 kg)
*Pressure does not include weight of row unit, seed, or options.				

NOTICE

Springs must be installed with open side of spring hooks toward seed hoppers to prevent binding on spring mount adjustment pins.

1. Raise planter and remove spring mount pin at top of spring.
2. Slide mount to desired position and install pin.

NOTE: Adjust springs for field conditions. Too much down pressure in hard field conditions can cause row units to lift planter and keep drive wheels from making contact. Too much down pressure in soft field conditions can cause row unit to run too deep.

PNEUMATIC DOWN PRESSURE

Row unit down pressure can be adjusted on-the-go as field conditions change. A cab-mounted control box adjusts pressure (Older models may have a digital readout). Two planter-mounted 12 VDC air compressors with 3 gallon capacity air tank supplies air for the down pressure system.

Pull row unit air spring

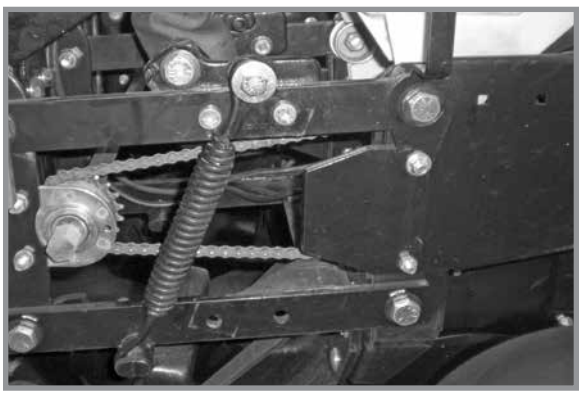

Pull row unit assist springs

Packages include upper and lower air spring mounting castings for pull row units, 150 psi rated air springs, ⅜" O.D. nylon hoses, dual solenoid air valve and stainless steel, 160 psi, 2" liquid-filled gauge and planter wiring harness.

Pneumatic down pressure row unit extension brackets are required in some applications.

NOTE: Assist springs are available through your Kinze dealer if additional down pressure is needed. One spring is installed on outer side of parallel arms on each side of row unit.

FIELD OPERATION

NOTE: Adjust down pressure with planter lowered and row openers in ground for most accurate adjustment. Pressure can be adjusted from tractor using control console, or at planter using manual control valves on compressor assembly.

Control console

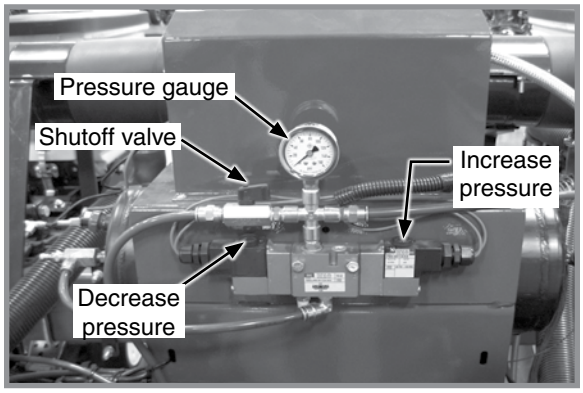

Air compressor assembly controls

ADJUST DOWN PRESSURE FROM CAB

Push toggle switch left to increase or right to decrease pressure.

ADJUST DOWN PRESSURE AT PLANTER

Push and hold decrease or increase button on compressor assembly to decrease or increase pressure.

NOTE: Value on the air pressure gauge is NOT down pressure force. Multiply air pressure (psi) by four (4) to calculate down pressure.

BRUSH-TYPE SEED METER

	Crop	Disc Color-Code (Disc Part No.)	Upper Brush Retainer	Cells	Seed Size Range	*Lubricant
	Soybean	Black (GA5794)	GD11122	60	2200 to 4000 seeds/lb. (4,840 to 8,800 seeds/kg)	**Graphite** Talc
	Specialty Soybean	Dark Blue (GA6184)	GD11122	48	1400 to 2200 seeds/lb. (3,080 to 4,840 seeds/kg)	**Graphite** Talc
	Small Milo/Grain Sorghum	Red (GA5982)	GD8237	30	14,000 to 20,000 seeds/lb. (30,800 to 44,000 seeds/kg)	Talc
	Large Milo Grain Sorghum	Light Blue (GA6187)	GD8237	30	10,000 to 16,000 seeds/lb. (22,000 to 35,200 seeds/kg)	Talc
	High-Rate Small Milo/Grain Sorghum	Red (GA5795)	GD8237	60	12,000 to 18,000 seeds/lb. (26,400 to 39,600 seeds/kg)	Talc
	High-Rate Large Milo/Grain Sorghum	Yellow (GA6633)	GD8237	60	10,000 to 14,000 seeds/lb. (22,000 to 30,800 seeds/kg)	Talc
	Cotton, Acid-Delinted	White (GA5796)	GD11122	30	4200 to 5200 seeds/lb. (9,240 to 11,440 seeds/kg)	Talc
	Large Cotton, Acid Delinted	Tan (GA6168)	GD11122	36	3800 to 4400 seeds/lb. (8,360 to 9,680 seeds/kg)	Talc
	High-Rate Cotton, Acid-Delinted	Light Green (GA6478)	GD11122	48	4200 to 5200 seeds/lb. (9,240 to 11,440 seeds/kg)	Talc
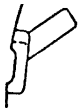	Hill-Drop Cotton, Acid-Delinted	Brown (GA6182)	GD11122	12 (3 to 6 seeds/ cell)	4000 to 5200 seeds/lb. (8,800 to 11,400 seeds/kg)	Talc
	Small Hill-Drop Cotton, Acid-Delinted	Dark Green (GA7255)	GD11122	12 (3 to 6 seeds/ cell)	5000 to 6200 seeds/lb. (11,000 to 13,640 seeds/kg)	Talc

***For More information on application rate see Additives section.**

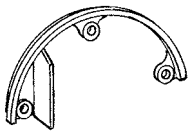

Use GD11122 upper brush retainer when using cotton and soybean discs.

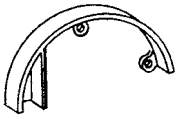

Use GD8237 upper brush retainer when using milo/grain sorghum discs.

BRUSH-TYPE SEED METER 2.0

	Crop	Disc Color-Code (Disc Part No.)	Upper Brush Retainer	Cells	Seed Size Range	*Lubricant
	Soybean	Black (GB1123)	GB1084	60	2200 to 4000 seeds/lb.	**Graphite** Talc
	Soybean	Dark Gray (GB1171)	GB1084	54	2000 to 3000 seeds/lb.	**Graphite** Talc
	Specialty Soybean	Dark Blue (GB1124)	GB1084	48	1400 to 2200 seeds/lb.	**Graphite** Talc
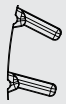	Small Milo/Grain Sorghum	Orange (GB1130)	GB1107	30	14,000 to 20,000 seeds/lb.	Talc
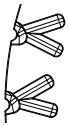	Large Milo Grain Sorghum	Light Blue (GB1131)	GB1107	30	10,000 to 16,000 seeds/lb.	Talc
	High-Rate Small Milo/Grain Sorghum	Red (GB1132)	GB1107	60	12,000 to 18,000 seeds/lb.	Talc
	High-Rate Large Milo/Grain Sorghum	Yellow (GB1133)	GD8237	60	10,000 to 14,000 seeds/lb.	Talc
	Wheat	Purple (GB1134)	GB1084	54	N/A Volumetric	**Graphite** Talc

***For More information on application rate see Additives section.**

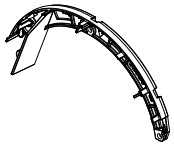

Use GB1084 upper brush retainer when using wheat and soybean discs.

Use GB1107 milo insert when using milo/ grain sorghum discs.

Turn seed disc counterclockwise when installing on meter hub while tightening two wing nuts that retain disc. Seed disc should have slight resistance when rotated counterclockwise after wing nuts are tight.

Brush-type seed meter attaches to seed hopper same as finger pickup seed meter. Secure to bottom of seed hopper with two 5⁄16" thumbscrews. Tighten thumbscrews slightly with pliers. DO NOT OVER TIGHTEN.

Misalignment between drive coupler and seed meter input shaft may cause erratic seed spacing from momentary stoppage of seed disc. Check alignment and adjust as needed.

Refer to planting rate charts in this manual for recommended seed drive transmission sprocket combinations.

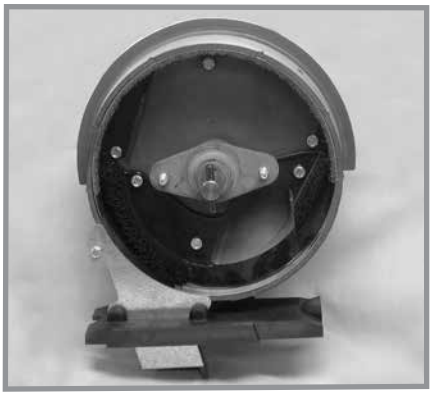

Shown without seed disc installed

NOTICE

Replace hopper lids after hoppers are filled to prevent accumulation of dust or dirt in seed meter which will cause premature wear.

NOTE: Clean seed is required to ensure accurate seed metering from brush-type seed meters. Remove seed discs daily and check seed meter or brushes for buildup of foreign material, such as hulls, stems, etc.

FINGER PICKUP SEED METER

Crop	Fingers	*Lubricant
Corn	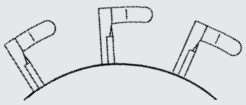 Part No.: GR1848 - Finger Assembly, Corn	**Graphite** Talc
No. 1 and/or No. 2 size Confectionery Sunflower Seeds	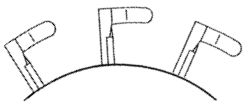 Part No.: GR1848 - Finger Assembly, Corn	Talc
No. 3 and/or No. 4 size Oil Sunflower Seeds	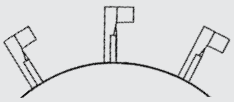 Part No.: GR2154 - Finger Assembly, Oil	Talc
Blank fingers replace alternate fingers to reduce planting rate by half while allowing the finger wheel to maintain a minimum of 40 RPM when planting low rates.	 Part No.: GD11787 - Half Rate Blank Finger	**Graphite** Talc
***For More information on application rate see Additives section.**		
NOTE: Always field check seed population to verify planting rates.		
NOTE: Refer to planting rate charts in this manual for recommended seed drive transmission sprocket combinations.		

VACUUM SETTINGS

	Crop	**Seed Disc Kit	Seed Disc Part No.	Ejector Wheel (Color)	Cells	Seed Size Range	Singulator Zone Setting	Vacuum Setting Inches of Water (kPa)	Lubricant
	Corn ‡ Large Sweet Corn	G9040X	B0678 (Light Blue)	1 row 5 punches (Light Blue)	40	35-70 lbs/80k (2500-5000 seeds/kg)	2	18-20 (4.5-5.0)	**Graphite*** **Talc*** Bayer Fluency† (if mandated)
	Soybean	G9041X	B0848 (Black)	2 rows 6 punches (Black)	120	2200-4000 seeds/lb (4850-8820 seeds/kg)	0	10-14 (2.5-3.5)	**Graphite*** **Talc*** Bayer Fluency† (if mandated)
	Soybean	---	GB1174 (Black)	1 row 6 punches (Green)	60	2200-4000 seeds/lb (4850-8820 seeds/kg)	0	10-14 (2.5-3.5)	**Graphite*** **Talc*** Bayer Fluency† (if mandated)
	Sugar Beet	G9043X	B0683 (Dark Orange)	1 row 6 punches (Dark Orange)	60	Pelletized	2	15 (3.75)	**Graphite*** Bayer Fluency† (if mandated)
	Milo	G9043X	B0683 (Dark Orange)	1 row 6 punches (Dark Orange)	60	10,000-20,000 seeds/lb (22000-44000 seeds/kg)	2	15 (3.75)	**Graphite*** **Talc*** Bayer Fluency† (if mandated)
	Sunflower ‡ Small Sweet Corn	G9042X	B0684 (Gray)	1 row 5 punches (Gray)	40	Oil seeds #2, 3, 4	2	12-18 (3.0-4.5)	**Graphite*** **Talc*** Bayer Fluency† (if mandated)
	Sunflower	G9042X	B0684 (Gray)	1 row 5 punches (Gray)	40	Oil seeds #5	2	5-8 (1.25-2.0)	**Graphite*** **Talc*** Bayer Fluency† (if mandated)
	Specialty Disc 1	G9272X	B0912 (Green)	1 row 6 punches (Green)	60	Cotton	2	15-20 (3.75-5.0)	**Graphite*** **Talc as needed*** Bayer Fluency† (if mandated)

Continued on next page.

VACUUM SETTINGS

Crop		**Seed Disc Kit	Seed Disc Part No.	Ejector Wheel (Color)	Cells	Seed Size Range	Singulator Zone Setting	Vacuum Setting Inches of Water (kPa)	Lubricant
	Specialty Disc 2	G9273X	B0914 (Brown)	1 row 6 punches (Green)	60	Black turtle & navy edible beans	2	15-20 (3.75-5.0)	**Graphite* Talc as needed*** Bayer Fluency† (if mandated)
	Specialty Disc 3	G9308X	B0913 (Dark Blue)	1 row 6 punches (Green)	60	Pinto & Great Northern edible beans & low-rate soybean	2	15-20 (3.75-5.0)	**Graphite* Talc as needed*** Bayer Fluency† (if mandated)
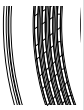	Wheat Disc	G10050X	GB1170 (Purple)	Brush Type	54	N/A Volumetric	0	6-16 (15-41)	**Graphite* Talc as needed*** Bayer Fluency† (if mandated)

Install selected seed disc. Position vacuum cover on meter by aligning keyhole slots over bolt heads. Push cover on meter and turn counter clockwise to lock in place.

***For More information on application rate, see Additives section.**
****Includes seed disc, ejector wheel, and spring.**

†Bayer Fluency Agent is only required to be used in place of graphite or talc lubricants on vacuum equipped planters that are sowing neonicotinoid treated seeds in Canada. Refer to the Bayer Fluency Agent section for more information.
‡Conventional hoppers only, not applicable with bulk fill.

NOTE: See "Field Check Seed Population" on page 2-42 **for more information. Always field check seed population to ensure planting rates are correct.**

NOTE: Singulator settings are marked from 0 - 3.

NOTE: Mixing seed sizes and shapes affects meter performance. Use consistent seed size and shape.

NOTE: Use 1 tablespoon powdered graphite with each standard hopper fill of seed. Seed treatment, foreign material, dirt or seed chaff may cause gradual reduction of seed disc fill (population). See "Additives" pages for more information.

NOTE: Excessive seed treatment, humidity, and light-weight seed can affect meter performance. Use ½ cup (118 ml) of talc with each standard hopper fill of seed and mix thoroughly to coat all seeds and adjust rates as needed. Use of talc aids seed flow into meter, singulation, and disc seed drop.

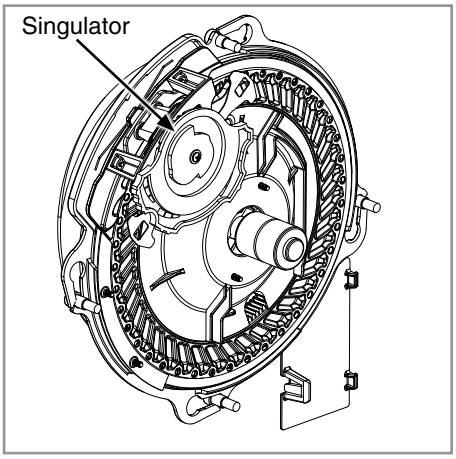

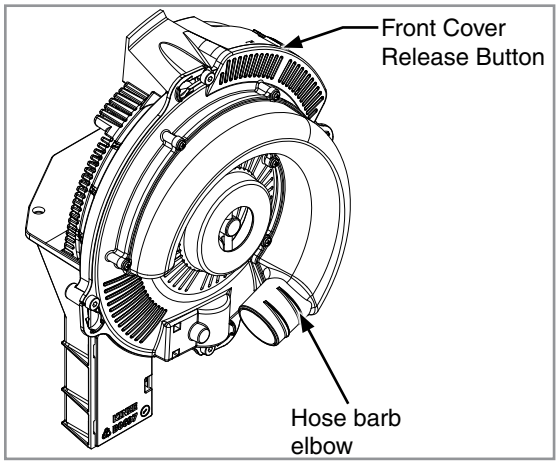

NOTE: Foreign material in seed disc orifices, such as seed chips, hulls, stems, etc., may affect seed delivery. Clean seed ensures accurate seed metering from vacuum seed meter. Remove Seed discs daily to check for buildup of foreign material in seed disc orifices.

Air inlet screens allow air to enter system and aids in keeping field residue or other foreign material out of meter.

See "Vacuum Seed Meter Maintenance" on page 5-18 and "Preparation for Storage" on page 5-37 in Lubrication and Maintenance section for more information.

NOTE: Damaged seed or seed containing foreign material will cause plugging of seed disc orifices and require more frequent seed meter cleanout to prevent underplanting.

Wheel-Type Ejectors

Wheel-type ejectors expel seed remants from seed disc orifices. These ejectors are disc specific and colored coded to match disc.

NOTICE	**Replace hopper lids after hoppers are filled to prevent accumulation of dust or dirt in seed meter which will cause premature wear.**

NOTE: Seed size, seed shape, seed treatments, travel speed, and planting rate affect meter performance.

1. Select seed disc and ejector to match crop and population.

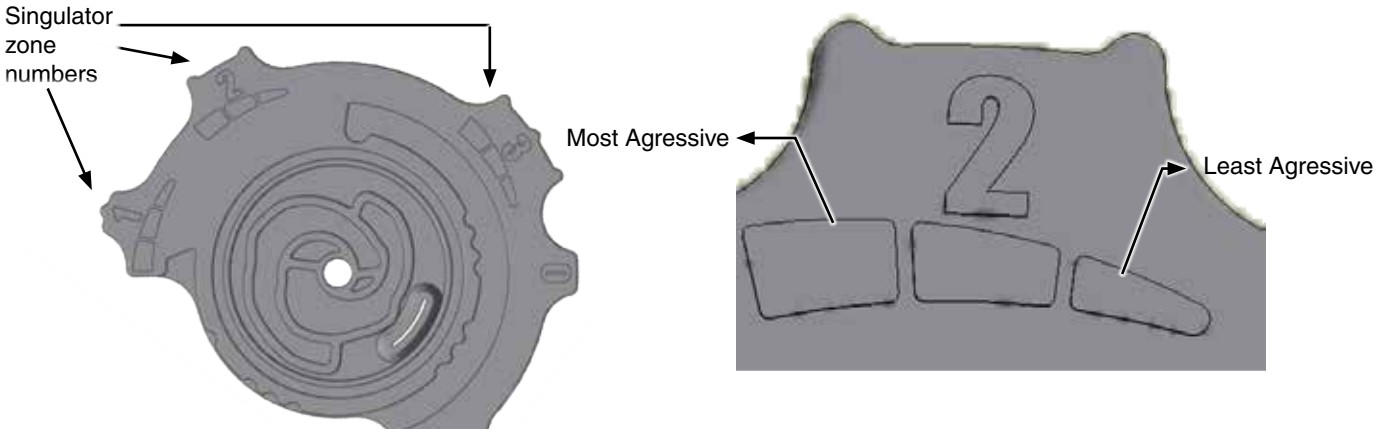

Singulator Adjustment Wheel

2. Adjust singulator wheel to initial setting. Seed size, seed shape, seed treatments, travel speed and planting rate all affect meter performance.

3. With vacuum fan running, lower planter to planting position and drive forward a short distance to load seed into seed disc cells.

4. Adjust vacuum level to initial setting according to tables on page.

NOTE: Vacuum reading will be much lower when seed disc cells are empty. Load all seed cells before setting vacuum level.

NOTE: Operate vacuum fan 3-5 minutes to bring oil up to normal operating temperature prior to making final vacuum level adjustment.

4. Adjust vacuum level to initial setting according to tables on page.

NOTE: Vacuum reading will be much lower when seed disc cells are empty. Load all seed cells before setting vacuum level.

NOTE: Operate vacuum fan 3-5 minutes to bring oil up to normal operating temperature prior to making final vacuum level adjustment.

SEED METER CLEANOUT

NOTE: Use of damaged seed or seed containing foreign material will cause plugging of seed cell orifices and require more frequent seed meter cleanout to prevent underplanting.

Thorough seed meter cleanout is important to maintain genetic purity.

1. Disengage seed drive and remove seed hopper and meter.
2. Dump seed from right rear corner of hopper into a container.
3. Lay hopper on its right side. Push release button and rotate seed meter vacuum cover clockwise to align keyhole slots with bolt heads. Lift off cover.
4. Rotate seed disc hub clockwise to unlock and remove seed disc.
5. Empty meter.
6. Thoroughly inspect meter to ensure all seed is removed.
7. Replace seed disc. Install vacuum cover.

ADDITIVES

Lubricant Application Rate	
Graphite	
Conventional Hoppers	1 Tbs./Hopper Fill
Bulk Fill Hoppers	1 Pound Bottle/50 Unit Fill
80/20 Talc-Graphite	
Conventional Hoppers	½ C.**
Bulk Fill Hoppers	8 Pounds/50 Unit Fill**
**Must be evenly mixed during fill.	
Talc	
Conventional Hoppers	¼ C.*
Bulk Fill Hoppers	4 Pounds/50 Unit Fill*
*Double amount of talc for sunflowers.	

GRAPHITE

The use of graphite is the primary recommendation to promote seed flow, provide lubrication for the seed meter and to help dissipate static charge buildup. Among the available dry seed lubricants graphite is the most effective and easiest to use and it requires no mechanical agitation

Conventional Hoppers
Mix one tablespoon of **powdered graphite** with seed each time hoppers are filled. Regular graphite use prolongs life of the seed meter components, improves seed spacing, and may reduce buildup of seed treatments.

NOTE: DO NOT apply graphite only in center of hopper. It will filter too quickly through the seed and not distribute as evenly as desired.

Apply graphite around outer perimeter of hopper.

Bulk Fill Hoppers
Mix 1 pound bottle of powdered graphite each time the bulk seed hopper is filled. Graphite should be added in layers as the bulk seed hoppers are filled. Regular graphite use prolongs life of the seed meter components, improves seed spacing, and may reduce buildup of seed treatments.


Adding graphite to conventional hopper


Adding graphite bulk fill hopper

NOTE: Additional graphite may be required to retard buildup of seed treatments on meter components. More frequent cleaning of monitor seed tubes may be necessary due to use of additional graphite.

80/20 TALC-GRAPHITE
Talc-Graphite lubricant is to be used for treated seed, providing benefits of both talc and graphite. It absorbs mositure to prevent bridging, minmizes static electricity for improved seed flow, and lubricates seed and meters.

Conventional Hoppers
Mix ½ C. of 80/20 talc-graphite evenly with seed each time hoppers are filled. Regular graphite use prolongs life of the seed meter components, improves seed spacing, and may reduce buildup of seed treatments.

NOTE: Talc-Graphite lubricant MUST be mixed evenly during fill.

Bulk Fill Hoppers
Mix 8 lbs. of 80/20 talc-graphite each time the bulk seed hopper is filled. Regular graphite use prolongs life of the seed meter components, improves seed spacing, and may reduce buildup of seed treatments.

NOTE: Talc-Graphite lubricant MUST be mixed evenly during fill.

TALC

Talc seed lubricant may be used as a drying agent in addition to graphite lubrication. The drying agent may improve seed release and/or **to retard buildup of seed treatments on meter components.**

1. Fill hopper ½ full of seed, add ¼ cup (conventional); 2 pounds (Bulk Fill) of talc and **mix thoroughly**.

2. Finish filling hopper, add another ¼ cup (conventional); 2 pounds (Bulk Fill) of talc and **mix thoroughly**.

3. Adjust rate of talc use as needed so all seeds are coated, while avoiding a buildup of talc in bottom of hopper.

Humid conditions and/or small sized seeds with extra seed treatment may require additional talc to maintain meter performance.

NOTE: Liquid seed treatments or innoculants may create buildup on the seed disc or brushes. Check frequently for proper population and/or seed delivery when using any liquid seed treatment.

Completely mix all treatments with seed following manufacturers' recommendations. Seed treatment dumped on top of seed after hopper is filled may not mix properly and cause seed bridging, reducing population or stopping meter from planting.

BAYER FLUENCY AGENT

Bayer Fluency Agent is an alternate seed lubricant by Bayer Crop Science. The intent of this product is to replace graphite and talc lubricants and to lower the amount of dust emissions from planter vacuum fans.

This product, as tested by Kinze, is compatible with Kinze's bulk fill system and vacuum meters. Due to limited testing, wear life characteristics of meters and bulk fill systems that use Bayer Fluency Agent are not yet known. Please follow Bayer Fluency Agent instructions for rates and mixing directions.

NOTE: Presently, Bayer Fluency Agent is only required to be used in Canada with Bulk Fill or Vacuum planters that plant corn or beans treated with neonicotinoids. Farms outside of Canada, farms not using seed treated with neonicotinoids, and farms not using pneutmatic metering devices do not need to use Bayer Fluency Agent. All planters not equipped with vacuums or fans are exempt from using Bayer Fluency Agent.

FRAME MOUNTED COULTER (PULL ROW)

Frame mounted coulters with 1" bubbled, 1" fluted (8 flutes) or ¾" fluted (13 flutes) blades are used on pull row units only.

Springs provide down pressure on coulter for maximum penetration while exerting less shock load on row unit.

Initial coulter blade location is in top hole. Relocate blade to one of lower two holes (1" increments) as wear occurs or for deeper blade operation.

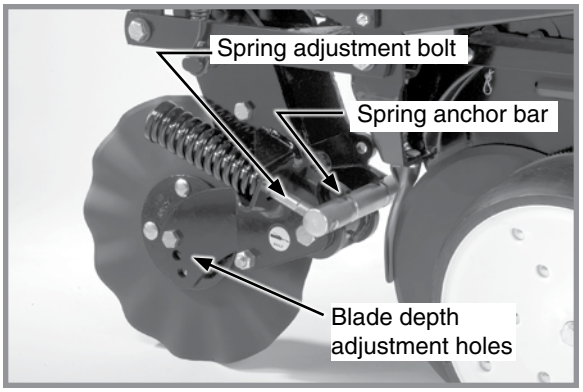

Frame mounted coulter adjustment

DOWN PRESSURE ADJUSTMENT

NOTICE

Excessive down pressure can damage coulter components when coulter strikes an obstacle. Do not set down pressure higher than needed for consistent soil penetration.

Raise planter. Turn spring adjustment bolts clockwise to increase or counterclockwise to decrease down pressure. Set both springs to specification shown in following table:

Frame Mounted Coulter Spring Downpressure Settings		
End flush with spring anchor bar	Extended ½" (1 cm) through spring anchor bar	All threads used
275 lb (124.7 kg)	400 lb (181.4 kg)	500 lb (226.8 kg)

RESIDUE WHEELS (FRAME MOUNTED COULTER)

NOTICE

Tined wheel forward mounting positions cannot be used on four rows behind axle due to inadequate clearance.

Residue wheels attach to frame mounted coulter with two cap screws and sleeves allowing the unit to free-float. A 2-position spindle bolt mounting positions wheels interlocked or staggered. Depth adjustment is made with a spring-loaded cam and pin with 11 positions in ¼" increments. A high point on the cam allows wheels to be locked up.

A weed guard on the inboard side of each wheel helps prevent weed wrap which can cause premature bearing failure.

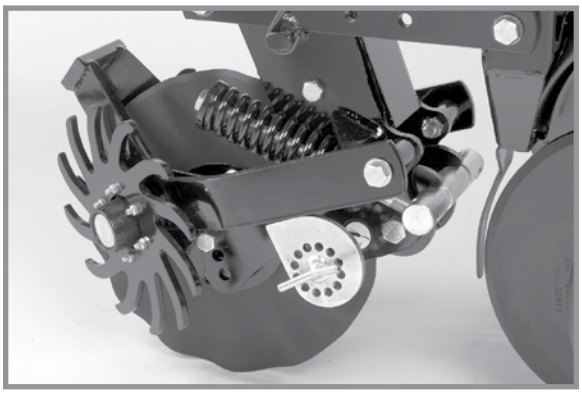

Frame mounted coulter residue wheel

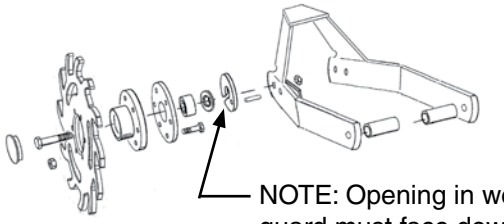

ROW UNIT MOUNTED DISC FURROWER (PULL ROW)

Disc furrowers are used to clear crop residue, dirt clods, and dry soil from in front of row units for a clean and smooth seed bed. The disc furrower may be equipped with 12" solid blades or 12" notched blades. Notched blades are for heavier residue conditions and cut crop residue and move it aside to prevent plugging or pushing.

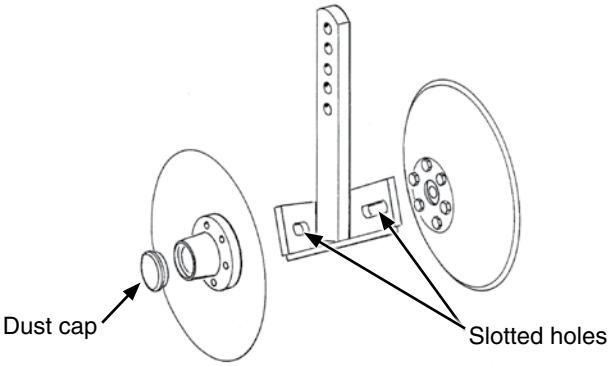

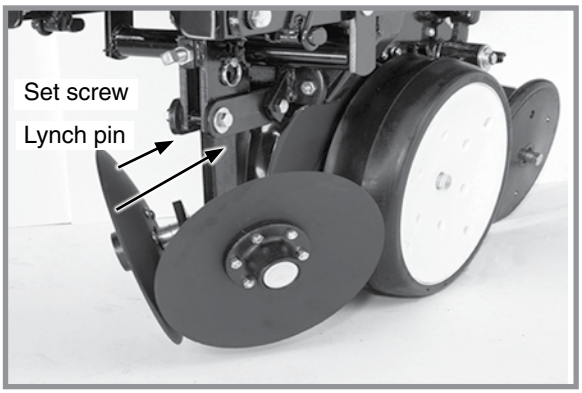

Disc furrower adjustment

Vertical adjustment can be made in ⅓" (0.8 cm) increments. Remove lynch pin in vertical support arm and move arm up or down. Reinstall lynch pin. Finer adjustment can be made by removing lynch pin and using ⅝" x 2¼" set screw to clamp support arm in position. Slotted holes in support arm allow front to rear disc blade adjustment. Blades can be adjusted so front edges meet or cutting edge of one blade overlaps edge of other blade.

NOTE: Dust cap must be removed to make adjustments.

ROW UNIT MOUNTED RESIDUE WHEEL

Row unit mounted residue wheels are used on pull and push row units.

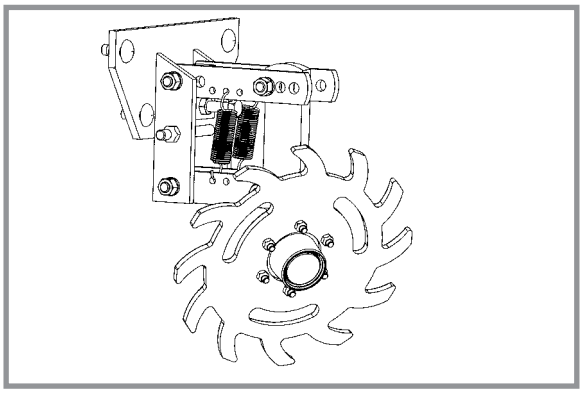

Row Unit Mounted Residue Wheel

Two adjustable springs on each residue wheel parallel links provide down force adjustment. Position 1 provides minimum down pressure and position 3 maximum down pressure.

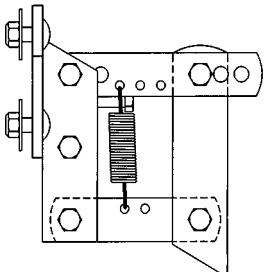

Position 1 *(Least)*

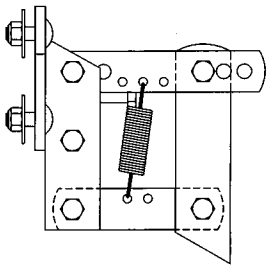

Position 2

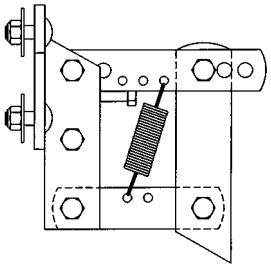

Position 3 *(Most)*

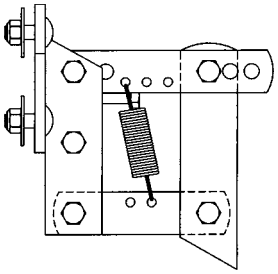

Additional uplift or float

Raise row unit and reposition springs to adjust down pressure.

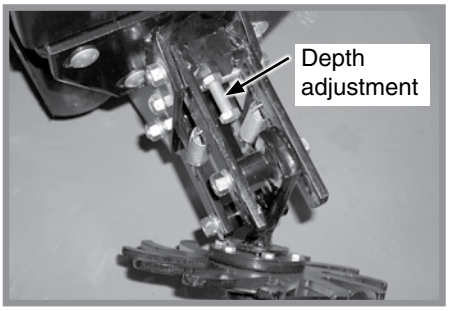

Wheel depth adjustment

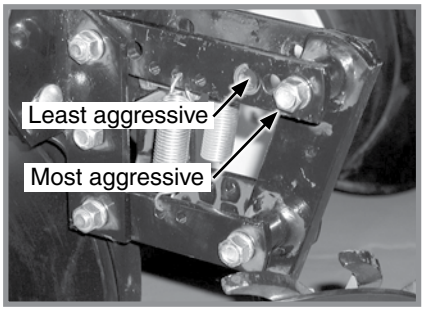

Wheel angle adjustment

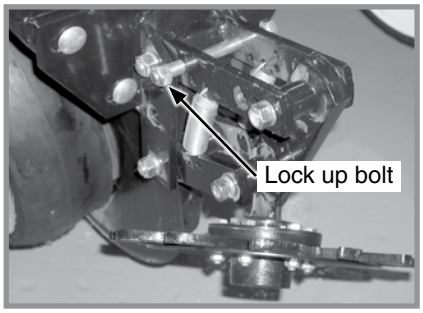

Wheel lock up

A full threaded bolt and jam nut located on the upper link sets maximum depth for loose soil conditions. Initial setting is 1¾" (4.4 cm) above row unit double disc opener depth.

Three holes in upper link adjust wheel angle. With wheel mount in most vertical position, using the rear hole in the upper link, the residue wheel is most aggressive. Moving wheel mount to a forward hole reduces aggressiveness of residue wheel for use in mulch till applications where soil is loose.

To lock residue wheel up, remove ½" x 5" lockup bolt, raise residue wheel and install bolt.

SPIKED CLOSING WHEEL

Spiked closing wheels crumble the sidewall, allowing roots to pentrate soil. They can be used on pull row units and push row units.

Align spiked closing wheels straight across from each other, in most rearward holes on closing wheel arm. Set the wheels 1" - 1¼" (2.5 - 3.1 cm) apart at the closest point. If large amounts of contouring is being done, mount wheels in the forward most hole. This will reduce drifting of row unit.

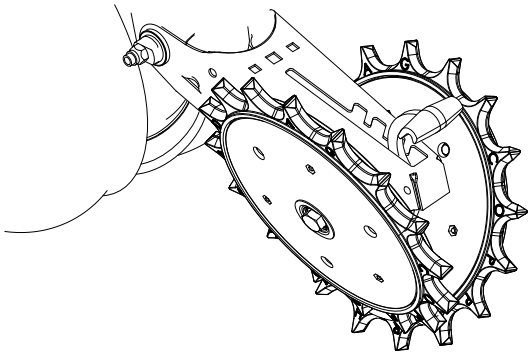

Row Unit Spiked Closing Wheel

ROW UNIT MOUNTED NO TILL COULTER

Row unit mounted no till coulters with 1" bubbled, 1" fluted (8 flutes) or ¾" fluted (13 flutes) blades may be used on pull row units and push row units (¾" fluted shown). Four quick adjustable down force springs are required per row when using row unit mounted no till coulters. See “Quick Adjustable Down Force Springs Options”.

Align coulter blade to row unit double disc openers. Adjust by loosening four attaching bolts, moving coulter arm, and tightening four attaching bolts. Coulter blade can be adjusted to one of four ½" (13 mm) incremental settings in the forked arm. Initial location is the top hole.

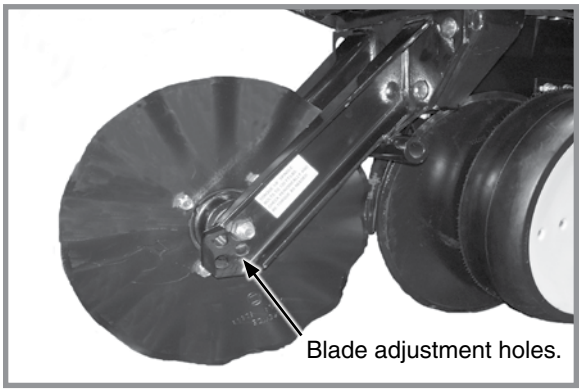

Row Unit Mounted No Till Coulter

Move blade as it wears to one of the three lower hole to maintain coulter blade at or slightly above opener discs as needed. Adjust coulter below depth of double disc opener blades in very hard soil conditions such as compacted wheel tracks to improve opener penetration and cutting of surface residue.

Check operating depth by setting planter down on a level concrete floor and checking relationship between coulter blade and row unit opener blade. Make sure planter is level and coulter is square with planter frame and aligned with row unit disc opener.

NOTE: Torque ⅝" spindle hardware to 120 ft-lb (162.7 N-m).

COULTER MOUNTED RESIDUE WHEELS

Coulter mounted residue wheels are designed for use on pull row units and push row units. Row unit extension brackets are required on the four center pull row units if the planter is equipped with coulter mounted residue wheels.

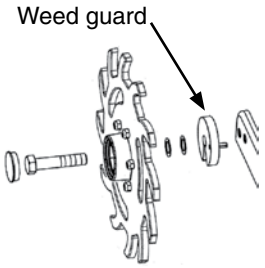

NOTE: Opening in weed guard must face down.

Coulter mounted residue wheels

Residue wheels attach to row unit mounted coulter with two cap screws and sleeves allowing unit to free-float. A 2-position spindle bolt mounting positions wheels interlocked or staggered. Depth adjustment is made with a spring-loaded cam and pin with 11 positions in ¼" (6 mm) increments. A high point on the cam allows wheels to be locked up.

A weed guard on the inboard side of each wheel helps prevent weed wrap which can cause premature bearing failure.

GRANULAR CHEMICAL HOPPER AND DRIVE

WARNING

Agricultural chemicals can cause death or serious injury to persons, animals, and plants or seriously damage soil, equipment, or property. Read and follow all chemical and equipment manufacturers labels and instructions.

NOTICE

Do not store granular products in granular chemical hoppers. High humidity or rain may cause stored granular products to bind and block the product from flowing.

The granular chemical hopper has a 1.4 cubic feet capacity.

Make sure no foreign objects get into hopper when it is being filled. Replace hopper lids after filling to prevent accumulation of dirt and moisture.

A metering gate on bottom of hopper regulates the application rate. See “Dry Insecticide and Dry Herbicide Application Rate Charts” in this manual. Calibrate using chemical manufacturers’ instructions.

Granular chemical hopper

Granular chemical clutch drive coupler and meter shaft can be disengaged and engaged by turning throwout knob at rear of hopper support panel.

Rotate knob ¼ turn counterclockwise to disengage and ¼ turn clockwise to engage.

Slotted holes in hopper support panel and clutch housing allow for alignment adjustment between clutch drive coupler and meter shaft.

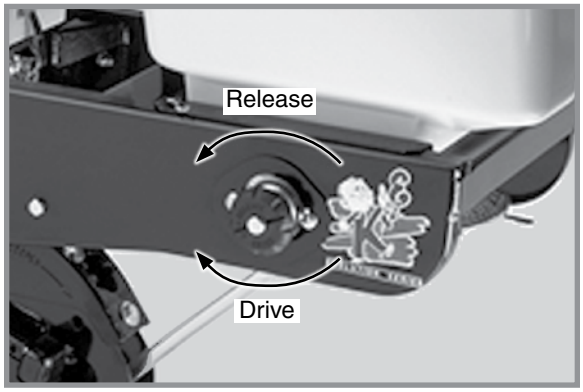

Granular chemical drive release

SPRING TOOTH INCORPORATOR

Spring tooth incorporator smooths soil behind row unit and incorporates granular chemicals.

Adjust two mounting chains on each spring tooth incorporator so there is approximately ⅛" (0.3 cm) slack in chain when unit is lowered to planting position.

NOTE: Spring tooth incorporator is not compatible with covering discs/single press wheel option.

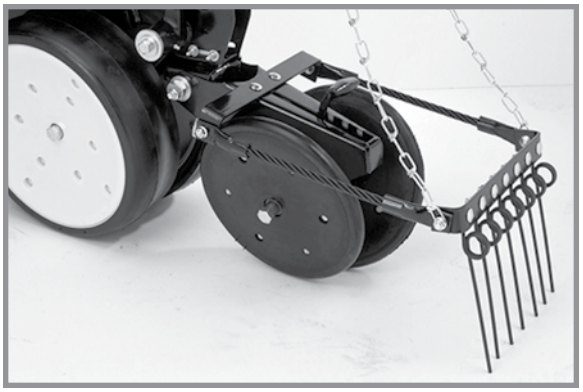

Spring tooth incorporator

GRANULAR CHEMICAL BANDING OPTIONS

Granular chemical banding options allow 4½" slope-compensating banding, straight drop in-furrow placement or 14" rear banding.

NOTE: Granular chemical rear bander is not compatible with covering discs/single press wheel option.

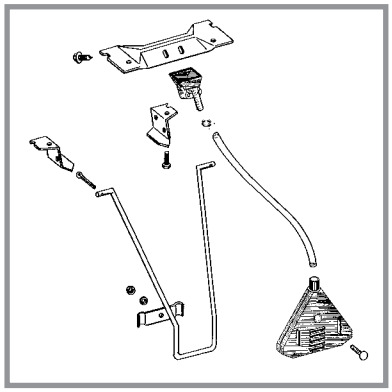

14" rear banding

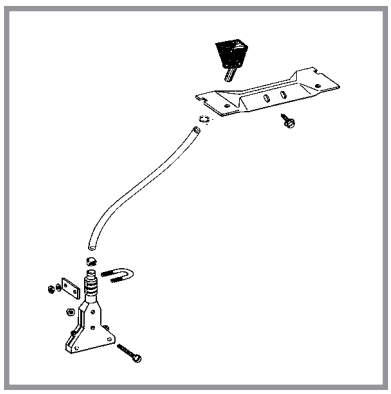

4½" slope-compensating bander

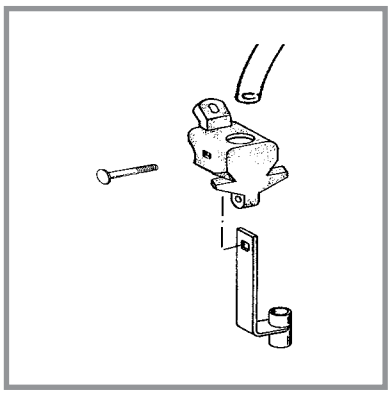

Straight drop in-furrow placement

GRANULAR CHEMICAL BANDER SHIELD

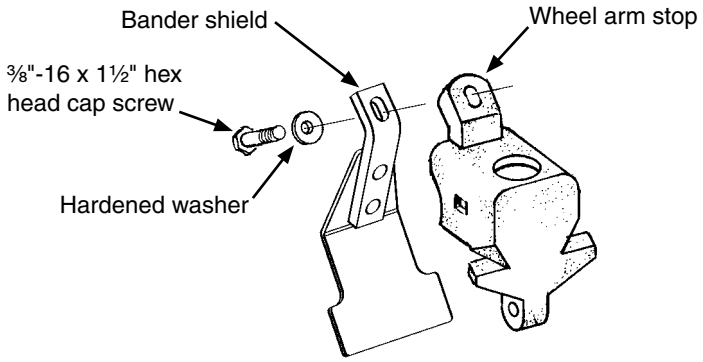

Optional granular chemical bander shield is installed on underside of wheel arm stop to shield crop residue from lodging in granular chemical bander.

GENERAL PLANTING RATE INFORMATION

NOTICE

Sprocket combinations in these charts are for average conditions. Changes in sprocket combinations may be required for desired planting population. ALWAYS MAKE FIELD CHECKS TO BE SURE YOU ARE PLANTING AT THE DESIRED RATE.

NOTICE

Seed additives added in the hopper may affect finger pickup seed meter performance and accelerate wear.

NOTE: Seed size and shape may affect planting rate.

NOTE: Not all row spacings listed apply to all size planters.

NOTE: Speeds above 6.0 MPH (10 KPH) can adversely affect seed spacing.

MECHANICAL

Finger Pickup Corn Meter
Larger grades generally plant more accurately at the high end of the ground speed range than smaller grades. Higher than optimum speeds may result in population rate increase or higher incidence of doubles, particularly with small seed. Medium round corn seed is most desirable for planting accuracy at optimum speed.

Finger Pickup Oil Sunflower Meter
Larger grades generally plant more accurately at the high end of the ground speed range than smaller grades. Higher than optimum speeds may result in population rate increase or higher incidence of doubles, particularly with small seed. No. 3 and/or No. 4 size oil sunflower seeds are recommended for use in finger pickup seed meters equipped with oil sunflower fingers. No. 1 and/or No. 2 size confectionery sunflower seeds are recommended for use in finger pickup seed meters equipped with corn fingers.

Brush-Type Seed Meter (Soybean, Milo/Grain Sorghum, Acid-Delinted Cotton)
Rate charts are given in seeds per acre as well as seed spacing in inches rounded to nearest tenth of an inch. Because of large range in seed size, pounds per acre is not a suggested method of selecting transmission settings. Smaller size seed pounds per acre may be below what was expected and large seed pounds per acre may appear above expectations. To determine pounds per acre, use formula given in “Determining Pounds Per Acre (Brush-Type Seed Meter)” in “Check Seed Population” in Machine Operation section of this manual.

NOTE: Planting speed can affect actual seeding rate. Make a field check and adjust transmission setting to obtain desired seed drop.

NOTE: Seed population per acre with 15" rows double rate for 30" rows, as well as 18" rows versus 36" rows and 19" rows versus 38" rows, at listed sprocket combination. See following pages.

NOTE: Half Rate (2 to 1) Drive Reduction Package may be required to obtain desired population and seed spacing when planting 15" row soybeans or other crops. Half Rate Drive with brush-type seed meters reduces planter transmission speed. Seeding rate will be approximately 50% of chart reading when using Half Rate (2 To 1) Drive Reduction Package.

EXAMPLE: 30" row spacing using 60 cell seed discs in brush-type seed meters.
80,928 ÷ 2 = 40,464 Population (2.6" Seed Spacing x 2 = 5.2" Seed Spacing)

VACUUM

NOTE: Contact wheel drive sprocket references are located in each chart title.

NOTE: 22, 28 and 44 tooth drive sprockets are NOT applicable to all rate charts. Check chart titles to ensure proper rate chart is selected. 22 tooth sprockets require use of 148 pitch No. 40 chains, 28 tooth sprockets require use of 150 pitch No. 40 chains and 44 tooth sprockets require use of 158 pitch No. 40 chains.

NOTE: When using 54 cell sunflower disc, use 15 tooth drive sprocket at contact wheels and replace 28 tooth drive sprocket at wheel module reverser plates with 19 tooth sprocket. 15 tooth sprockets require use of 144 pitch No. 40 chains. Applicable sprockets, chains, and instructions supplied in G1K469 Sunflower Rate Reduction Kit.

NOTE: 30 tooth sprockets are not standard with the model 3700 planter. See your authorized Kinze dealer.

PLANTING RATES FOR FINGER PICKUP SEED METERS (STANDARD DRIVE)
APPROXIMATE SEEDS/ACRE FOR VARIOUS ROW WIDTHS

20" Rows	22" Rows	30" Rows	Transmission Sprockets Drive	Transmission Sprockets Driven	Recommended Speed Range (MPH)	Average Seed Spacing In Inches
24,279	22,013	16,186	17	28	4 to 6	12.9
25,178	22,828	16,785	17	27	4 to 6	12.5
26,147	23,706	17,431	17	26	4 to 6	12.0
27,135	24,602	18,090	19	28	4 to 6	11.6
27,192	24,654	18,128	17	25	4 to 6	11.5
28,140	25,514	18,760	19	27	4 to 6	11.1
28,325	25,681	18,883	17	24	4 to 6	11.1
29,222	26,494	19,481	19	26	4 to 6	10.7
29,556	26,797	19,704	17	23	4 to 6	10.6
30,392	27,555	20,261	19	25	4 to 6	10.3
31,656	28,701	21,104	19	24	4 to 6	9.9
32,847	29,781	21,898	23	28	4 to 6	9.5
33,033	29,950	22,022	19	23	4 to 6	9.5
34,064	30,884	22,709	23	27	4 to 6	9.2
34,275	31,076	22,850	24	28	4 to 6	9.2
35,375	32,073	23,583	23	26	4 to 6	8.9
35,546	32,228	23,697	24	27	4 to 6	8.8
35,703	32,371	23,802	25	28	4 to 6	8.8
35,780	32,440	23,853	17	19	4 to 6	8.8
36,789	33,355	24,526	23	25	4 to 6	8.5
36,912	33,467	24,608	24	26	4 to 6	8.5
37,026	33,570	24,684	25	27	4 to 6	8.5
37,133	33,667	24,755	26	28	4 to 6	8.4
38,322	34,745	25,548	23	24	4 to 6	8.2
38,388	34,805	25,592	24	25	4 to 6	8.2
38,450	34,861	25,633	25	26	4 to 6	8.2
38,507	34,913	25,671	26	27	4 to 6	8.1
38,561	34,962	25,707	27	28	4 to 6	8.1
39,989	36,256	26,659	23	23	4 to 6	7.8
41,469	37,599	27,646	28	27	4 to 6	7.6
41,526	37,650	27,684	27	26	4 to 6	7.6
41,655	37,767	27,770	25	24	4 to 6	7.5
41,727	37,832	27,818	24	23	4 to 6	7.5
43,064	39,044	28,709	28	26	4 to 6	7.3
43,187	39,156	28,791	27	25	4 to 6	7.3
43,466	39,409	28,977	25	23	4 to 6	7.2
44,693	40,521	29,795	19	17	4 to 6	7.0
44,787	40,607	29,858	28	25	4 to 6	7.0
44,987	40,788	29,991	27	24	4 to 6	7.0
45,204	40,985	30,136	26	23	4 to 6	7.0
46,653	42,299	31,102	28	24	3 to 6	6.7
46,943	42,561	31,295	27	23	3 to 6	6.7
48,407	43,889	32,271	23	19	3 to 5.5	6.5
48,681	44,137	32,454	28	23	3 to 5.5	6.5
50,511	45,797	33,674	24	19	3 to 5.5	6.2
52,616	47,705	35,077	25	19	3 to 5	6.0
54,102	49,052	36,068	23	17	3 to 5	5.8
54,720	49,613	36,480	26	19	3 to 5	5.7
56,454	51,185	37,636	24	17	3 to 5	5.6
56,825	51,521	37,883	27	19	3 to 5	5.5
58,806	53,317	39,204	25	17	3 to 4.5	5.3
58,931	53,430	39,287	28	19	3 to 4.5	5.3
61,158	55,450	40,772	26	17	3 to 4.5	5.1
63,510	57,582	42,340	27	17	3 to 4.5	4.9
65,862	59,715	43,908	28	17	3 to 4.5	4.8

NOTE: See “General Planting Rate Information” and “Check Seed Population” pages for more information. Always field check seed population to verify planting rates.

PLANTING RATES FOR BRUSH-TYPE SEED METERS (STANDARD DRIVE)
APPROXIMATE SEEDS/ACRE FOR VARIOUS ROW WIDTHS

Transmission Sprockets		60 Cell Soybean Or High-Rate Milo/Grain Sorghum			Average Seed Spacing In Inches	48 Cell Specialty Soybean Or High-Rate Acid-Delinted Cotton			Average Seed Spacing In Inches	Speed Range (MPH)
Drive	Driven	20" Rows	22" Rows	30" Rows		20" Rows	22" Rows	30" Rows		
17	28	121,392	110,062	80,928	2.6	97,113	88,049	64,742	3.2	2 to 8
17	27	125,889	114,139	83,926	2.5	100,712	91,312	67,141	3.1	2 to 8
17	26	130,731	118,529	87,154	2.4	104,712	94,823	69,723	3.0	2 to 8
19	28	135,674	123,011	90,449	2.3	108,539	98,408	72,359	2.9	2 to 8
19	27	140,699	127,567	93,799	2.2	112,559	102,053	75,039	2.8	2 to 8
17	24	141,624	128,406	94,416	2.2	113,300	102,725	75,533	2.8	2 to 8
17	23	147,782	133,989	98,521	2.1	118,226	107,191	78,817	2.7	2 to 8
19	25	151,955	137,772	101,303	2.1	121,563	110,217	81,042	2.6	2 to 8
19	24	158,286	143,513	105,524	2.0	126,629	114,810	84,419	2.5	2 to 8
23	28	164,237	148,908	109,491	1.9	131,390	119,126	87,593	2.4	2 to 8
19	23	165,168	149,752	110,112	1.9	132,135	119,802	88,090	2.4	2 to 8
24	28	171,379	155,383	114,252	1.8	137,103	124,307	91,402	2.3	2 to 8
24	27	177,725	161,137	118,483	1.8	142,179	128,909	94,786	2.2	2 to 8
17	19	178,895	162,198	119,263	1.8	143,115	129,758	95,410	2.2	2 to 8
24	26	184,560	167,334	123,040	1.7	147,648	133,868	98,432	2.1	2 to 8
26	28	185,660	168,331	123,773	1.7	148,527	134,664	99,018	2.1	2 to 8
24	25	191,943	174,028	127,962	1.6	153,555	139,223	102,370	2.0	2 to 8
26	27	192,536	174,566	128,357	1.6	154,029	139,653	102,686	2.0	2 to 8
23	23	199,941	181,280	133,294	1.6	159,953	145,024	106,635	2.0	2 to 8
27	26	207,630	188,251	138,420	1.5	166,104	150,601	110,736	1.9	2 to 8
24	23	208,634	189,161	139,089	1.5	166,907	151,329	111,271	1.9	2 to 8
25	23	217,326	197,042	144,884	1.4	173,861	157,634	115,907	1.8	2 to 8
19	17	223,463	202,606	148,975	1.4	178,770	162,085	119,180	1.8	2 to 8
27	24	224,933	203,939	149,955	1.4	179,946	163,151	119,964	1.7	2 to 8
28	24	233,264	211,492	155,509	1.3	186,661	169,194	124,407	1.7	2 to 8
23	19	242,033	219,443	161,355	1.3	193,626	175,554	129,084	1.6	2 to 8
28	23	243,405	220,687	162,270	1.3	194,724	176,550	129,816	1.6	2 to 8
24	19	252,557	228,985	168,371	1.2	202,044	183,187	134,696	1.6	2 to 8
25	19	263,079	238,525	175,386	1.2	210,464	190,820	140,309	1.5	2 to 8
23	17	270,507	245,260	180,338	1.2	216,405	196,207	144,270	1.5	2 to 8
26	19	273,603	248,067	182,402	1.1	218,883	198,454	145,922	1.4	2 to 7
27	19	284,126	257,607	189,417	1.1	227,301	206,086	151,534	1.4	2 to 7
28	19	294,650	267,149	196,433	1.1	235,719	213,719	157,146	1.3	2 to 7
26	17	305,792	277,251	203,861	1.0	244,634	221,801	163,089	1.3	2 to 7
27	17	317,553	289,915	211,702	0.9	245,043	230,332	169,362	1.2	2 to 7
28	17	329,313	298,577	219,542	0.9	263,451	238,862	175,634	1.2	2 to 7

NOTE: See “General Planting Rate Information” and “Check Seed Population” pages for additional information.

NOTE: When using Half Rate (2 To 1) Drive Reduction Package, rates are approximately 50% of given numbers.

NOTE: Always field check seed population to ensure planting rates are correct.

PLANTING RATES FOR BRUSH-TYPE SEED METERS (STANDARD DRIVE) APPROXIMATE SEEDS/ACRE FOR VARIOUS ROW WIDTHS

Transmission Sprockets		36 Cell Acid-Delinted Large Cotton			Average Seed Spacing In Inches	30 Cell Milo/Grain Sorghum Or Acid-Delinted Cotton			Average Seed Spacing In Inches	Speed Range (MPH)
Drive	Driven	20" Rows	22" Rows	30" Rows		20" Rows	22" Rows	30" Rows		
17	28	72,836	66,038	48,557	4.3	60,696	55,031	40,464	5.2	2 to 8
17	27	75,534	68,484	50,356	4.2	62,945	57,070	41,963	5.0	2 to 8
17	26	78,438	71,117	52,292	4.0	65,366	59,265	43,577	4.8	2 to 8
19	28	81,404	73,806	54,269	3.9	67,838	61,506	45,225	4.6	2 to 8
19	27	84,419	76,539	56,279	3.7	70,350	63,784	46,900	4.5	2 to 8
17	24	84,975	77,044	56,650	3.7	70,812	64,203	47,208	4.4	2 to 8
17	23	88,670	80,394	59,113	3.5	73,892	66,995	49,261	4.2	2 to 8
19	25	91,173	82,664	60,782	3.4	75,978	68,887	50,652	4.1	2 to 8
19	24	94,971	86,107	63,314	3.3	79,143	71,756	52,762	4.0	2 to 8
23	28	98,543	89,345	65,695	3.2	82,119	74,455	54,746	3.8	2 to 8
19	23	99,101	89,851	66,067	3.2	82,584	74,876	55,056	3.8	2 to 8
24	28	102,827	93,229	68,551	3.0	85,689	77,691	57,126	3.7	2 to 8
24	27	106,635	96,682	71,090	2.9	88,863	80,569	59,242	3.5	2 to 8
17	19	107,337	97,319	71,558	2.9	89,447	81,098	59,631	3.5	2 to 8
24	26	110,736	100,401	73,824	2.8	92,280	83,667	61,520	3.4	2 to 8
26	28	111,396	100,999	74,264	2.8	92,829	84,165	61,886	3.4	2 to 8
24	25	115,158	104,410	76,772	2.7	95,972	87,014	63,981	3.3	2 to 8
26	27	115,521	104,739	77,014	2.7	96,267	87,282	64,178	3.3	2 to 8
23	23	119,964	108,767	79,976	2.6	99,971	90,640	66,647	3.1	2 to 8
27	26	124,578	112,951	83,052	2.5	103,815	94,126	69,210	3.0	2 to 8
24	23	125,180	113,496	83,453	2.5	104,316	94,580	69,544	3.0	2 to 8
25	23	130,395	118,225	86,930	2.4	108,663	98,521	72,442	2.9	2 to 8
19	17	134,078	121,564	89,385	2.3	111,732	101,304	74,488	2.8	2 to 8
27	24	134,960	122,363	89,973	2.3	112,467	101,970	74,978	2.8	2 to 8
28	24	139,958	126,895	93,305	2.2	116,633	105,747	77,755	2.7	2 to 8
23	19	145,220	131,666	96,813	2.2	121,017	109,722	80,678	2.6	2 to 8
28	23	146,043	132,412	97,362	2.1	121,703	110,344	81,135	2.6	2 to 8
24	19	151,535	137,391	101,023	2.1	126,278	114,492	84,185	2.5	2 to 8
25	19	157,848	143,116	105,232	2.0	131,540	119,262	87,693	2.4	2 to 8
23	17	162,350	147,197	108,233	1.9	135,254	122,630	90,169	2.3	2 to 8
26	19	164,162	148,840	109,441	1.9	136,802	124,033	91,201	2.3	2 to 7
27	19	170,475	154,564	113,650	1.8	142,064	128,804	94,709	2.2	2 to 7
28	19	176,790	160,290	117,860	1.8	147,324	133,574	98,216	2.1	2 to 7
26	17	183,476	166,351	122,317	1.7	152,895	138,625	101,930	2.1	2 to 7
27	17	190,532	172,749	127,021	1.6	158,777	143,957	105,851	2.0	2 to 7
28	17	197,588	179,146	131,725	1.6	164,657	149,289	109,771	1.9	2 to 7

NOTE: See "General Planting Rate Information" and "Check Seed Population" pages for additional information.

NOTE: When using Half Rate (2 To 1) Drive Reduction Package, rates are approximately 50% of given numbers.

NOTE: Always field check seed population to ensure planting rates are correct.

PLANTING RATES FOR BRUSH-TYPE SEED METERS (STANDARD DRIVE) APPROXIMATE HILLS/ACRE FOR VARIOUS ROW WIDTHS

Due to variations in cotton seed size, meters equipped with the 12 cell acid-delinted hill-drop cotton discs will plant from 3 to 6 seeds per cell. Select proper disc for seed size range to be planted.

To determine planter transmission setting, **determine desired hill spacing and select the transmission ratio closest to the hill spacing in inches on the chart. To decrease population increase spacing. To increase population decrease spacing.**

To determine population per acre, **determine average seeds per hill and hills per acre by doing a field check. Measure 1/1000 of an acre (1/1000 acre = Length of row 17' 5" for 30" row width, 23' 9" for 22" row width and 26' 2" for 20" row width). Multiply average seeds per hill by hills per acre. EXAMPLE: 4 seeds per hill x (13 hills x 1000) = 52,000**

Transmission Sprockets		NUMBER OF HILLS PER ACRE 12 Cell Hill-Drop Cotton, Acid-Delinted			Average Hill Spacing In Inches	Speed Range (MPH)
Drive	Drive	20" Rows	22" Rows	30" Rows		
17	28	24,279	22,013	16,186	12.9	2 to 8
17	27	25,178	22,828	16,785	12.5	2 to 8
17	26	26,147	23,706	17,431	12.0	2 to 8
19	28	27,135	24,602	18,090	11.6	2 to 8
19	27	28,140	25,514	18,760	11.1	2 to 8
17	24	28,325	25,681	18,883	11.1	2 to 8
17	23	29,556	26,797	19,704	10.6	2 to 8
19	25	30,392	27,555	20,261	10.3	2 to 8
19	24	31,658	28,703	21,105	9.9	2 to 8
23	28	32,847	29,781	21,898	9.5	2 to 8
19	23	33,033	29,950	22,022	9.5	2 to 8
24	28	34,275	31,076	22,850	9.2	2 to 8
24	27	35,546	32,228	23,697	8.8	2 to 8
17	19	35,780	32,440	23,853	8.8	2 to 8
24	26	36,912	33,467	24,608	8.5	2 to 8
26	28	37,133	33,667	24,755	8.4	2 to 8
24	25	38,388	34,805	25,592	8.2	2 to 8
26	27	38,507	34,913	25,671	8.1	2 to 8
23	23	39,989	36,256	26,659	7.8	2 to 8
27	26	41,526	37,650	27,684	7.6	2 to 8
24	23	41,727	37,832	27,818	7.5	2 to 8
25	23	43,466	39,409	28,977	7.2	2 to 8
19	17	44,693	40,521	29,795	7.0	2 to 8
27	24	44,987	40,788	29,991	7.0	2 to 8
28	24	46,653	42,299	31,102	6.7	2 to 8
23	19	48,407	43,889	32,271	6.5	2 to 8
28	23	48,681	44,137	32,454	6.5	2 to 8
24	19	50,511	45,797	33,674	6.2	2 to 8
25	19	52,616	47,705	35,077	6.0	2 to 8
23	17	54,102	49,052	36,068	5.8	2 to 8
26	19	54,720	49,613	36,480	5.7	2 to 7
27	19	56,825	51,521	37,883	5.5	2 to 7
28	19	58,931	53,430	39,287	5.3	2 to 7
26	17	61,158	55,450	40,772	5.1	2 to 7
27	17	63,510	57,582	42,340	4.9	2 to 7
28	17	65,862	59,715	43,908	4.8	2 to 7

NOTE: See "General Planting Rate Information" and "Check Seed Population" pages for additional information.

NOTE: When using Half Rate (2 To 1) Drive Reduction Package, rates are approximately 50% of given numbers.

NOTE: Always field check seed population to ensure planting rates are correct.

PLANTING RATES FOR BRUSH-TYPE SEED METERS (STANDARD DRIVE)
APPROXIMATE SEEDS/ACRE FOR 15"/18"/19"/30"/36"/38" ROW WIDTHS

Transmission Sprockets		54 Cell Soybean						Average Seed Spacing In Inches	Speed Range (MPH)
Drive	Driven	7.5" Rows or 15" Rows	18" Rows	19" Rows	30" Rows	36" Rows	38" Rows		
15	28	128,529	107,107	101,470	64,264	53,554	50,735	3.3	2 to 8
15	27	133,289	111,074	105,228	66,644	55,537	52,614	3.1	2 to 8
15	26	138,415	115,346	109,275	69,208	57,673	54,638	3	2 to 8
15	25	143,952	119,960	113,646	71,976	59,980	56,823	2.9	2 to 8
17	28	145,666	121,388	114,999	72,833	60,694	57,500	2.9	2 to 8
17	27	151,061	125,884	119,258	75,530	62,942	59,629	2.8	2 to 8
17	26	156,871	130,726	123,845	78,435	65,363	61,923	2.7	2 to 8
19	28	162,803	135,669	128,529	81,401	67,835	64,264	2.6	2 to 8
19	27	168,833	140,694	133,289	84,416	70,347	66,644	2.5	2 to 8
17	24	169,943	141,619	134,166	84,972	70,810	67,083	2.5	2 to 8
17	23	177,332	147,777	139,999	88,666	73,888	70,000	2.4	2 to 8
19	25	182,339	151,949	143,952	91,170	75,975	71,976	2.3	2 to 8
19	24	189,937	158,281	149,950	94,968	79,140	74,975	2.2	2 to 8
23	28	197,077	164,231	155,587	98,539	82,115	77,794	2.1	2 to 8
19	23	198,195	165,162	156,470	99,097	82,581	78,235	2.1	2 to 8
24	28	205,646	171,371	162,352	102,823	85,686	81,176	2	2 to 8
24	27	213,262	177,718	168,365	106,631	88,859	84,182	2	2 to 8
17	19	214,665	178,888	169,473	107,333	89,444	84,736	1.9	2 to 8
24	26	221,465	184,554	174,840	110,732	92,277	87,420	1.9	2 to 8
26	28	222,783	185,652	175,881	111,391	92,826	87,941	1.9	2 to 8
24	25	230,323	191,936	181,834	115,162	95,968	90,917	1.8	2 to 8
26	27	231,034	192,528	182,395	115,517	96,264	91,198	1.8	2 to 8
23	23	239,920	199,933	189,410	119,960	99,967	94,705	1.7	2 to 8
27	26	249,148	207,623	196,695	124,574	103,812	98,348	1.7	2 to 8
24	23	250,351	208,626	197,646	125,176	104,313	98,823	1.7	2 to 8
25	23	260,783	217,319	205,881	130,391	108,659	102,940	1.6	2 to 8
19	17	268,146	223,455	211,694	134,073	111,727	105,847	1.6	2 to 8
27	24	269,910	224,925	213,087	134,955	112,462	106,543	1.5	2 to 8
28	24	279,907	233,255	220,979	139,953	116,628	110,489	1.5	2 to 8
23	19	290,429	242,024	229,286	145,215	121,012	114,643	1.4	2 to 8
28	23	292,076	243,397	230,587	146,038	121,699	115,293	1.4	2 to 8
24	19	303,057	252,547	239,255	151,528	126,274	119,628	1.4	2 to 8
25	19	315,684	263,070	249,224	157,842	131,535	124,612	1.3	2 to 8
23	17	324,598	270,498	256,261	162,299	135,249	128,131	1.3	2 to 8
26	19	328,311	273,593	259,193	164,156	136,796	129,597	1.3	2 to 8
27	19	340,939	284,116	269,162	170,469	142,058	134,581	1.2	2 to 8
28	19	353,566	294,639	279,131	176,783	147,319	139,566	1.2	2 to 8
26	17	366,936	305,780	289,687	183,468	152,890	144,843	1.1	2 to 8
27	17	381,049	317,541	300,828	190,525	158,771	150,414	1.1	2 to 8
28	17	395,162	329,302	311,970	197,581	164,651	155,985	1.1	2 to 8

NOTE: See “General Planting Rate Information” and “Check Seed Population” pages for additional information.

NOTE: When using Half Rate (2 To 1) Drive Reduction Package, rates are approximately 50% of given numbers.

NOTE: Always field check seed population to ensure planting rates are correct.

VACUUM PLANTING RATES FOR CORN / SUNFLOWER 40 CELL DISC
15 TOOTH CONTACT WHEEL DRIVE SPROCKET
APPROXIMATE SEEDS / ACRE FOR VARIOUS ROW WIDTHS

20" Rows	22" Rows	30" Rows	Transmission Sprockets Drive	Transmission Sprockets Driven	Recomm. Speed Range (MPH)	Average Seed Spacing In Inches
22,722	20,656	15,148	15	30*	4 to 6	13.8
24,345	22,132	16,230	15	28	4 to 6	12.9
25,246	22,951	16,831	15	27	4 to 6	12.4
26,217	23,834	17,478	15	26	4 to 6	12.0
27,266	24,787	18,177	15	25	4 to 6	11.5
27,591	25,082	18,394	17	28	4 to 6	11.4
28,402	25,820	18,935	15	24	4 to 6	11.0
28,613	26,011	19,075	17	27	4 to 6	11.0
29,637	26,943	19,758	15	23	4 to 6	10.6
29,713	27,012	19,809	17	26	4 to 6	10.6
30,837	28,033	20,558	19	28	4 to 6	10.2
30,902	28,092	20,601	17	25	4 to 6	10.1
31,979	29,072	21,319	19	27	4 to 6	9.8
32,189	29,263	21,459	17	24	4 to 6	9.7
33,209	30,190	22,139	19	26	4 to 6	9.4
33,589	30,535	22,392	17	23	4 to 6	9.3
34,537	31,397	23,025	19	25	4 to 6	9.1
35,876	32,615	23,918	15	19	4 to 6	8.7
35,976	32,706	23,984	19	24	4 to 6	8.7
37,329	33,935	24,886	23	28	4 to 6	8.4
37,540	34,128	25,027	19	23	4 to 6	8.4
38,711	35,192	25,807	23	27	4 to 6	8.1
38,952	35,411	25,968	24	28	4 to 6	8.1
40,097	36,452	26,731	15	17	4 to 6	7.8
40,394	36,722	26,929	24	27	4 to 6	7.8
40,660	36,964	27,107	17	19	4 to 6	7.7
41,808	38,007	27,872	23	25	4 to 6	7.5
42,198	38,361	28,132	26	28	4 to 6	7.4
43,550	39,591	29,033	23	24	4 to 6	7.2
43,626	39,660	29,084	24	25	4 to 6	7.2
43,820	39,837	29,214	27	28	4 to 6	7.2
45,443	41,312	30,296	23	23	4 to 6	6.9
47,127	42,842	31,418	28	27	4 to 6	6.7
47,191	42,901	31,461	27	26	4 to 6	6.6
47,419	43,108	31,613	24	23	4 to 6	6.6
48,939	44,490	32,626	28	26	4 to 6	6.4
49,079	44,617	32,719	27	25	4 to 6	6.4
49,395	44,905	32,930	25	23	4 to 6	6.3
50,790	46,173	33,860	19	17	4 to 6	6.2
51,124	46,476	34,083	27	24	4 to 6	6.1
51,371	46,701	34,247	26	23	4 to 6	6.1
53,017	48,198	35,345	28	24	4 to 6	5.9
53,347	48,497	35,564	27	23	4 to 6	5.9
55,011	50,010	36,674	23	19	4 to 6	5.7
55,322	50,293	36,882	28	23	4 to 6	5.7
57,402	52,184	38,268	24	19	4 to 6	5.5
59,794	54,358	39,863	25	19	4 to 6	5.2
61,482	55,893	40,988	23	17	4 to 6	5.1
62,186	56,533	41,457	26	19	4 to 6	5.0
64,155	58,323	42,770	24	17	4 to 6	4.9
64,578	58,707	43,052	27	19	4 to 6	4.9
66,829	60,753	44,552	25	17	4 to 6	4.7
66,969	60,881	44,646	28	19	4 to 6	4.7
69,502	63,183	46,335	26	17	4 to 6	4.5
69,680	63,345	46,453	23	15	4 to 6	4.5
72,175	65,614	48,117	27	17	4 to 6	4.3

NOTE: See "General Planting Rate Information" and "Checking Seed Population" (located in operator's manual) pages for additional information. Always check seed population in the field to ensure planting rates are correct.

VACUUM PLANTING RATES FOR CORN /SUNFLOWER 40 CELL DISC
22 TOOTH CONTACT WHEEL DRIVE SPROCKET
APPROXIMATE SEEDS / ACRE FOR VARIOUS ROW WIDTHS

20" Rows	22" Rows	30" Rows	Transmission Sprockets Drive	Transmission Sprockets Driven	Recomm. Speed Range (MPH)	Average Seed Spacing In Inches
35,706	32,459	23,804	15	28	4 to 6	8.8
37,028	33,662	24,685	15	27	4 to 6	8.5
38,452	34,957	25,635	15	26	4 to 6	8.2
39,991	36,355	26,661	15	25	4 to 6	7.8
40,456	36,788	26,977	17	28	4 to 6	7.7
41,656	37,870	27,771	15	24	4 to 6	7.5
41,965	38,150	27,976	17	27	4 to 6	7.5
43,468	39,516	28,978	15	23	4 to 6	7.2
43,579	39,617	29,052	17	26	4 to 6	7.2
45,227	41,116	30,152	19	28	4 to 6	6.9
45,322	41,202	30,215	17	25	4 to 6	6.9
46,903	42,638	31,268	19	27	4 to 6	6.7
47,211	42,919	31,474	17	24	4 to 6	6.6
48,707	44,278	32,471	19	26	4 to 6	6.4
49,264	44,785	32,842	17	23	4 to 6	6.3
50,654	46,049	33,769	19	25	4 to 6	6.2
52,618	47,835	35,079	15	19	4 to 6	5.9
52,765	47,968	35,176	19	24	4 to 6	5.9
54,749	49,771	36,499	23	28	4 to 6	5.8
55,059	50,053	36,706	19	23	4 to 6	5.7
56,776	51,615	37,851	23	27	4 to 6	5.6
57,129	51,658	38,086	24	28	4 to 6	5.5
58,809	53,463	39,206	15	17	4 to 6	5.4
59,245	53,859	39,496	24	27	4 to 6	5.3
59,635	54,213	39,757	17	19	4 to 6	5.3
61,319	55,744	40,879	23	25	4 to 6	5.1
61,890	56,264	41,259	26	28	4 to 6	5.1
63,874	58,067	42,583	23	24	4 to 6	4.9
63,985	58,168	42,656	24	25	4 to 6	4.9
64,270	58,428	42,847	27	28	4 to 6	4.9
66,650	60,592	44,434	23	23	4 to 6	4.7
69,119	62,836	46,079	28	27	4 to 6	4.6
69,214	62,922	46,143	27	26	4 to 6	4.5
69,549	63,226	46,365	24	23	4 to 6	4.5
71,777	65,252	47,851	28	26	4 to 6	4.4
71,983	65,439	47,989	27	25	4 to 6	4.4
72,446	65,861	48,297	25	23	4 to 6	4.3
74,491	67,720	49,662	19	17	4 to 6	4.2
74,982	68,165	49,988	27	24	4 to 6	4.2
75,344	68,494	50,230	26	23	4 to 6	4.2
77,759	70,690	51,839	28	24	4 to 6	4.0
78,242	71,129	52,161	27	23	4 to 6	4.0
80,682	73,348	53,788	23	19	4 to 6	3.9
81,139	73,763	54,093	28	23	4 to 6	3.9
84,190	76,536	56,127	24	19	4 to 6	3.7
87,698	79,725	58,466	25	19	4 to 6	3.6
90,174	81,976	60,116	23	17	4 to 6	3.5
91,206	82,915	60,804	26	19	4 to 6	3.4
94,095	85,541	62,730	24	17	4 to 6	3.3
94,714	86,104	63,143	27	19	4 to 6	3.3
98,015	89,105	65,344	25	17	4 to 6	3.2
98,222	89,292	65,481	28	19	4 to 6	3.2
101,936	92,669	67,957	26	17	4 to 6	3.1
102,198	92,907	68,131	23	15	4 to 6	3.0
105,856	96,234	70,571	27	17	4 to 6	2.9

NOTE: See "General Planting Rate Information" and "Check Seed Population" pages for more information. Always field check seed population to verify planting rates.

VACUUM PLANTING RATES FOR CORN / SUNFLOWER 40 CELL DISC
28 TOOTH CONTACT WHEEL DRIVE SPROCKET
APPROXIMATE SEEDS / ACRE FOR VARIOUS ROW WIDTHS

20" Rows	22" Rows	30" Rows	Transmission Sprockets Drive	Transmission Sprockets Driven	Recomm. Speed Range (MPH)	Average Seed Spacing In Inches
45,443	41,313	30,295	15	28	4 to 6	6.9
47,126	42,842	31,417	15	27	4 to 6	6.6
48,939	44,490	32,626	15	26	4 to 6	6.4
50,896	46,270	33,931	15	25	4 to 6	6.1
51,503	46,821	34,335	17	28	4 to 6	6.0
53,017	48,198	35,345	15	24	4 to 6	5.9
53,410	48,555	35,607	17	27	4 to 6	5.9
55,323	50,293	36,882	15	23	4 to 6	5.7
55,465	50,423	36,976	17	26	4 to 6	5.7
57,562	52,329	38,374	19	28	4 to 6	5.5
57,683	52,439	38,455	17	25	4 to 6	5.5
59,693	54,267	39,796	19	27	4 to 6	5.3
60,086	54,624	40,057	17	24	4 to 6	5.3
61,990	56,354	41,326	19	26	4 to 6	5.1
62,698	56,999	41,799	17	23	4 to 6	5.0
64,470	58,608	42,979	19	25	4 to 6	4.9
66,969	60,881	44,646	15	19	4 to 6	4.7
67,156	61,050	44,770	19	24	4 to 6	4.7
69,680	63,346	46,453	23	28	4 to 6	4.5
70,075	63,705	46,717	19	23	4 to 6	4.5
72,261	65,691	48,174	23	27	4 to 6	4.4
72,710	66,099	48,473	24	28	4 to 6	4.3
74,848	68,044	49,898	15	17	4 to 6	4.2
75,403	68,548	50,269	24	27	4 to 6	4.2
75,898	68,999	50,599	17	19	4 to 6	4.1
78,042	70,947	52,028	23	25	4 to 6	4.0
78,769	71,608	52,513	26	28	4 to 6	4.0
81,293	73,904	54,196	23	24	4 to 6	3.9
81,435	74,032	54,290	24	25	4 to 6	3.9
81,798	74,362	54,532	27	28	4 to 6	3.8
84,828	77,116	56,552	23	23	4 to 6	3.7
87,969	79,972	58,646	28	27	4 to 6	3.6
88,090	80,082	58,727	27	26	4 to 6	3.6
88,516	80,469	59,010	24	23	4 to 6	3.5
91,353	83,048	60,903	28	26	4 to 6	3.4
91,614	83,285	61,076	27	25	4 to 6	3.4
92,204	83,823	61,470	25	23	4 to 6	3.4
94,808	86,189	63,205	19	17	4 to 6	3.3
95,432	86,756	63,621	27	24	4 to 6	3.3
95,892	87,175	63,928	26	23	4 to 6	3.3
98,966	89,969	65,977	28	24	4 to 6	3.2
99,581	90,528	66,387	27	23	4 to 6	3.1
102,686	93,352	68,457	23	19	4 to 6	3.0
103,269	93,881	68,846	28	23	4 to 6	3.0
107,151	97,410	71,434	24	19	4 to 6	2.9
111,615	101,469	74,410	25	19	4 to 6	2.8
114,767	104,334	76,512	23	17	4 to 6	2.7
116,080	105,527	77,387	26	19	4 to 6	2.7
119,757	108,870	79,838	24	17	4 to 6	2.6
120,545	109,587	80,363	27	19	4 to 6	2.6
124,747	113,406	83,165	25	17	4 to 6	2.5
125,009	113,645	83,339	28	19	4 to 6	2.5
129,736	117,943	86,491	26	17	4 to 6	2.4
130,070	118,245	86,713	23	15	4 to 6	2.4
134,727	122,479	89,817	27	17	4 to 6	2.3

NOTE: See "General Planting Rate Information" and "Check Seed Population" pages for more information. Always field check seed population to verify planting rates.

VACUUM PLANTING RATES FOR SUGAR BEET / MILO / SPECIALTY / SOYBEAN 60 CELL DISC
15 TOOTH CONTACT WHEEL DRIVE SPROCKET
APPROXIMATE SEEDS / ACRE FOR VARIOUS ROW WIDTHS

20" Rows	22" Rows	30" Rows	Transmission Sprockets Drive	Transmission Sprockets Driven	Recomm. Speed Range (MPH)	Average Seed Spacing In Inches
34,083	30,984	22,722	15	30*	4 to 6	9.2
36,517	33,197	24,345	15	28	4 to 6	8.6
37,870	34,427	25,246	15	27	4 to 6	8.3
39,326	35,751	26,217	15	26	4 to 6	8.0
40,899	37,181	27,266	15	25	4 to 6	7.7
41,386	37,624	27,591	17	28	4 to 6	7.6
42,603	38,730	28,402	15	24	4 to 6	7.4
42,919	39,017	28,613	17	27	4 to 6	7.3
44,456	40,414	29,637	15	23	4 to 6	7.1
44,570	40,518	29,713	17	26	4 to 6	7.0
46,255	42,050	30,837	19	28	4 to 6	6.8
46,352	42,138	30,902	17	25	4 to 6	6.8
47,968	43,607	31,979	19	27	4 to 6	6.5
48,284	43,894	32,189	17	24	4 to 6	6.5
49,813	45,285	33,209	19	26	4 to 6	6.3
50,383	45,803	33,589	17	23	4 to 6	6.2
51,806	47,096	34,537	19	25	4 to 6	6.1
53,815	48,922	35,876	15	19	4 to 6	5.8
53,964	49,058	35,976	19	24	4 to 6	5.8
55,993	50,903	37,329	23	28	4 to 6	5.6
56,310	51,191	37,540	19	23	4 to 6	5.6
58,067	52,788	38,711	23	27	4 to 6	5.4
58,427	53,116	38,952	24	28	4 to 6	5.4
60,146	54,678	40,097	15	17	4 to 6	5.2
60,591	55,083	40,394	24	27	4 to 6	5.2
60,990	55,445	40,660	17	19	4 to 6	5.1
62,712	57,011	41,808	23	25	4 to 6	5.0
63,296	57,542	42,198	26	28	4 to 6	5.0
65,325	59,386	43,550	23	24	4 to 6	4.8
65,439	59,490	43,626	24	25	4 to 6	4.8
65,731	59,755	43,820	27	28	4 to 6	4.8
68,165	61,968	45,443	23	23	4 to 6	4.6
70,690	64,264	47,127	28	27	4 to 6	4.4
70,787	64,352	47,191	27	26	4 to 6	4.4
71,129	64,663	47,419	24	23	4 to 6	4.4
73,409	66,735	48,939	28	26	4 to 6	4.3
73,618	66,926	49,079	27	25	4 to 6	4.3
74,093	67,357	49,395	25	23	4 to 6	4.2
76,185	69,259	50,790	19	17	4 to 6	4.1
76,686	69,714	51,124	27	24	4 to 6	4.1
77,056	70,051	51,371	26	23	4 to 6	4.1
79,526	72,296	53,017	28	24	4 to 6	3.9
80,020	72,745	53,347	27	23	4 to 6	3.9
82,516	75,014	55,011	23	19	4 to 6	3.8
82,984	75,440	55,322	28	23	4 to 6	3.8
86,103	78,276	57,402	24	19	4 to 6	3.6
89,691	81,537	59,794	25	19	4 to 6	3.5
92,224	83,840	61,482	23	17	4 to 6	3.4
93,279	84,799	62,186	26	19	4 to 6	3.4
96,233	87,485	64,155	24	17	4 to 6	3.3
96,866	88,060	64,578	27	19	4 to 6	3.2
100,243	91,130	66,829	25	17	4 to 6	3.1
100,454	91,322	66,969	28	19	4 to 6	3.1
104,253	94,775	69,502	26	17	4 to 6	3.0
104,520	95,018	69,680	23	15	4 to 6	3.0
108,262	98,420	72,175	27	17	4 to 6	2.9

NOTE: See "General Planting Rate Information" and "Checking Seed Population" (located in operator's manual) pages for additional information. Always check seed population in the field to ensure planting rates are correct.

VACUUM PLANTING RATES FOR MILO / SUGAR BEET / SPECIALTY / SOYBEAN 60 CELL DISCS
22 TOOTH CONTACT WHEEL DRIVE SPROCKET
APPROXIMATE SEEDS / ACRE FOR VARIOUS ROW WIDTHS

20" Rows	22" Rows	30" Rows	Transmission Sprockets Drive	Transmission Sprockets Driven	Recomm. Speed Range (MPH)	Average Seed Spacing In Inches
53,558	48,690	35,706	15	28	4 to 6	5.9
55,542	50,493	37,028	15	27	4 to 6	5.6
57,678	52,435	38,452	15	26	4 to 6	5.4
59,985	54,532	39,990	15	25	4 to 6	5.2
60,700	55,181	40,466	17	28	4 to 6	5.2
62,485	56,804	41,657	15	24	4 to 6	5.0
62,948	57,225	41,965	17	27	4 to 6	5.0
65,202	59,274	43,468	15	23	4 to 6	4.8
65,369	59,426	43,579	17	26	4 to 6	4.8
67,841	61,673	45,227	19	28	4 to 6	4.6
67,984	61,803	45,322	17	25	4 to 6	4.6
70,353	63,958	46,902	19	27	4 to 6	4.5
70,816	64,378	47,211	17	24	4 to 6	4.4
73,059	66,417	48,706	19	26	4 to 6	4.3
73,895	67,177	49,263	17	23	4 to 6	4.2
75,982	69,074	50,654	19	25	4 to 6	4.1
78,928	71,753	52,619	15	19	4 to 6	4.0
79,148	71,952	52,765	19	24	4 to 6	4.0
82,123	74,657	54,749	23	28	4 to 6	3.8
82,589	75,081	55,059	19	23	4 to 6	3.8
85,165	77,422	56,776	23	27	4 to 6	3.7
85,694	77,903	57,129	24	28	4 to 6	3.7
88,214	80,194	58,809	15	17	4 to 6	3.6
88,867	80,789	59,245	24	27	4 to 6	3.5
89,452	81,320	59,635	17	19	4 to 6	3.5
91,978	83,616	61,318	23	25	4 to 6	3.4
92,835	84,395	61,890	26	28	4 to 6	3.4
95,810	87,100	63,873	23	24	4 to 6	3.3
95,977	87,252	63,985	24	25	4 to 6	3.3
96,405	87,641	64,270	27	28	4 to 6	3.3
99,976	90,887	66,651	23	23	4 to 6	3.1
103,679	94,253	69,119	28	27	4 to 6	3.0
103,821	94,383	69,214	27	26	4 to 6	3.0
104,323	94,839	69,548	24	23	4 to 6	3.0
107,666	97,878	71,778	28	26	4 to 6	2.9
107,974	98,158	71,983	27	25	4 to 6	2.9
108,669	98,790	72,446	25	23	4 to 6	2.9
111,738	101,580	74,492	19	17	4 to 6	2.8
112,473	102,248	74,982	27	24	4 to 6	2.8
113,016	102,742	75,344	26	23	4 to 6	2.8
116,638	106,035	77,759	28	24	4 to 6	2.7
117,363	106,694	78,242	27	23	4 to 6	2.7
121,023	110,021	80,682	23	19	4 to 6	2.6
121,710	110,645	81,140	28	23	4 to 6	2.6
126,285	114,805	84,190	24	19	4 to 6	2.5
131,547	119,588	87,698	25	19	4 to 6	2.4
135,261	122,965	90,174	23	17	4 to 6	2.3
136,809	124,372	91,206	26	19	4 to 6	2.3
141,142	128,311	94,095	24	17	4 to 6	2.2
142,071	129,155	94,714	27	19	4 to 6	2.2
147,023	133,657	98,015	25	17	4 to 6	2.1
147,333	133,939	98,222	28	19	4 to 6	2.1
152,904	139,004	101,936	26	17	4 to 6	2.1
153,296	139,360	102,197	23	15	4 to 6	2.0
158,785	144,350	105,857	27	17	4 to 6	2.0

NOTE: See "General Planting Rate Information" and "Check Seed Population" pages for more information. Always field check seed population to verify planting rates.

VACUUM PLANTING RATES FOR MILO / SUGAR BEET / SPECIALTY / SOYBEAN 60 CELL DISCS
28 TOOTH CONTACT WHEEL DRIVE SPROCKET
APPROXIMATE SEEDS / ACRE FOR VARIOUS ROW WIDTHS

20" Rows	22" Rows	30" Rows	Transmission Sprockets Drive	Transmission Sprockets Driven	Recomm. Speed Range (MPH)	Average Seed Spacing In Inches
68,165	61,968	45,444	15	28	4 to 6	4.6
70,690	64,264	47,127	15	27	4 to 6	4.4
73,409	66,735	48,939	15	26	4 to 6	4.3
76,345	69,405	50,897	15	25	4 to 6	4.1
77,254	70,231	51,503	17	28	4 to 6	4.1
79,526	72,297	53,017	15	24	4 to 6	3.9
80,115	72,832	53,410	17	27	4 to 6	3.9
82,984	75,440	55,323	15	23	4 to 6	3.8
83,197	75,633	55,464	17	26	4 to 6	3.8
86,343	78,493	57,562	19	28	4 to 6	3.6
86,525	78,659	57,683	17	25	4 to 6	3.6
89,541	81,401	59,694	19	27	4 to 6	3.5
90,130	81,936	60,086	17	24	4 to 6	3.5
92,984	84,531	61,990	19	26	4 to 6	3.4
94,048	85,499	62,699	17	23	4 to 6	3.3
96,704	87,913	64,469	19	25	4 to 6	3.2
100,454	91,322	66,969	15	19	4 to 6	3.1
100,733	91,576	67,155	19	24	4 to 6	3.1
104,520	95,018	69,680	23	28	4 to 6	3.0
105,113	95,557	70,075	19	23	4 to 6	3.0
108,391	98,538	72,261	23	27	4 to 6	2.9
109,065	99,150	72,710	24	28	4 to 6	2.9
112,272	102,066	74,848	15	17	4 to 6	2.8
113,104	102,822	75,403	24	27	4 to 6	2.8
113,848	103,498	75,899	17	19	4 to 6	2.8
117,063	106,421	78,042	23	25	4 to 6	2.7
118,153	107,412	78,769	26	28	4 to 6	2.7
121,940	110,855	81,293	23	24	4 to 6	2.6
122,152	111,048	81,435	24	25	4 to 6	2.6
122,698	111,543	81,798	27	28	4 to 6	2.6
127,242	115,674	84,828	23	23	4 to 6	2.5
131,955	119,959	87,970	28	27	4 to 6	2.4
132,136	120,124	88,091	27	26	4 to 6	2.4
132,774	120,704	88,516	24	23	4 to 6	2.4
137,030	124,573	91,353	28	26	4 to 6	2.3
137,421	124,928	91,614	27	25	4 to 6	2.3
138,306	125,733	92,204	25	23	4 to 6	2.3
142,212	129,283	94,808	19	17	4 to 6	2.2
143,147	130,134	95,431	27	24	4 to 6	2.2
143,839	130,762	95,892	26	23	4 to 6	2.2
148,449	134,954	98,966	28	24	4 to 6	2.1
149,371	135,792	99,581	27	23	4 to 6	2.1
154,030	140,027	102,686	23	19	4 to 6	2.0
154,903	140,821	103,269	28	23	4 to 6	2.0
160,727	146,115	107,151	24	19	4 to 6	2.0
167,424	152,203	111,616	25	19	4 to 6	1.9
172,151	156,501	114,767	23	17	4 to 6	1.8
174,121	158,291	116,080	26	19	4 to 6	1.8
179,636	163,305	119,757	24	17	4 to 6	1.7
180,817	164,380	120,545	27	19	4 to 6	1.7
187,120	170,110	124,747	25	17	4 to 6	1.7
187,514	170,468	125,010	28	19	4 to 6	1.7
194,605	176,914	129,737	26	17	4 to 6	1.6
195,104	177,368	130,070	23	15	4 to 6	1.6
202,090	183,718	134,727	27	17	4 to 6	1.6

NOTE: See "General Planting Rate Information" and "Check Seed Population" pages for more information. Always field check seed population to verify planting rates.

VACUUM PLANTING RATES FOR SPECIALTY 60 CELL DISC
44 TOOTH CONTACT WHEEL DRIVE SPROCKET
APPROXIMATE SEEDS / ACRE FOR VARIOUS ROW WIDTHS

20" Rows	22" Rows	30" Rows	Transmission Sprockets Drive	Transmission Sprockets Driven	Recomm. Speed Range (MPH)	Average Seed Spacing In Inches
107,110	97,372	71,406	15	28	4 to 6	2.9
111,077	100,979	74,051	15	27	4 to 6	2.8
115,349	104,863	76,899	15	26	4 to 6	2.7
119,963	109,057	79,975	15	25	4 to 6	2.6
121,391	110,355	80,927	17	28	4 to 6	2.6
124,961	113,601	83,308	15	24	4 to 6	2.5
125,887	114,443	83,925	17	27	4 to 6	2.5
130,394	118,540	86,930	15	23	4 to 6	2.4
130,729	118,844	87,153	17	26	4 to 6	2.4
135,672	123,338	90,448	19	28	4 to 6	2.3
135,958	123,598	90,639	17	25	4 to 6	2.3
140,697	127,907	93,798	19	27	4 to 6	2.2
141,623	128,748	94,415	17	24	4 to 6	2.2
146,109	132,826	97,406	19	26	4 to 6	2.1
147,780	134,346	98,520	17	23	4 to 6	2.1
151,953	138,139	101,302	19	25	4 to 6	2.1
157,846	143,496	105,231	15	19	4 to 6	2.0
158,284	143,895	105,523	19	24	4 to 6	2.0
164,235	149,304	109,490	23	28	4 to 6	1.9
165,166	150,151	110,111	19	23	4 to 6	1.9
170,318	154,834	113,545	23	27	4 to 6	1.8
171,376	155,796	114,250	24	28	4 to 6	1.8
176,416	160,378	117,611	15	17	4 to 6	1.8
177,723	161,566	118,482	24	27	4 to 6	1.8
178,892	162,629	119,261	17	19	4 to 6	1.8
183,943	167,221	122,629	23	25	4 to 6	1.7
185,657	168,779	123,771	26	28	4 to 6	1.7
191,607	174,189	127,738	23	24	4 to 6	1.6
191,941	174,491	127,960	24	25	4 to 6	1.6
192,797	175,270	128,532	27	28	4 to 6	1.6
199,938	181,762	133,292	23	23	4 to 6	1.6
207,343	188,494	138,229	28	27	4 to 6	1.5
207,628	188,753	138,419	27	26	4 to 6	1.5
208,631	189,665	139,087	24	23	4 to 6	1.5
215,318	195,744	143,545	28	26	4 to 6	1.5
215,933	196,303	143,955	27	25	4 to 6	1.5
217,324	197,567	144,883	25	23	4 to 6	1.4
223,460	203,146	148,973	19	17	4 to 6	1.4
224,930	204,482	149,954	27	24	4 to 6	1.4
226,017	205,470	150,678	26	23	4 to 6	1.4
233,261	212,056	155,507	28	24	4 to 6	1.3
234,710	213,373	156,473	27	23	4 to 6	1.3
242,030	220,028	161,354	23	19	4 to 6	1.3
243,403	221,275	162,269	28	23	4 to 6	1.3
	229,594	168,369	24	19	4 to 6	1.2
	239,160	175,384	25	19	4 to 6	1.2
	245,913	180,336	23	17	4 to 6	1.2
	248,727	182,400	26	19	4 to 6	1.1
		188,177	24	17	4 to 6	1.1
		189,415	27	19	4 to 6	1.1
		196,018	25	17	4 to 6	1.1
		196,430	28	19	4 to 6	1.1
		203,858	26	17	4 to 6	1.0
		204,381	23	15	4 to 6	1.0
		211,699	27	17	4 to 6	1.0

NOTE: Planting rates over 250,000 seeds/acre are not recommended with subject seed disc and/or drive ratio.

NOTE: See "General Planting Rate Information" and "Check Seed Population" pages for more information. Always field check seed population to verify planting rates.

VACUUM PLANTING RATES FOR SOYBEAN 120 CELL DISC
22 TOOTH CONTACT WHEEL DRIVE SPROCKET
APPROXIMATE SEEDS / ACRE FOR VARIOUS ROW WIDTHS

20" Rows	22" Rows	30" Rows	Transmission Sprockets Drive	Transmission Sprockets Driven	Recomm. Speed Range (MPH)	Average Seed Spacing In Inches
107,117	97,379	71,411	15	28	4 to 6	2.9
111,084	100,986	74,056	15	27	4 to 6	2.8
115,357	104,870	76,904	15	26	4 to 6	2.7
119,971	109,065	79,981	15	25	4 to 6	2.6
121,399	110,363	80,933	17	28	4 to 6	2.6
124,970	113,609	83,313	15	24	4 to 6	2.5
125,895	114,450	83,930	17	27	4 to 6	2.5
130,403	118,548	86,935	15	23	4 to 6	2.4
130,738	118,852	87,158	17	26	4 to 6	2.4
135,681	123,347	90,454	19	28	4 to 6	2.3
135,967	123,606	90,645	17	25	4 to 6	2.3
140,707	127,915	93,804	19	27	4 to 6	2.2
141,632	128,757	94,422	17	24	4 to 6	2.2
146,118	132,835	97,412	19	26	4 to 6	2.1
147,790	134,355	98,527	17	23	4 to 6	2.1
151,963	138,148	101,309	19	25	4 to 6	2.1
157,857	143,506	105,238	15	19	4 to 6	2.0
158,295	143,905	105,530	19	24	4 to 6	2.0
164,246	149,315	109,497	23	28	4 to 6	1.9
165,177	150,161	110,118	19	23	4 to 6	1.9
170,329	154,845	113,553	23	27	4 to 6	1.8
171,387	155,806	114,258	24	28	4 to 6	1.8
176,428	160,389	117,619	15	17	4 to 6	1.8
177,735	161,577	118,490	24	27	4 to 6	1.8
178,904	162,640	119,269	17	19	4 to 6	1.8
183,955	167,232	122,637	23	25	4 to 6	1.7
185,669	168,790	123,780	26	28	4 to 6	1.7
191,620	174,200	127,747	23	24	4 to 6	1.6
191,954	174,503	127,969	24	25	4 to 6	1.6
192,810	175,282	128,540	27	28	4 to 6	1.6
199,952	181,774	133,301	23	23	4 to 6	1.6
207,357	188,507	138,238	28	27	4 to 6	1.5
207,642	188,766	138,428	27	26	4 to 6	1.5
208,645	189,677	139,097	24	23	4 to 6	1.5
215,333	195,757	143,555	28	26	4 to 6	1.5
215,948	196,316	143,965	27	25	4 to 6	1.5
217,339	197,581	144,892	25	23	4 to 6	1.4
223,475	203,159	148,984	19	17	4 to 6	1.4
224,946	204,496	149,964	27	24	4 to 6	1.4
226,032	205,484	150,688	26	23	4 to 6	1.4
233,277	212,070	155,518	28	24	4 to 6	1.3
234,726	213,387	156,484	27	23	4 to 6	1.3
242,047	220,042	161,364	23	19	4 to 6	1.3
243,419	221,290	162,280	28	23	4 to 6	1.3
	229,610	168,380	24	19	4 to 6	1.2
	239,177	175,396	25	19	4 to 6	1.2
	245,930	180,349	23	17	4 to 6	1.2
	248,744	182,412	26	19	4 to 6	1.1
NOTE: Planting rates over 250,000 seeds/acre are not recommended with subject seed disc and/or drive ratio.		188,190	24	17	4 to 6	1.1
		189,428	27	19	4 to 6	1.1
		196,031	25	17	4 to 6	1.1
		196,444	28	19	4 to 6	1.1
		203,872	26	17	4 to 6	1.0
		204,395	23	15	4 to 6	1.0
		211,713	27	17	4 to 6	1.0

NOTE: See "General Planting Rate Information" and "Check Seed Population" pages for more information. Always field check seed population to verify planting rates.

VACUUM PLANTING RATES FOR SOYBEAN 120 CELL DISC
28 TOOTH CONTACT WHEEL DRIVE SPROCKET
APPROXIMATE SEEDS / ACRE FOR VARIOUS ROW WIDTHS

20" Rows	22" Rows	30" Rows	Transmission Sprockets Drive	Transmission Sprockets Driven	Recomm. Speed Range (MPH)	Average Seed Spacing In Inches
136,331	123,937	90,887	15	28	4 to 6	2.3
141,380	128,527	94,253	15	27	4 to 6	2.2
146,818	133,471	97,878	15	26	4 to 6	2.1
152,690	138,809	101,794	15	25	4 to 6	2.1
154,508	140,462	103,005	17	28	4 to 6	2.0
159,052	144,593	106,035	15	24	4 to 6	2.0
160,231	145,664	106,820	17	27	4 to 6	2.0
165,968	150,880	110,645	15	23	4 to 6	1.9
166,393	151,267	110,929	17	26	4 to 6	1.9
172,685	156,987	115,124	19	28	4 to 6	1.8
173,049	157,317	115,366	17	25	4 to 6	1.8
179,081	162,801	119,387	19	27	4 to 6	1.8
180,259	163,872	120,173	17	24	4 to 6	1.7
185,969	169,063	123,979	19	26	4 to 6	1.7
188,097	170,997	125,398	17	23	4 to 6	1.7
193,408	175,825	128,938	19	25	4 to 6	1.6
200,908	182,644	133,939	15	19	4 to 6	1.6
201,466	183,151	134,311	19	24	4 to 6	1.6
209,040	190,037	139,360	23	28	4 to 6	1.5
210,226	191,114	140,151	19	23	4 to 6	1.5
216,783	197,075	144,522	23	27	4 to 6	1.4
218,129	198,299	145,419	24	28	4 to 6	1.4
224,545	204,131	149,696	15	17	4 to 6	1.4
226,208	205,644	150,805	24	27	4 to 6	1.4
227,696	206,996	151,797	17	19	4 to 6	1.4
234,125	212,841	156,083	23	25	4 to 6	1.3
236,306	214,824	157,538	26	28	4 to 6	1.3
243,880	221,709	162,587	23	24	4 to 6	1.3
244,305	222,095	162,870	24	25	4 to 6	1.3
245,395	223,087	163,597	27	28	4 to 6	1.3
	231,349	169,656	23	23	4 to 6	1.2
	239,917	175,939	28	27	4 to 6	1.2
	240,247	176,181	27	26	4 to 6	1.2
	241,408	177,032	24	23	4 to 6	1.2
	249,145	182,706	28	26	4 to 6	1.1
	249,857	183,228	27	25	4 to 6	1.1
		184,409	25	23	4 to 6	1.1
		189,615	19	17	4 to 6	1.1
		190,863	27	24	4 to 6	1.1
		191,785	26	23	4 to 6	1.1
NOTE: Planting rates over 250,000 seeds/acre are not recommended with subject seed disc and/or drive ratio.		197,932	28	24	4 to 6	1.1
		199,161	27	23	4 to 6	1.0
		205,373	23	19	4 to 6	1.0
		206,538	28	23	4 to 6	1.0
		214,302	24	19	4 to 6	1.0
		223,231	25	19	4 to 6	0.9
		229,534	23	17	4 to 6	0.9
		232,161	26	19	4 to 6	0.9
		239,514	24	17	4 to 6	0.9
		241,090	27	19	4 to 6	0.9
		249,494	25	17	4 to 6	0.8
			28	19	4 to 6	0.8
			26	17	4 to 6	0.8
			23	15	4 to 6	0.8
			27	17	4 to 6	0.8

NOTE: See "General Planting Rate Information" and "Check Seed Population" pages for more information. Always field check seed population to verify planting rates.

Wheat Disc Section

Use a 28 tooth Drive sprocket and a 27 tooth Driven sprocket

Drive	Driven	RPM/GS
27	28	3.671
15	15	3.807
28	27	3.948
27	26	3.953

FOR HYDRAULIC DRIVE (BRUSH-TYPE AND VACUUM) AND ELECTRIC DRIVE (VACUUM)

a. Brush-Type: use the instructions found on page 5-9 to find the seeds per revolution (SDS/REV). The SDS/REV will be relatively constant at all speeds for the Brush-Type Meter

b. Vacuum: use the instructions found on page 5-9 to find the seeds per revolution (SDS/REV) or see the Rate Charts. The SDS/REV will decrease as the disc speed increases (less SDS/REV as ground speed increases) for the True Rate Vacuum Meter.

c. Divide the SDS/REV by the number of Cells to get the SDS/CELL. Some display may not support 54 cells as an option for number of cells on a seed disc, in that case, substitute a useable number of cells (60 or 40) and use that Cell number in the calculation. DO NOT PHYSICALLY CHANGE THE DISC, THE CELL COUNT IS FOR THE MONITOR ONLY.

d. Divide your target population by the SDS/CELL to get your Monitor Population.

Seed Meter Type	Target Population	SDS/REV	Cells	SDS/CELL	Monitor Population
Brush	800,000	465	54	8.611	92,903
Brush	1,200,000	465	54	8.611	139,355
Vacuum	808,755	891	54	16.500	49,015
Vacuum	1,195,655	771	54	14.278	83,742
Vacuum	808,755	891	60	14.85	54,461
Vacuum	1,195,655	771	60	12.85	93,047

PLANTING RATES FOR BRUSH-TYPE SEED METERS (HALF RATE DRIVE)
APPROXIMATE SEEDS/ACRE FOR 15" ROW WIDTH

Transmission Sprockets		Population Factor	Rye 400 SDS/REV, 35.9 SDS/GRAM		Wheat 465 SDS/REV, 39.6 SDS/GRAM		Speed Range (MPH)
Drive	Driven		Population (sds/acre)	Population (lbs/acre)	Population (sds/acre)	Population (lbs/acre)	
15	28	1190.12	476,159	29	553,656	31	4 to 6
15	27	1234.20	493,795	30	574,163	32	4 to 6
15	26	1281.67	512,787	32	596,245	33	4 to 6
15	25	1332.94	533,298	33	620,095	35	4 to 6
17	28	1348.80	539,647	33	627,477	35	4 to 6
15	24	1388.48	555,519	34	645,932	36	4 to 6
17	27	1398.76	559,634	34	650,718	36	4 to 6
15	23	1448.84	579,672	36	674,017	38	4 to 6
17	26	1452.56	581,158	36	675,745	38	4 to 6
19	28	1507.49	603,134	37	701,298	39	4 to 6
17	25	1510.66	604,405	37	702,775	39	4 to 6
19	27	1563.32	625,473	38	727,272	41	4 to 6
17	24	1573.60	629,588	39	732,056	41	4 to 6
19	26	1623.45	649,530	40	755,244	42	4 to 6
17	23	1642.02	656,961	40	763,885	43	4 to 6
19	25	1688.39	675,511	42	785,454	44	4 to 6
15	19	1753.86	701,708	43	815,915	45	4 to 6
19	24	1758.74	703,658	43	818,181	46	4 to 6
23	28	1824.85	730,111	45	848,940	47	4 to 6
19	23	1835.20	734,251	45	853,754	48	4 to 6
23	27	1892.44	757,152	47	880,382	49	4 to 6
24	28	1904.19	761,855	47	885,850	49	4 to 6
15	17	1960.20	784,262	48	911,905	51	4 to 6
23	26	1965.23	786,273	48	914,242	51	4 to 6
24	27	1974.72	790,071	49	918,660	51	4 to 6
25	28	1983.54	793,598	49	922,761	51	4 to 6
17	19	1987.71	795,269	49	924,703	52	4 to 6
23	25	2043.84	817,724	50	950,813	53	4 to 6
24	26	2050.67	820,459	50	953,993	53	4 to 6
25	27	2057.00	822,991	51	956,937	53	4 to 6
26	28	2062.88	825,342	51	959,671	53	4 to 6
23	24	2128.99	851,795	52	990,429	55	4 to 6
24	25	2132.70	853,277	52	992,152	55	4 to 6
25	26	2136.11	854,644	53	993,742	55	4 to 6
26	27	2139.28	855,911	53	995,215	55	4 to 6
27	28	2142.22	857,087	53	996,582	56	4 to 6
15	15	2221.56	888,830	55	1,033,492	58	4 to 6
28	27	2303.84	921,750	57	1,071,769	60	4 to 6
27	26	2307.01	923,016	57	1,073,242	60	4 to 6
26	25	2310.42	924,384	57	1,074,832	60	4 to 6
25	24	2314.13	925,865	57	1,076,554	60	4 to 6
24	23	2318.15	927,475	57	1,078,426	60	4 to 6
28	26	2392.45	957,202	59	1,112,991	62	4 to 6
27	25	2399.28	959,937	59	1,116,171	62	4 to 6
26	24	2406.69	962,899	59	1,119,616	62	4 to 6
25	23	2414.74	966,120	59	1,123,361	63	4 to 6

Continued on the next page.

PLANTING RATES FOR BRUSH-TYPE SEED METERS (HALF RATE DRIVE)
APPROXIMATE SEEDS/ACRE FOR 15" ROW WIDTH

Transmission Sprockets		Population Factor	Rye 400 SDS/REV, 35.9 SDS/GRAM		Wheat 465 SDS/REV, 39.6 SDS/GRAM		Speed Range (MPH)
Drive	Driven		Population (sds/acre)	Population (lbs/acre)	Population (sds/acre)	Population (lbs/acre)	
19	17	2482.92	993,399	61	1,155,079	64	4 to 6
28	25	2488.15	995,490	61	1,157,511	64	4 to 6
27	24	2499.26	999,934	61	1,162,678	65	4 to 6
26	23	2511.33	1,004,765	62	1,168,295	65	4 to 6
17	15	2517.77	1,007,341	62	1,171,291	65	4 to 6
28	24	2591.82	1,036,969	64	1,205,741	67	4 to 6
27	23	2607.92	1,043,409	64	1,213,230	68	4 to 6
23	19	2689.26	1,075,952	66	1,251,069	70	4 to 6
28	23	2704.51	1,082,054	67	1,258,164	70	4 to 6
24	19	2806.18	1,122,733	69	1,305,464	73	4 to 6
19	15	2813.98	1,125,852	69	1,309,090	73	4 to 6
25	19	2923.10	1,169,513	72	1,359,857	76	4 to 6
23	17	3005.64	1,202,535	74	1,398,254	78	4 to 6
26	19	3040.03	1,216,294	75	1,414,252	79	4 to 6
24	17	3136.32	1,254,820	77	1,459,048	81	4 to 6
27	19	3156.95	1,263,075	78	1,468,647	82	4 to 6
25	17	3267.00	1,307,103	80	1,519,841	85	4 to 6
28	19	3273.88	1,309,855	81	1,523,041	85	4 to 6
26	17	3397.68	1,359,388	84	1,580,635	88	4 to 6
23	15	3406.39	1,362,873	84	1,584,687	88	4 to 6
27	17	3528.36	1,411,671	87	1,641,428	91	4 to 6
24	15	3554.50	1,422,128	87	1,653,587	92	4 to 6
28	17	3659.04	1,463,956	90	1,702,222	95	4 to 6
25	15	3702.60	1,481,384	91	1,722,487	96	4 to 6
26	15	3850.70	1,540,639	95	1,791,386	100	4 to 6
27	15	3998.81	1,599,895	98	1,860,286	104	4 to 6
28	15	4146.91	1,659,150	102	1,929,185	107	4 to 6

NOTE: Seed size and type affect the output rate of the meter. For a method to improve the population accuracy with your desired seed, please see the following pages.

NOTE: See “Mechanical Meter General Planting Rate Information” and “Check Seed Population” pages for additional information.

NOTE: When using Half Rate (2 To 1) Drive Reduction Package, rates are approximately 50% of given numbers.

NOTE: Always field check seed population to ensure planting rates are correct.

To more accurately predict population when using the 54 Cell Wheat disc, two things are needed:

1. Seeds/gram
2. Grams/revolution of seed disc

Seeds per gram can be found by weighing a small sample of desired seed (a cup or less) and counting number of seeds in sample.

$$\frac{Seeds}{Grams} = \frac{number\ of\ seeds\ in\ sample}{weight\ of\ sample\ in\ grams} \qquad \frac{396\ Seeds}{10\ Grams} = 39.6\ \frac{seeds}{gram}$$

To find grams/revolution a gram scale, a stopwatch, a small container to catch seed, and a method for spinning the meter at a constant, known rpm (see your local Kinze dealer with a T4000 Seed Meter Test Stand) are needed.

1. Zero gram scale with the small container on it.
2. Load meter with correct disc.
3. Load meter with desired seed.
4. Start spinning meter at a known, constant rpm.
5. Start stopwatch as you place container under meter.
6. Catch seed with container for 10-30 seconds.
7. Stop the stopwatch as you remove container from underneath meter.
8. Weigh container.
9. Enter meter rpm, weight of sample, and duration of sample collection into the equation below:

$$\frac{Grams}{Rev} = \frac{Sample\ Weight * 60}{Disc\ RPM * Sample\ Duration}$$

EX: For a sample taken for 30 seconds with meter spinning at 50rpm and weighs 293 grams

$$\frac{293\ Grams * 60}{50\ RPM * 30\ Seconds} = 11.7\ \frac{Grams}{Rev}$$

10. Find desired output rate. For seeds per acre, use seeds/rev. For pounds per acre, use lbs/rev.

a. Seeds/rev:

$$\frac{Seeds}{Rev} = \frac{Seeds}{Grams} * \frac{Grams}{Rev} \quad \Big| \quad 39.6\ \frac{Seeds}{Grams} * 11.7\ \frac{Grams}{Rev} = 465\ \frac{Seeds}{Rev}$$

b. Lbs./rev:

$$\frac{Pounds}{Rev} = \frac{\frac{Grams}{Rev}}{453.6\ \frac{Grams}{Pound}} \quad \Big| \quad \frac{11.7\ \frac{Grams}{Rev}}{453.6\ \frac{Grams}{Pound}} = 0.0258\ \frac{Pounds}{Rev}$$

11. Find the correct population factor by dividing the desired population by the measured output rate.

Seeds/acre:

$$\frac{\text{Target Population}}{\text{Output Rate}} = \text{Population Factor} \qquad \frac{1{,}000{,}000 \ \frac{\text{Seeds}}{\text{Acre}}}{465 \ \frac{\text{Seeds}}{\text{Rev.}}} = 2150.54$$

pounds/acre:

$$\frac{\text{Target Population}}{\text{Output Rate}} = \text{Population Factor} \qquad \frac{56 \ \frac{\text{lbs}}{\text{Acre}}}{0.0258 \ \frac{\text{lbs}}{\text{rev}}} = 2170.54$$

12. Find the closest Population Factor in the Rate Chart to identify the correct transmission sprockets. For the examples list above, the closest Population Factor is 2142.22 which corresponds to a 27 tooth Drive sprocket and 28 tooth Driven sprocket.

NOTE: Multiple trials are recommended to increase the accuracy of the predicted rate.

PLANTING RATES FOR (VACUUM) WHEAT 54 CELL DISC
(HALF RATE DRIVE [15 TOOTH])
APPROXIMATE SEEDS/ACRE FOR 15" ROW WIDTH

Transmission Sprockets		RPM/GS (Seed Disc RPM To Ground Speed (MPH))	8INH2O, no sigulator		8INH2O, sigulator 3.3		Speed Range (MPH)
Drive	Driven		SDS/REV	Population	SDS/REV	Population	
15	28	2.039	909	744,562	554	453,298	5 to 7
15	27	2.115	903	764,594	551	465,585	5 to 7
15	26	2.196	897	785,948	547	478,707	5 to 7
15	25	2.284	891	808,755	543	492,751	5 to 7
17	28	2.311	888	815,760	542	497,071	5 to 7
15	24	2.379	883	833,164	539	507,816	5 to 7
17	27	2.397	882	837,650	539	510,588	5 to 7
15	23	2.483	876	859,343	535	524,013	5 to 7
17	26	2.489	875	860,943	535	525,004	5 to 7
19	28	2.583	868	884,424	531	539,571	5 to 7
17	25	2.589	868	885,771	530	540,408	5 to 7
19	27	2.679	861	907,980	527	554,221	5 to 7
17	24	2.697	860	912,286	526	556,903	5 to 7
19	26	2.782	854	932,998	522	569,822	5 to 7
17	23	2.814	852	940,653	521	574,605	5 to 7
19	25	2.893	846	959,608	518	586,466	5 to 7
15	19	3.006	838	986,010	513	603,032	5 to 7
19	24	3.014	837	987,957	513	604,256	5 to 7
23	28	3.127	829	1,014,147	508	620,748	5 to 7
19	23	3.145	828	1,018,206	508	623,310	5 to 7
23	27	3.243	821	1,040,464	504	637,378	5 to 7
24	28	3.263	819	1,044,993	503	640,247	5 to 7
15	17	3.359	813	1,066,386	499	653,818	5 to 7
23	26	3.368	812	1,068,291	499	655,029	5 to 7
24	27	3.384	811	1,071,881	498	657,311	5 to 7
25	28	3.399	810	1,075,206	497	659,426	5 to 7
17	19	3.406	809	1,076,779	497	660,427	5 to 7
23	25	3.502	803	1,097,745	493	673,790	5 to 7
24	26	3.514	802	1,100,276	493	675,407	5 to 7
25	27	3.525	801	1,102,616	493	676,902	5 to 7
26	28	3.535	801	1,104,786	492	678,288	5 to 7
23	24	3.648	793	1,128,951	488	693,762	5 to 7
24	25	3.655	792	1,130,291	487	694,622	5 to 7
25	26	3.661	792	1,131,527	487	695,416	5 to 7
26	27	3.666	792	1,132,671	487	696,150	5 to 7
27	28	3.671	791	1,133,732	487	696,831	5 to 7
15	15	3.807	782	1,162,044	482	715,055	5 to 7
28	27	3.948	772	1,190,735	476	733,619	5 to 7
27	26	3.953	772	1,191,825	476	734,326	5 to 7
26	25	3.959	772	1,193,001	476	735,089	5 to 7
25	24	3.966	771	1,194,273	476	735,915	5 to 7
24	23	3.973	771	1,195,655	475	736,812	5 to 7
28	26	4.100	762	1,220,871	471	753,227	5 to 7
27	25	4.112	762	1,223,163	470	754,723	5 to 7
26	24	4.124	761	1,225,641	470	756,341	5 to 7
25	23	4.138	760	1,228,328	469	758,097	5 to 7
19	17	4.255	752	1,250,825	465	772,837	5 to 7
28	25	4.264	752	1,252,531	465	773,957	5 to 7
27	24	4.283	750	1,256,146	464	776,334	5 to 7
26	23	4.304	749	1,260,061	463	778,909	5 to 7
17	15	4.315	748	1,262,143	463	780,280	5 to 7
28	24	4.442	740	1,285,788	458	795,893	5 to 7

Continued on next page.

PLANTING RATES FOR (VACUUM) WHEAT 54 CELL DISC
(HALF RATE DRIVE [15 TOOTH])
APPROXIMATE SEEDS/ACRE FOR 15" ROW WIDTH

Transmission Sprockets		RPM/GS (Seed Disc RPM To Ground Speed (MPH))	8INH2O, no sigulator		8INH2O, sigulator 3.3		Speed Range (MPH)
Drive	Driven		SDS/REV	Population	SDS/REV	Population	
27	23	4.469	738	1,290,855	457	799,250	5 to 7
23	19	4.609	729	1,316,059	452	816,013	5 to 7
28	23	4.635	728	1,320,711	451	819,119	5 to 7
24	19	4.809	717	1,351,123	445	839,524	5 to 7
19	15	4.822	716	1,353,411	445	841,067	5 to 7
25	19	5.009	704	1,384,810	438	862,343	5 to 7
23	17	5.151	695	1,407,761	433	878,034	5 to 7
26	19	5.210	692	1,417,121	431	884,470	5 to 7
24	17	5.375	682	1,442,697	426	902,174	5 to 7
27	19	5.410	680	1,448,057	425	905,906	5 to 7
25	17	5.599	668	1,475,915	419	925,450	5 to 7
28	19	5.610	668	1,477,616	418	926,651	5 to 7
26	17	5.823	655	1,507,414	412	947,862	5 to 7
23	15	5.837	654	1,509,452	411	949,325	5 to 7
27	17	6.046	642	1,537,193	405	969,410	5 to 7
24	15	6.091	640	1,542,943	403	973,616	5 to 7
28	17	6.270	630	1,565,254	398	990,094	5 to 7
25	15	6.345	625	1,574,226	395	996,797	5 to 7
26	15	6.599	611	1,603,300	388	1,018,868	5 to 7
27	15	6.853	598	1,630,167	381	1,039,830	5 to 7
28	15	7.106	584	1,654,826	374	1,059,683	5 to 7

1. Identify planting parameters and record in Table #1.

2. Weigh small sample of seeds and complete Table #2.

3. Use a device to spin the meter at a constant, measured RPM (Seed Meter Test Stand T4000). Set the RPM to settings in the table below (15, 20, 25, 30) and collect a sample of seed coming out of the meter. It is recommended to start with a Vacuum pressure of 8INH2O and removing the singulator. Increasing the vacuum pressure will increase the SDS/REV while using the singulator will decrease the SDS/REV. Weigh the sample of seed and record the length of time the sample was collected in Table #3.

4. Complete Table #3 for each RPM setting using information from Tables 1 and 2. Variables with the subscript "$_{RPM}$" uses the values in the same row in Table #3.

5. Choose the 2 closest populations to your desired target population and add them to Table #4 with their respective seeds per rev.

6. Complete Table #4 and calculate the approximate seeds per rev.

7. Calculate Seed Disc RPM/Ground Speed Ratio in Table #5.

8. Select the closest RPM/GS (Seed Disc RPM to Ground Speed (mph)) in the rate chart and use that Drive and Driven pair.

Table #1		Table #2	
Target Population [seeds/acre] **(Pop_{TAR})**		Number of Seeds **(N)**	
Ideal Planting Ground Speed [mph] **(GS)**		Weight of sample [grams] **(W)**	
Planter Row Spacing [in] **(RS)**		Seeds/ Gram = **N/W (SG)**	

Table #3

			$SR_{RPM} = \frac{W_{RPM}}{t_{RPM}} \times \left(\frac{60}{RPM}\right) \times SG$		$Pop_{RPM} = \frac{SR_{RPM} \times RPM \times 5940}{GS \times RS}$
Vacuum Pressure	Disc RPM	Weight [grams] **(W_{RPM})**	Time [sec.] **(t_{RPM})**	Seeds/ Rev **(SR_{RPM})**	Population **(Pop_{RPM})**
	15				
Sing. Setting	20				
	25				
	30				

Table #4

Pop_1		Pop_2		Pop_{TAR}	
SR_1		SR_2			
$SR_{TAR} = \left(\frac{SR_2 - SR_1}{Pop_2 - Pop_1}\right) \times (Pop_{TAR} - Pop_1) + SR_1$					

Table #5

GS		$RPM_{TAR} = \frac{Pop_{TAR} \times GS \times RS}{RS \times SR_{TAR}}$	
RS			
Pop_{TAR}			
SR_{TAR}		$\frac{RPM_{Tar}}{GS}$	

NOTE: Additional worksheets can be found **"Additional Worksheet" on page 5-11**

Example.

Table #1		Table #2	
Target Population [seeds/acre] **(Pop_{TAR})**	1,200,000	Number of Seeds **(N)**	259
Ideal Planting Ground Speed [mph] **(GS)**	6mph	Weight of sample [grams] **(W)**	10.01
Planter Row Spacing [in] **(RS)**	15 in.	Seeds/ Gram = **N/W (SG)**	25.88

Table #3

			$SR_{RPM} = \frac{W_{RPM}}{t_{RPM}} \times \left(\frac{60}{RPM}\right) \times SG$		$Pop_{RPM} = \frac{SR_{RPM} \times RPM \times 5940}{GS \times RS}$
Vacuum Pressure	Disc RPM	Weight [grams] **(W_{RPM})**	Time [sec.] **(t_{RPM})**	Seeds/ Rev **(SR_{RPM})**	Population **(Pop_{RPM})**
8	15	$\frac{765}{90.43} \times \left(\frac{60}{15}\right) \times 25.88 = 875.7$			$\frac{875.7 \times 15 \times 5940}{6 \times 15} = 866{,}943$
		765	90.43	875.7	866,943
	20	$\frac{640}{60.55} \times \left(\frac{60}{20}\right) \times 25.88 = 820.6$			$\frac{820.6 \times 20 \times 5940}{6 \times 15} = 1{,}083{,}192$
Sing. Setting		640	60.55	820.6	1,083,192
	25	$\frac{1101}{90.1} \times \left(\frac{60}{25}\right) \times 25.88 = 759$			$\frac{759 \times 25 \times 5940}{6 \times 15} = 1{,}252{,}350$
		1101	90.1	759	1,252,350
removed	30	$\frac{840}{60.58} \times \left(\frac{60}{30}\right) \times 25.88 = 717.7$			$\frac{717.7 \times 30 \times 5940}{6 \times 15} = 1{,}252{,}350$
		840	60.58	717.7	1,421,046

Table #4

Pop_1	1,083,192	Pop_2	1,252,350	Pop_{TAR}	1,200,000
SR_1	820.6	SR_2	756		
$SR_{TAR} = \left(\frac{SR_2 - SR_1}{Pop_2 - Pop_1}\right) \times (Pop_{TAR} - Pop_1) + SR_1$					776.0
$\left(\frac{756 - 820.6}{1{,}252{,}350 - 1{,}083{,}192}\right) \times (1{,}200{,}000 - 1{,}083{,}192) + 820.6 = 776.0$					

Table #5

GS	6mph	$RPM_{TAR} = \frac{Pop_{TAR} \times GS \times RS}{5940 \times SR_{TAR}}$	23.4
RS	15 in		
Pop_{TAR}	1,200,000		
SR_{TAR}	776.0	$\frac{1{,}200{,}000 \times 6 \times 15}{5940 \times 776} = 23.4$	
		$\frac{RPM_{Tar}}{GS} = \frac{23.4}{6} = 3.905$	3.905

Additional Worksheet

Table #1		Table #2	
Target Population [seeds/acre] **(Pop_{TAR})**		Number of Seeds **(N)**	
Ideal Planting Ground Speed [mph] **(GS)**		Weight of sample [grams] **(W)**	
Planter Row Spacing [in] **(RS)**		Seeds/ Gram = **N/W (SG)**	

Table #3

			$SR_{RPM} = \frac{W_{RPM}}{t_{RPM}} \times \left(\frac{60}{RPM}\right) \times SG$		$Pop_{RPM} = \frac{SR_{RPM} \times RPM \times 5940}{GS \times RS}$
Vacuum Pressure	Disc RPM	Weight [grams] **(W_{RPM})**	Time [sec.] **(t_{RPM})**	Seeds/ Rev **(SR_{RPM})**	Population **(Pop_{RPM})**
	15				
Sing. Setting	20				
	25				
	30				

Table #4

Pop_1		Pop_2		Pop_{TAR}	
SR_1		SR_2			

$$SR_{TAR} = \left(\frac{SR_2 - SR_1}{Pop_2 - Pop_1}\right) \times (Pop_{TAR} - Pop_1) + SR_1$$

Table #5

GS		$RPM_{TAR} = \frac{Pop_{TAR} \times GS \times RS}{RS \times SR_{TAR}}$	
RS			
Pop_{TAR}			
SR_{TAR}		$\frac{RPM_{Tar}}{GS}$	

LIQUID FERTILIZER PISTON PUMP APPLICATION RATES
GALLONS PER ACRE

Model NGP-6055 Pumps With 18 Tooth Contact Wheel Drive Sprocket
(Planter equipped with two piston pumps.)

Pump Setting	2	3	4	5	6	7	8	9	10
24 Row 30"	9.2	13.6	18.2	22.8	27.4	32.0	36.6	41.2	45.6

Model NGP-7055 Pumps With 18 Tooth Sprocket and Ground Drive
(Planter equipped with two piston pumps.)

Pump Setting	2	3	4	5	6	7	8	9	10
24 Row 30"	7.4	11.1	14.8	18.5	22.1	25.8	29.5	33.2	36.9

Charts are for planters equipped with contact drive. Check tires for correct operating pressure.

Charts calculated based on a solution weighing ten pounds per gallon.

NOTE: Fertilizer application rates can vary from weights calculated in above chart. Make field checks to be sure you are applying fertilizer at desired rate.

To check the exact number of gallons your fertilizer attachment will actually deliver on a 30" row spacing:

1. Remove hose from one fertilizer opener and insert it into a collection container secured planter frame.
2. Engage fertilizer attachment and drive forward for 174'.
3. Measure fluid ounces caught in container and multiply by 100. Divide that amount by 128. Result is gallons fertilizer delivered per acre when planting in 30" rows. To convert this delivery rate for other row widths, multiply by the following conversion factors:

   20" x 1.50 22" x 1.36 38" x 0.79

4. Rinse collection container and repeat test on other rows if necessary.

HIGH-RATE LIQUID FERTILIZER PISTON PUMP APPLICATION RATES GALLONS PER ACRE

Model NGP-6055 Piston Pump (Using Flow Dividers) With 18 Tooth Sprocket (Planter Equipped With Two Piston Pumps)

Below charts for planters equipped with 37" drive wheel and 15" contact wheel, based on 47.125" forward travel per contact wheel revolution, 48 tooth drive sprocket, and 18 tooth driven sprocket on metering pump. Chart is based on average wheel slippage and liquid viscosities.

Chart calculated based on a solution weighing ten pounds per gallon.

NOTE: Fertilizer application rates can vary from weights calculated in chart. Make field checks to be sure you are applying fertilizer at desired rate.

NOTE: Periodically check flow rates to all rows. Set flow rate is still delivered to remaining rows even if lines are plugged.

24 Row 20"	
Pump Setting	**Gal./Acre**
10	31.0
9.75	30.3
9.5	29.5
9.25	28.7
9	27.9
8.75	27.1
8.5	26.4
8.25	25.6
8	24.8
7.75	24.0
7.5	23.3
7.25	22.5
7	21.7
6.75	20.9
6.5	20.2
6.25	19.4
6	18.6
5.75	17.8
5.5	17.1
5.25	16.3
5	15.5
4.75	14.7
4.5	14.0
4.25	13.2
4	12.4
3.75	11.6
3.5	10.9
3.25	10.1
3	9.3
2.75	8.5
2.5	7.7
2.25	7.0
2	6.2

24 Row 22"	
Pump Setting	**Gal./Acre**
10	28.2
9.75	27.5
9.5	26.8
9.25	26.1
9	25.4
8.75	24.7
8.5	24.0
8.25	23.3
8	22.6
7.75	21.9
7.5	21.2
7.25	20.4
7	19.7
6.75	19.0
6.5	18.3
6.25	17.6
6	16.9
5.75	16.2
5.5	15.5
5.25	14.8
5	14.1
4.75	13.4
4.5	12.7
4.25	12.0
4	11.3
3.75	10.6
3.5	9.9
3.25	9.2
3	8.5
2.75	7.8
2.5	7.0
2.25	6.3
2	5.6

To check exact number of gallons your fertilizer attachment will actually deliver on a 20" or 22" row spacing:

1. Remove hose from one fertilizer opener and insert it into a collection container secured planter frame.
2. Engage fertilizer attachment and drive forward for 170'.
3. Measure fluid ounces caught in container and multiply by 24. Divide that amount by the row spacing in inches. Result is gallons of fertilizer delivered per acre.
4. Rinse collection container and repeat test on other rows if necessary.

LOW-RATE (POP-UP) LIQUID FERTILIZER PISTON PUMP APPLICATION RATES GALLONS PER ACRE

Model NGP-6055 Piston Pump (Using Orifices) With 18 Tooth Sprocket (Planter Equipped With One Piston Pump)

Below charts for planters equipped with 37" drive wheel and 15" contact wheel, based on 47.125" forward travel per contact wheel revolution, 23 tooth drive sprocket, and 18 tooth driven sprocket on metering pump. Chart is based on average wheel slippage and liquid viscosities.

Chart calculated based on a solution weighing ten pounds per gallon.

NOTE: Fertilizer application rates can vary from weights calculated in chart. Make field checks to be sure you are applying fertilizer at desired rate.

NOTE: Periodically check flow rates to all rows. Set flow rate is still delivered to remaining rows even if lines are plugged.

24 Row 20"	
Pump Setting	**Gal./Acre**
6.5	10.1
6.3	9.7
6.0	9.3
5.8	8.9
5.5	8.5
5.3	8.1
5	7.8
4.75	7.4
4.5	7.0
4.25	6.6
4	6.2
3.75	5.8
3.5	5.4
3.25	5.0
3	4.7
2.75	4.3
2.5	3.9
2.25	3.5
2	3.1

24 Row 22"	
Pump Setting	**Gal./Acre**
6.5	9.2
6.25	8.8
6	8.5
5.75	8.1
5.5	7.8
5.25	7.4
5	7.0
4.75	6.7
4.5	6.3
4.25	6.0
4	5.6
3.75	5.3
3.5	4.9
3.25	4.6
3	4.2
2.75	3.9
2.5	3.5
2.25	3.2
2	2.8

Orifice Sizing Chart		
Speed	**Orifice Size**	**P/N**
2-4 mph	0.02	GA17118
4-8mph	0.025	GA17119

To check exact number of gallons your fertilizer attachment will actually deliver on a 20" or 22" row spacing:

1. Remove hose from one fertilizer opener and insert it into a collection container secured planter frame.
2. Engage fertilizer attachment and drive forward for 170'.
3. Measure fluid ounces caught in container and multiply by 24. Divide that amount by the row spacing in inches. Result is gallons of fertilizer delivered per acre.
4. Rinse collection container and repeat test on other rows if necessary.

DRY INSECTICIDE APPLICATION RATES
APPROXIMATE POUNDS/ACRE AT 5 MPH (8 KPH)

Meter Setting	20" Rows	22" Rows	30" Rows
CLAY GRANULES			
10	7.4	6.7	4.9
11	8.1	7.3	5.4
12	9.2	8.3	6.1
13	10.4	9.4	6.9
14	11.6	10.5	7.7
15	12.8	11.6	8.5
16	14.4	13.1	9.6
17	16.1	14.6	10.7
18	17.1	15.5	11.4
19	19.7	17.8	13.1
20	21.3	19.3	14.2
21	23.3	21.1	15.5
22	24.6	22.3	16.4
23	25.8	23.4	17.2
24	28.2	25.6	18.8
25	31.4	28.4	20.9
26	34.5	31.3	23.0
27	36.2	32.8	24.1
28	38.1	34.5	25.4
29	41.7	37.8	27.8
30	44.4	40.3	29.6
SAND GRANULES			
5	4.4	3.9	2.9
6	7.4	6.7	4.9
7	8.0	7.2	5.3
8	9.5	8.6	6.3
9	11.7	10.6	7.8
10	13.4	12.1	8.9
11	15.3	13.9	10.2
12	16.8	15.2	11.2
13	18.9	17.1	12.6
14	21.2	19.2	14.1
15	23.3	21.1	15.5
16	26.3	23.8	17.5
17	29.1	26.4	19.4
18	32.7	29.7	21.8
19	36.5	33.1	24.3
20	38.6	35.0	25.7
21	41.4	37.5	27.6
22	44.4	40.3	29.6
23	48.0	43.5	32.0
24	51.6	46.8	34.4
25	55.4	50.2	36.9

NOTE: Chart represents average values and should be used only as a starting point. Granular chemical flows through meter opening at a nearly uniform rate regardless of roller speed. Your actual rate will vary depending on insecticide, planting speed, and plant population. Planting speed/ground speed has the greatest effect on application rate.

Field check your actual rate with insecticide you are using at speed and population you will be planting. See “Checking Granular Chemical Application Rate” in Machine Operation section for more information..

DRY HERBICIDE APPLICATION RATES
APPROXIMATE POUNDS/ACRE AT 5 MPH (8 KPH)

CLAY GRANULES

Meter Setting	20" Rows	22" Rows	30" Rows
10	7.1	6.4	4.7
11	7.8	7.1	5.2
12	8.7	7.9	5.8
13	9.8	8.8	6.5
14	11.0	9.9	7.3
15	12.3	11.2	8.2
16	13.5	12.2	9.0
17	14.9	13.5	9.9
18	16.1	14.6	10.7
19	17.4	15.8	11.6
20	18.9	17.1	12.6
21	20.4	18.5	13.6
22	21.9	19.9	14.6
23	23.6	21.4	15.7
24	25.5	23.1	17.0
25	27.2	24.6	18.1
26	29.1	26.4	19.4
27	31.4	28.4	20.9
28	33.9	30.7	22.6
29	36.5	33.1	24.3
30	40.1	36.3	26.7

NOTE: Chart represents average values and should be used only as a starting point. Granular chemical flows through given meter opening at a nearly uniform rate regardless of roller speed. Your actual rate will vary depending on specific herbicide, planting speed, and plant population. Planting speed/ground speed has the greatest effect on application rate.

Field check your actual rate with herbicide you are using at speed and population you will be planting. See “Checking Granular Chemical Application Rate” in Machine Operation section for more information.

LUBRICATION

Following pages show locations of all lubrication points. Proper lubrication of moving parts helps ensure efficient operation of your Kinze planter and prolongs the life of friction producing parts.

LUBRICATION SYMBOLS

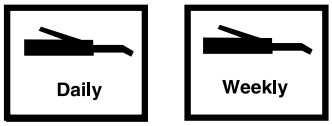

Lubricate at frequency indicated with SAE multipurpose grease.

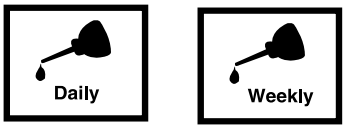

Lubricate at frequency indicated with high quality SAE 10 weight oil or spray lubricant.

SEALED BEARINGS

Sealed bearings are used on your Kinze planter to provide trouble free operation.

These are located on drive shafts, row units, and transmission bearings. Sealed bearings are lubricated for life and are not serviceable.

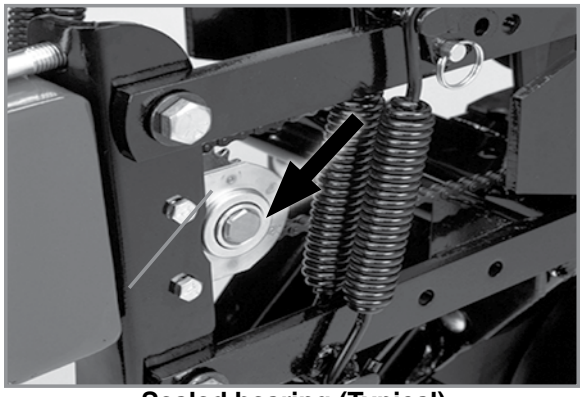

Sealed bearing (Typical)

WHEEL BEARINGS

All drive, transport, and marker hub wheel bearings should be repacked annually and checked for wear.

1. Raise wheel off ground.
2. Check for bearing endplay by moving wheel side to side.
3. Rotate wheel to check for bearing roughness. If bearings sound rough, remove hub and inspect bearings.

NOTE: To repack wheel hubs, follow procedure outlined for wheel bearing replacement in this section except bearings and bearing cups are reused.

DRIVE CHAINS

Lubricate all transmission and drive chains daily with a high quality chain lubricant. Extreme operating conditions such as dirt, temperature, or speed may require more frequent lubrication.

If a chain becomes stiff, it should be removed, soaked, and washed in solvent to loosen and remove dirt from joints. Soak chain in oil so lubricant can penetrate between rollers and bushings.

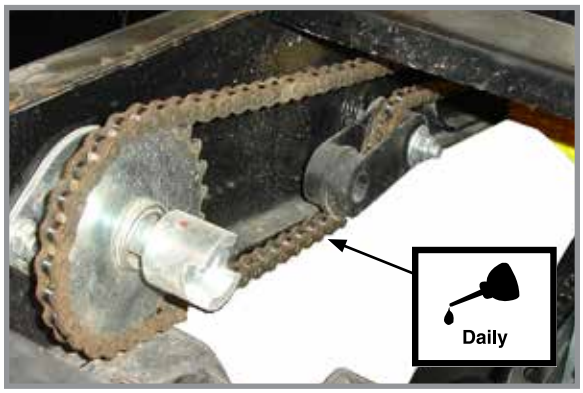

Row unit granular chemical drive chains

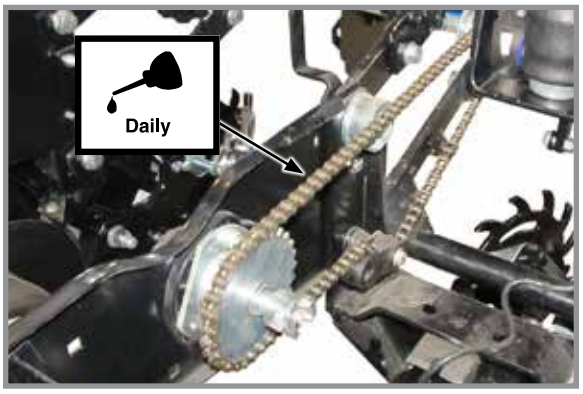

Row unit drive chains

Contact wheel drive chains

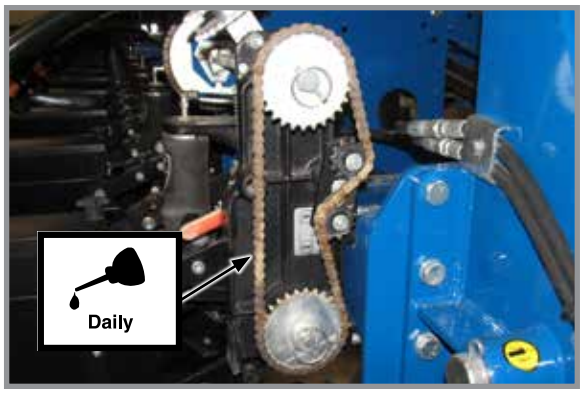

Transmission chains

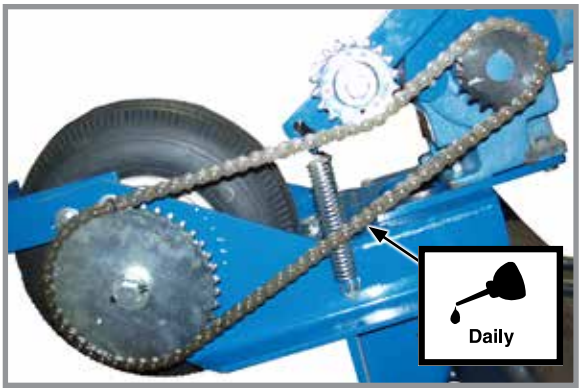

Optional piston pump drive chain

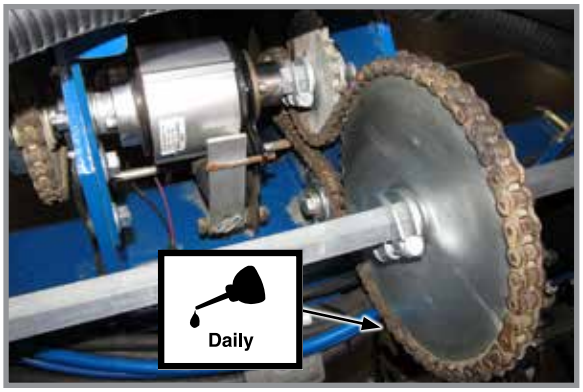

Inner module (point row clutch) drive chains

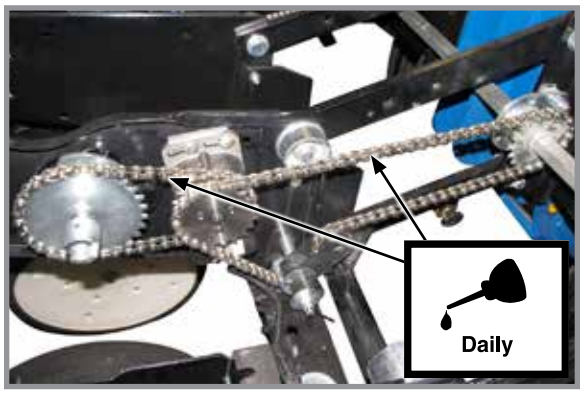

Row Unit Electric Clutches

BUSHINGS

Lubricate bushings at frequency indicated.

Check each bolt for proper torque. If bolt is loose, removed it and inspect bushing for cracks and wear. Replace bushing if necessary. Use **only hardened flat washers. Replace damaged flat washers with proper part. Torque hardware to 130 ft-lb (176.2 N-m).**

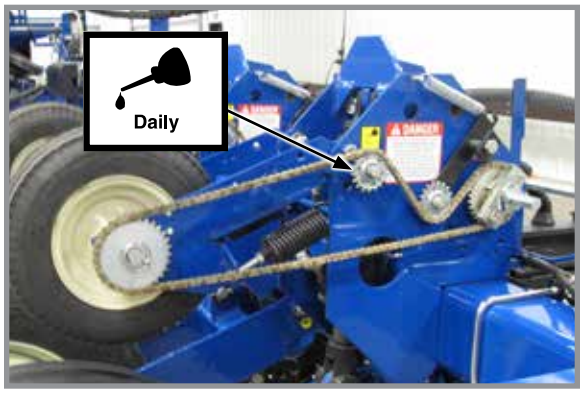

Contact wheel arm (2 per assembly)

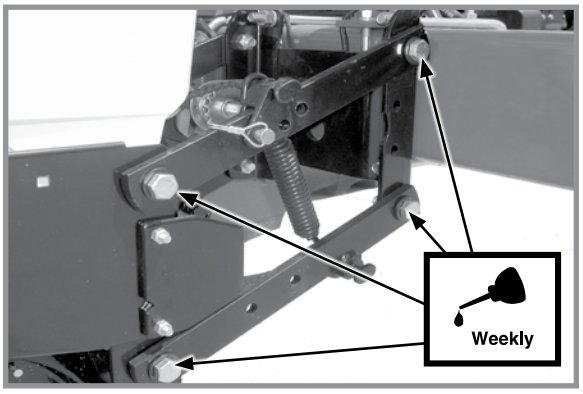

Row unit parallel linkages (8 per row)

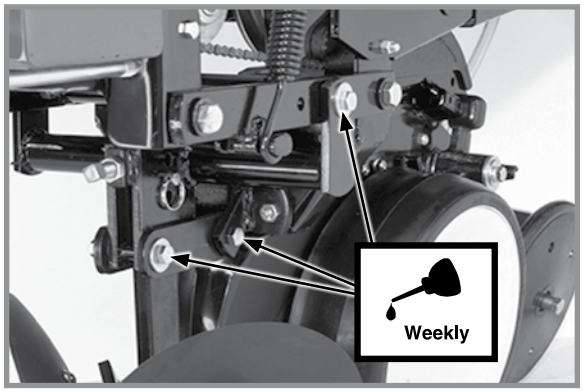

Row unit mounted disc furrower parallel linkages (6 per row)

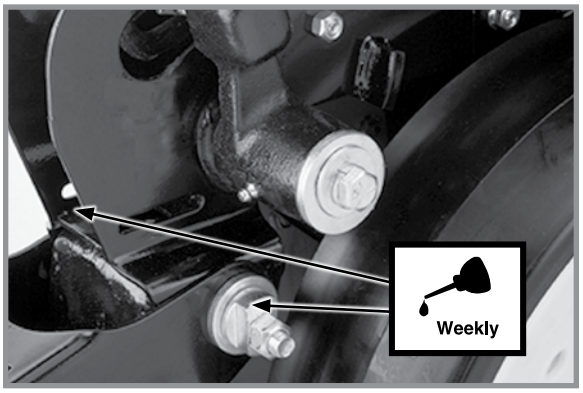

Row unit "v"closing wheel, covering discs/ single press wheel and/or drag closing wheel eccentric bushings (2 per row)

SLIDING HITCH LINKAGE

Inspect linkage daily to ensure free movement of axle links in slides.

Keep axle link slides clean. DO NOT GREASE the axle link slides. Powdered graphite may be used if lubrication is desired.

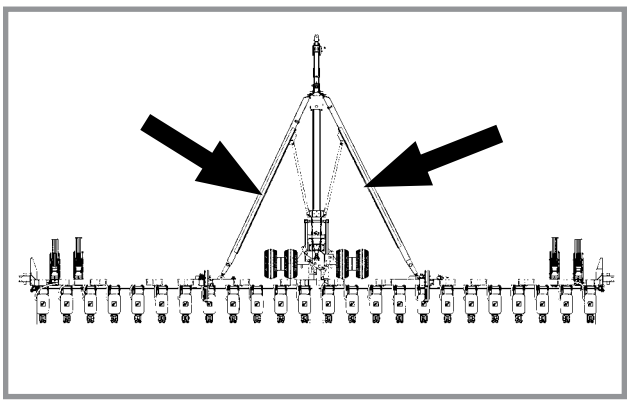

PTO SHAFT COUPLING

Clean and grease PTO shaft coupling each time pump is installed.

Apply coating of high-speed industrial coupling grease, such as Chevron® Coupling Grease meeting AGMA CG-1 and CG-2 Standards to extend shaft spline life.

PTO pump installed

WRAP SPRING WRENCH ASSEMBLY

Wrap spring wrench components may require occasional lubrication to operate correctly using a high quality spray lubricant.

Operate wrap spring wrench when lubricating so lubricant can be absorbed into wrap spring area.

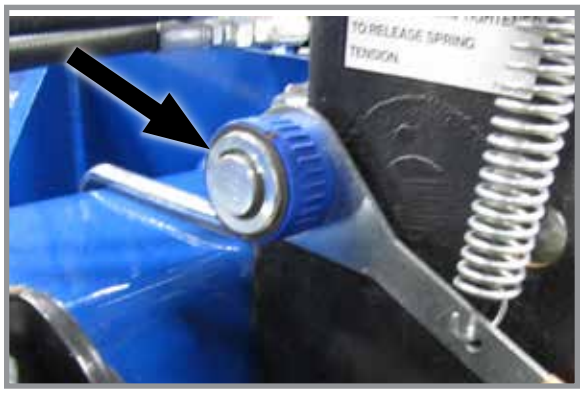

Wrap spring wrench lubrication

LIQUID FERTILIZER PISTON PUMP CRANKCASE OIL LEVEL

Check crankcase oil daily and maintain at oil level check plug. Fill as needed with EP 90 weight gear oil. Total oil capacity is approximately ¾ pint.

Refer to operator and instruction manual supplied with pump and flow divider for more information.

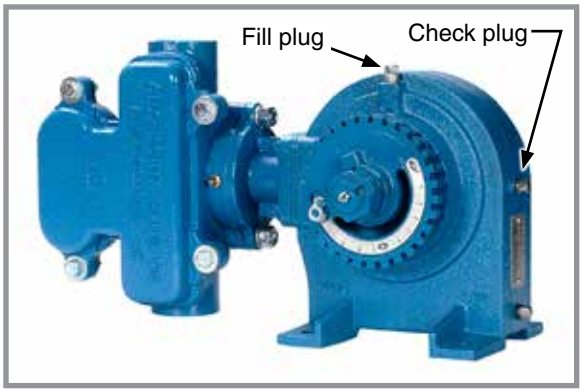

Piston pump oil fill and check plug locations

GREASE FITTINGS

Uncontrolled movement of equipment can cause loss of control and could result in death, serious injury, or damage to property and equipment. Install all safety lockup devices before transporting equipment.

Parts equipped with grease fittings should be lubricated at frequency indicated with an SAE multipurpose grease. Clean fitting thoroughly before using grease gun. Frequency of lubrication recommended is based on normal operating conditions. Severe or unusual conditions may require more frequent attention.

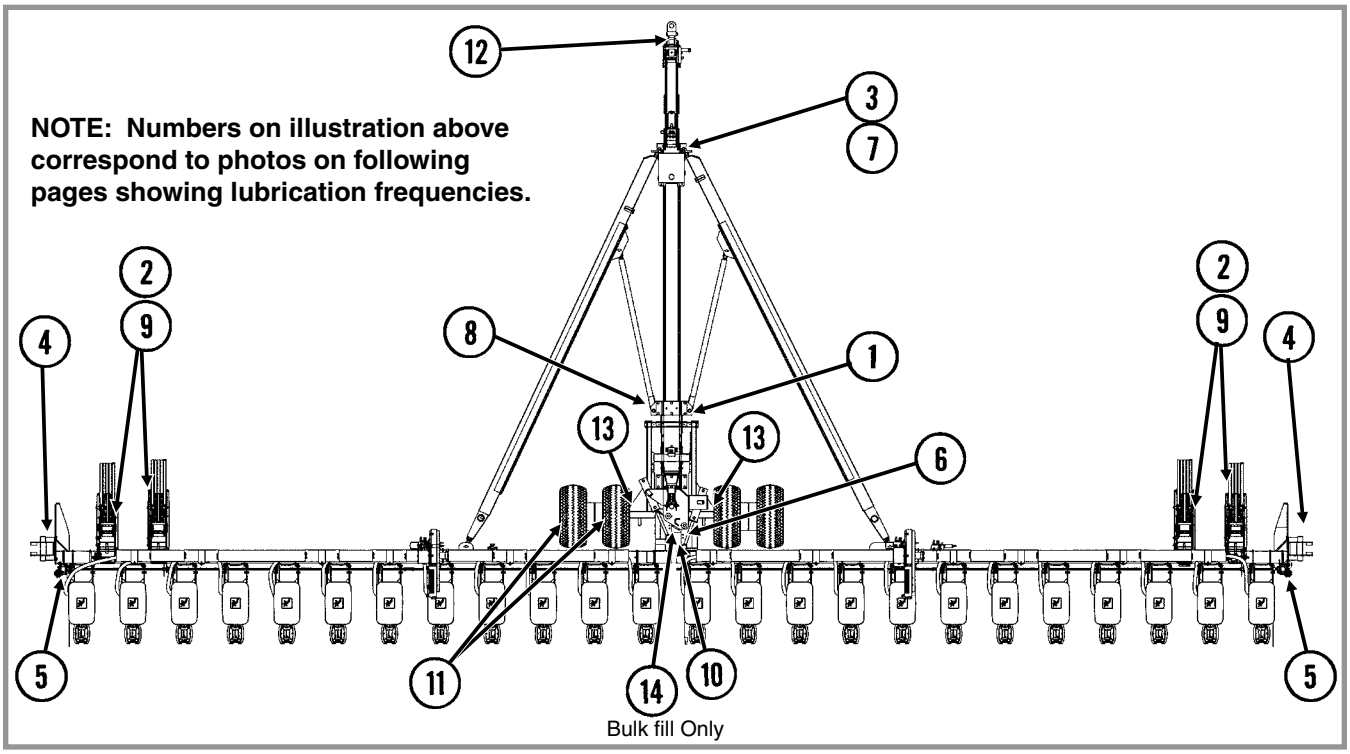

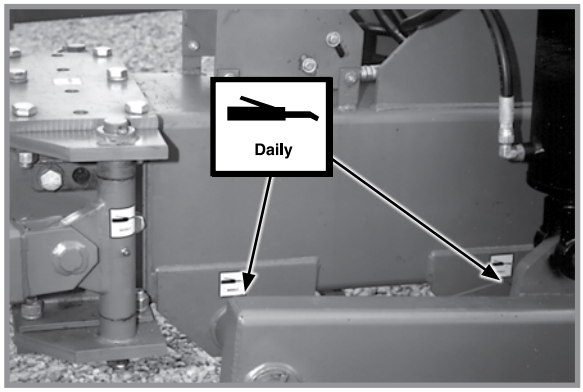

1. Axle and automatic safety lock pivots (7)

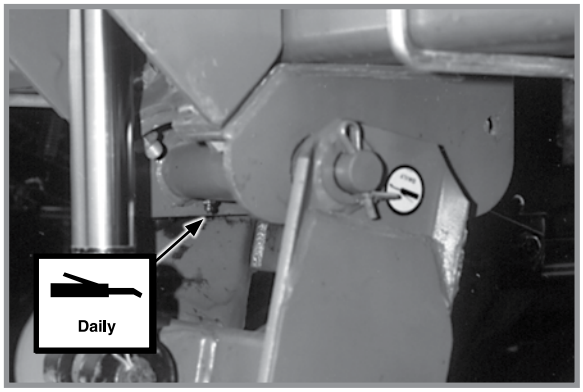

2. Ground drive wheel pivot (2 per wheel module)

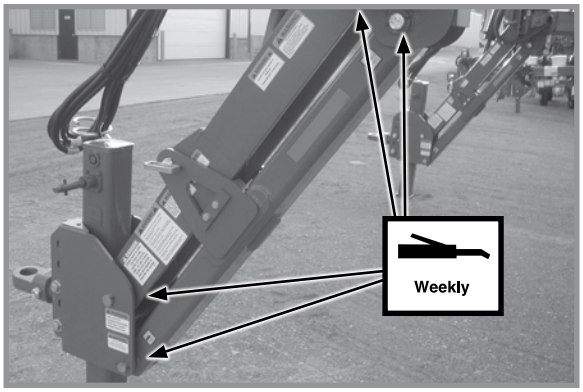

3. Upper and lower hitch linkage (2 per link)

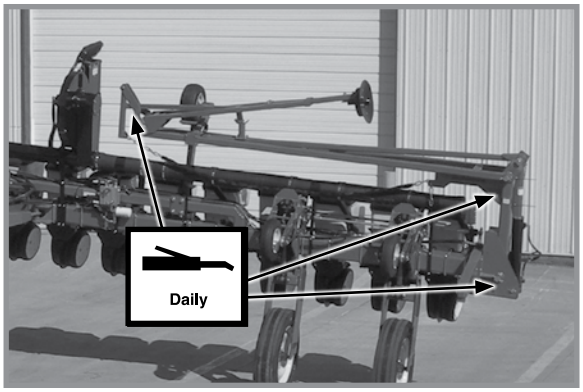

4. Row Marker Assemblies (11 per side)
(General locations shown)

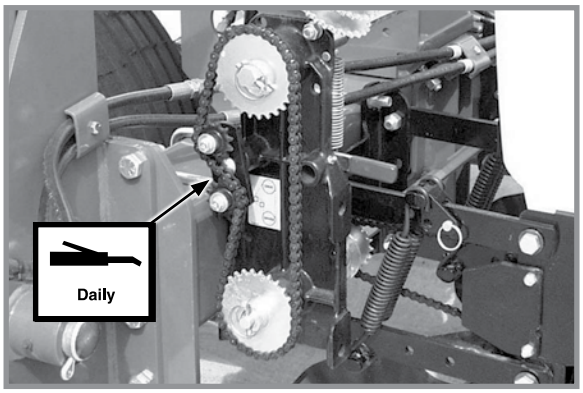

5. Seed rate transmission assembly idler pivot
(1 per assembly)

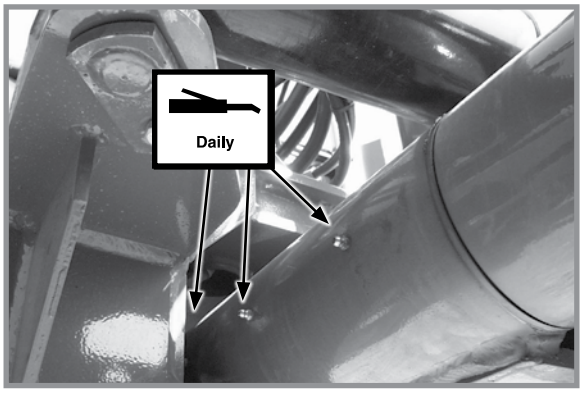

6. Wing pivot knuckle
(3 per knuckle on horizontal shaft)

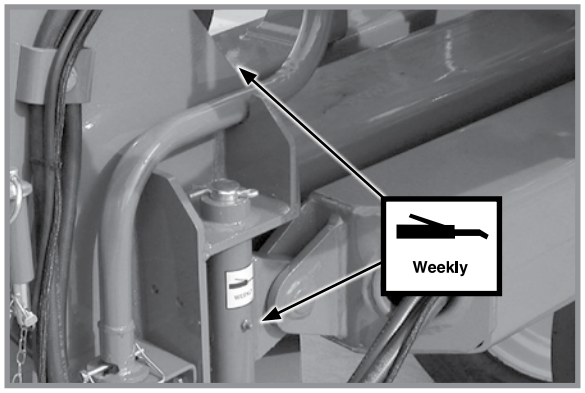

7. Link assemblies (1 per assembly)
Front wear pads (4)

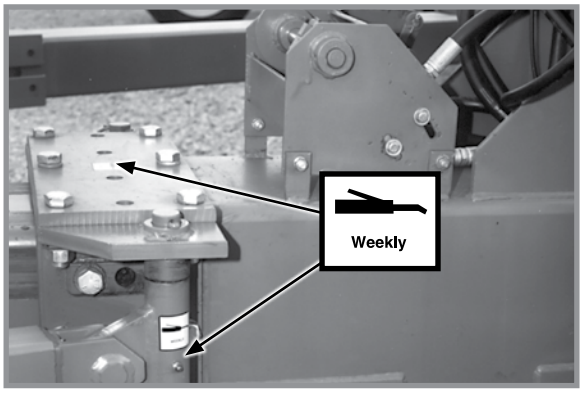

8. Axle link assemblies (1 per assembly)
Rear wear pads (2 sets - 16)

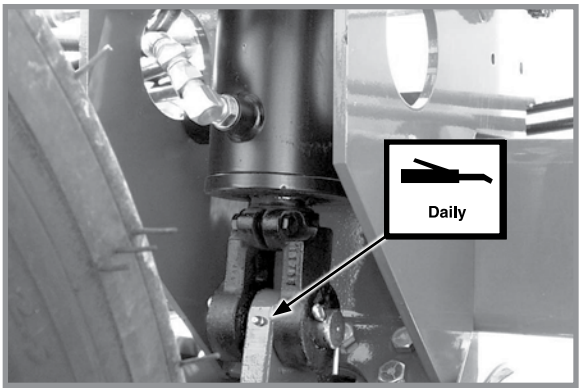

9. Wheel module lift cylinder mount (1 per wheel module)

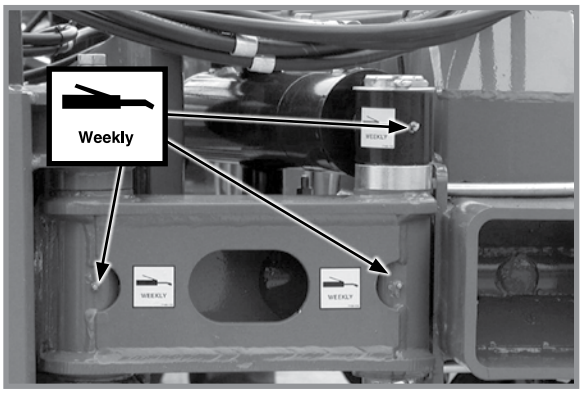

10. Wing pivot knuckle - 1 per knuckle on shaft Helper cylinders (1 per cylinder)

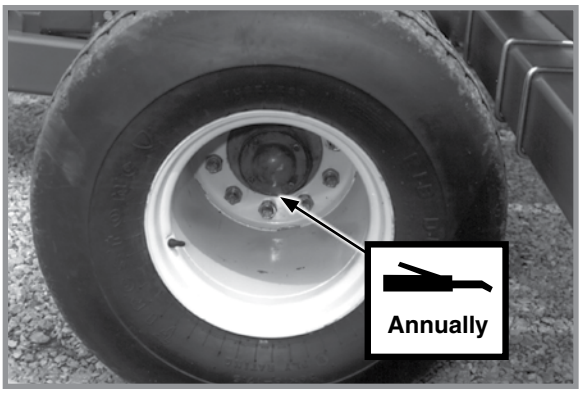

11. Transport wheel bearing (1 per wheel hub)

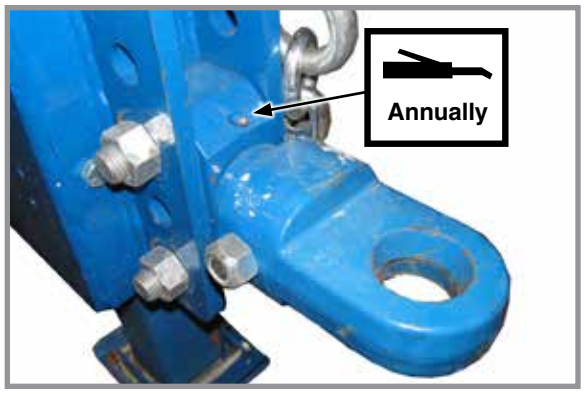

12. Swivel block (1)

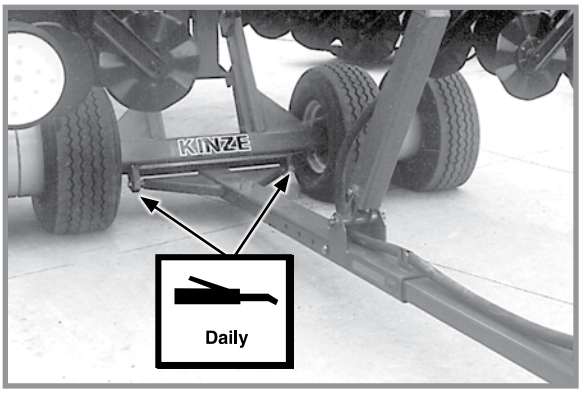

13. Rear trailer hitch pivot (2)

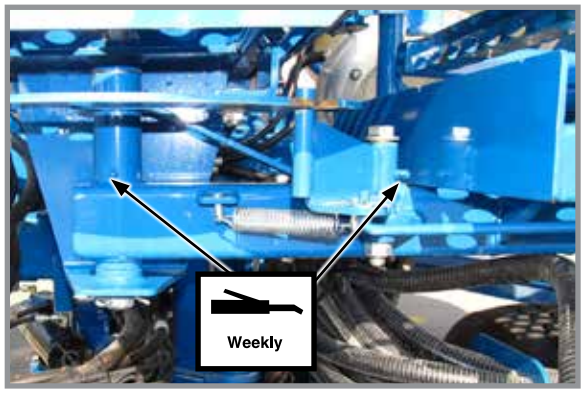

14. 36 Row bulk fill catwalk extension pivots (2)

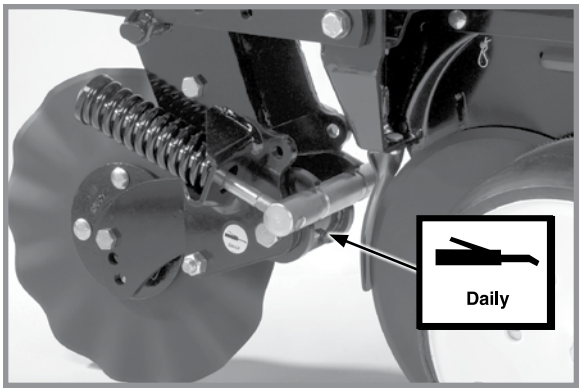

Frame Mounted Coulter (1 per arm)

Notched single disc opener (1 per arm)

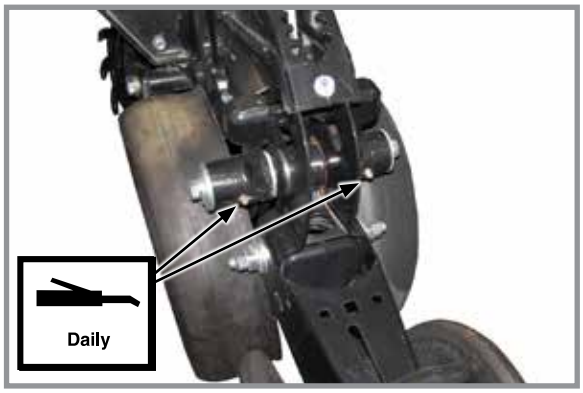

Gauge wheel arms (2)

Seals in gauge wheel arm are installed with lip facing out to allow grease to purge dirt away from seal. Pump grease into arm until fresh grease appears between washers and arm.

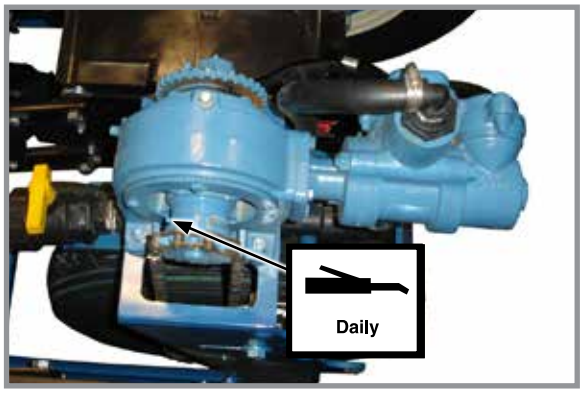

Piston pump L.H. side (1)

Fill until grease seeps out of bottom drain hole.

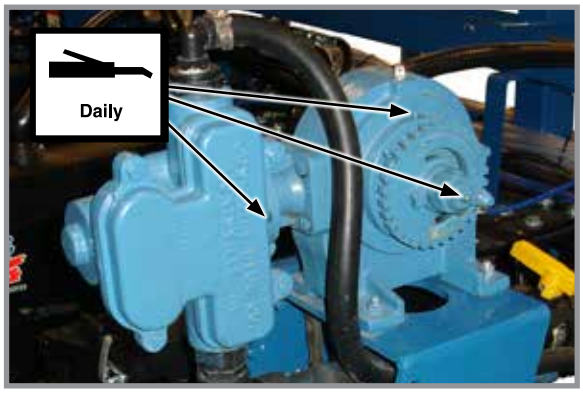

Piston pump R.H. side (3)

MOUNTING BOLTS AND HARDWARE

Before operating planter for the first time, check all hardware is tight. Check all hardware again after first 50 hours of operation and beginning of each planting season.

All hardware used on the Kinze planter is Grade 5 (high strength) unless otherwise noted. Grade 5 cap screws are marked with three radial lines on the head. Hardware must be replaced with equal size, strength, and thread type.

WARNING

Loose transport wheel lug bolts can result in wheel separation from planter and result in death, serious injury, and damage to property and equipment. Check transport wheel lug nut torque before operating planter for the first time and periodically thereafter.

NOTICE

Over-tightening hardware can reduce its shock load capacity and cause equipment failure.

TORQUE VALUES CHART - PLATED HARDWARE

	Grade 2 (No marks)		Grade 5 (3 marks)		Grade 8 (6 marks)	
Diameter	Coarse	Fine	Coarse	Fine	Coarse	Fine
¼"	50 in-lb	56 in-lb	76 in-lb	87 in-lb	9 ft-lb (12 N-m)	10 ft-lb (14 N-m)
5⁄16"	8 ft-lb (11 N-m)	9 ft-lb (12 N-m)	13 ft-lb (18 N-m)	14 ft-lb (19 N-m)	18 ft-lb (24 N-m)	20 ft-lb (27 N-m)
⅜"	15 ft-lb (20 N-m)	17 ft-lb (23 N-m)	23 ft-lb (31 N-m)	26 ft-lb (35 N-m)	33 ft-lb (45 N-m)	37 ft-lb (50 N-m)
7⁄16"	25 ft-lb (34 N-m)	27 ft-lb (37 N-m)	37 ft-lb (50 N-m)	41 ft-lb (56 N-m)	52 ft-lb (71 N-m)	58 ft-lb (79 N-m)
½"	35 ft-lb (48 N-m)	40 ft-lb (54 N-m)	57 ft-lb (77 N-m)	64 ft-lb (87 N-m)	80 ft-lb (108 N-m)	90 ft-lb (122 N-m)
9⁄16"	50 ft-lb (68 N-m)	60 ft-lb (81 N-m)	80 ft-lb (108 N-m)	90 ft-lb (122 N-m)	115 ft-lb (156 N-m)	130 ft-lb (176 N-m)
⅝"	70 ft-lb (95 N-m)	80 ft-lb (108 N-m)	110 ft-lb (149 N-m)	125 ft-lb (169 N-m)	160 ft-lb (217 N-m)	180 ft-lb (244 N-m)
¾"	130 ft-lb (176 N-m)	145 ft-lb (197 N-m)	200 ft-lb (271 N-m)	220 ft-lb (298 N-m)	280 ft-lb (380 N-m)	315 ft-lb (427 N-m)
⅞"	125 ft-lb (169 N-m)	140 ft-lb (190 N-m)	320 ft-lb (434 N-m)	350 ft-lb (475 N-m)	450 ft-lb (610 N-m)	500 ft-lb (678 N-m)
1"	190 ft-lb (258 N-m)	205 ft-lb (278 N-m)	480 ft-lb (651 N-m)	530 ft-lb (719 N-m)	675 ft-lb (915 N-m)	750 ft-lb (1017 N-m)
1⅛"	265 ft-lb (359 N-m)	300 ft-lb (407 N-m)	600 ft-lb (814 N-m)	670 ft-lb (908 N-m)	960 ft-lb (1302 N-m)	1075 ft-lb (1458 N-m)
1¼"	375 ft-lb (508 N-m)	415 ft-lb (563 N-m)	840 ft-lb (1139 N-m)	930 ft-lb (1261 N-m)	1360 ft-lb (1844 N-m)	1500 ft-lb (2034 N-m)
1⅜"	490 ft-lb (664 N-m)	560 ft-lb (759 N-m)	1100 ft-lb (1491 N-m)	1250 ft-lb (1695 N-m)	1780 ft-lb (2413 N-m)	2030 ft-lb (2752 N-m)
1½"	650 ft-lb (881 N-m)	730 ft-lb (990 N-m)	1450 ft-lb (1966 N-m)	1650 ft-lb (2237 N-m)	2307 ft-lb (3128 N-m)	2670 ft-lb (3620 N-m)

TORQUE VALUES - PNEUMATIC DOWN PRESSURE

Diameter	Torque Value
⅛" NPT	120 in-lb Maximum
½"-13	180 in-lb Maximum
¾"-16	180 in-lb Maximum

NOTE: Use these torque values with pneumatic down pressure components.

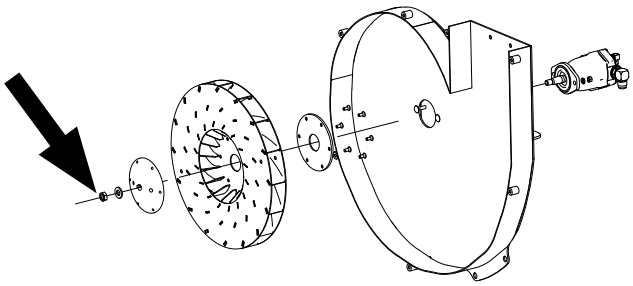

NOTE: Torque vacuum fan impeller assembly to motor shaft ⅝"-18 hex jam nut 50 ft-lb (67.8 N-m).

SPECIAL TORQUE VALUES & INSTRUCTIONS

Row unit parallel linkage bushing hardware	130 ft-lb (176 Nm)
⅝" No till coulter spindle hardware	120 ft-lb (162 Nm)
Transport Tire Inner Budd Nuts**	315 ft-lb (427 Nm)
Transport Tire Outer Budd Nuts**	1075 ft-lb (1458 Nm)

****NOTE: Loosen outer budd nut first, then loosen inner budd nut.**

CYLINDER ROD PISTON RETAINING NUT TORQUE CHART

	Non-Nylock Nut	Nylock Nut
½"-20	55-70 ft-lb (75-95 N-m)	45-55 ft-lb (61-75 N-m)
¾"-16	115-125 ft-lb (156-169 N-m)	100-115 ft-lb (136-156 N-m)
⅞"-14	150-180 ft-lb (203-244 N-m)	130-150 ft-lb (176-203 N-m)
1"-14	275-330 ft-lb (373-447 N-m)	250-275 ft-lb (339-373 ft-lb)
1⅛"-12	300-375 ft-lb (407-508 N-m)	275-300 ft-lb (373-407 N-m)
1¼"-12	300-375 ft-lb (407-508 N-m)	275-300 ft-lb (373-407 N-m)

TIRE PRESSURE

WARNING

Explosive separation of rim and tire parts can cause death or serious injury. Overinflation, rim and tire servicing, improper use of rims and tires, or worn or improperly maintained tires could result in a tire explosion.

- Maintain proper tire pressure. Inflating a tire above or below the recommended pressure can cause tire damage.
- Mount tires only by properly trained personnel using proper equipment.
- Replace tires with cuts or bubbles. Replace damaged rims. Replace missing lug bolts and nuts.
- Do not weld or heat wheel assembly. Heating increases tire pressure.

TRANSPORT TIRES

WARNING

Overinflation of tires can result in explosive separation of rim and tire and cause death or serious injury. Different size rims are designed for different tire pressures. Inflate to correct pressure for specific rim size.

Do not exceed following maximum pressures:

- Rims stamped with “224”: 75 psi (517.1 kPa) maximum pressure.
- Rims stamped with “276”: 100 psi (689.4 kPa) maximum pressure.

INFLATION SPECIFICATIONS

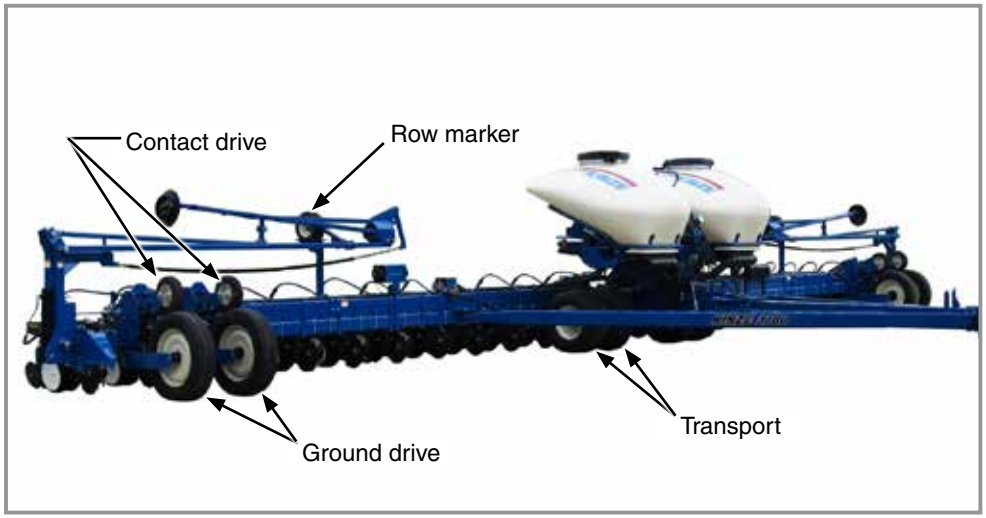

Tire locations (L.H. mirrors R.H. shown)

Ground drive (wings) 255-70R 22.5 . . . . . *75 psi (517.1 kPa)*
Transport - 36" x 16" x 17.5" . . . . . *75 psi (517.1 kPa)*
Contact drive - 4.80" x 8" . . . . . *50 psi (344.7 kPa)*
Row marker - 16" x 6.5" x 8" . . . . . *14 psi (96.5 kPa)*
Liquid fertilizer piston pump (Not shown) 4.10" x 6" . . . . . *50 psi (344.7 kPa)*

FINGER PICKUP SEED METER INSPECTION/ADJUSTMENT

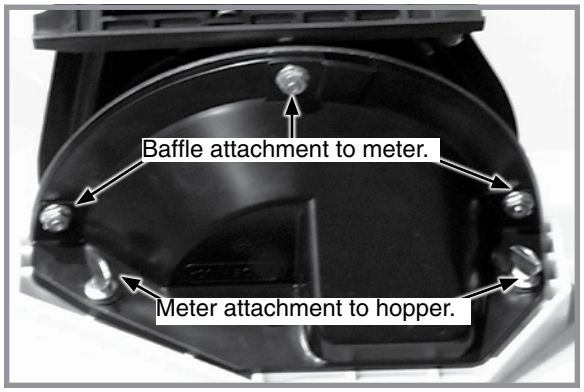

Removing meter and baffle

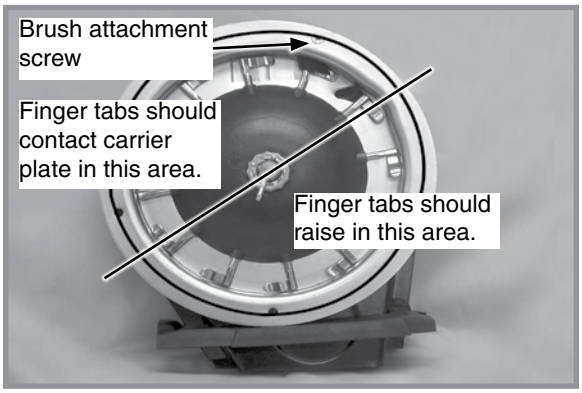

Proper finger operation

1. Remove two thumbscrews and meter from seed hopper and remove three cap screws and baffle from meter assembly.
2. Rotate seed meter drive by hand to ensure springs are holding tabs of fingers against carrier plat and fingers raise in correct area as shown in above photo.

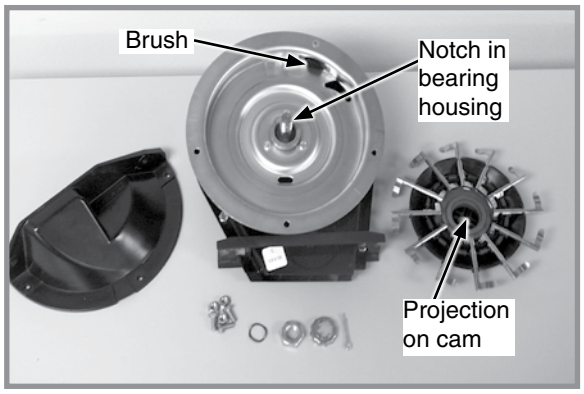

Finger pickup meter parts

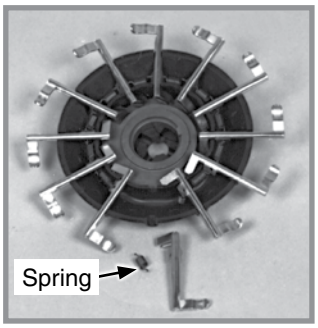

Corn Finger Assembly (Position Spring Opening Toward Holder)

Oil Sunflower Finger Assembly

Buildup of debris or chaff may prevent proper finger operation and requires disassembly and cleaning of finger pickup meter.

1. Remove cotter pin, cover nut and adjusting nut and wave washer (If applicable) from drive shaft.
2. Carefully lift finger holder with fingers and cam off shaft and clean.
3. Check brush for wear and replace if necessary or after every 100 acres (41 hectares) per row of operation (Approximately 800 acres (324 hectares) of corn or sunflowers on a 8 row machine or 1200 acres (486 hectares) on an 12 row machine).

NOTE: It is not necessary to remove finger holder to replace brush.

4. Remove springs from fingers and remove finger from holder by lifting it out of friction fit slot. Life expectancy of these parts is about 600-900 acres (243-364 hectares) per row of operation under average conditions.
5. Reassemble meter in reverse order after cleaning and replacing defective parts. Make sure open end of spring loop is toward inside of finger holder when replacing fingers.
6. Install fingers in holder so holder is flush with carrier plate when assembled. A cam projection aligns with a mating notch in bearing housing to ensure proper operation when assembled.

7. Check indentations on carrier plate for wear before installing finger holder on carrier plate. Excessive wear of carrier plate at indentations will cause over planting especially with small sizes of seed. Inspect carrier plate annually. Life expectancy should be 250-300 acres (100-125 hectares) per row of operation under average conditions.

8. Install wave washer and adjusting nut with finger holder flush against carrier. Tighten adjusting nut to fully compress wave washer. Back off nut ½ to 2 flats to obtain rolling torque of 22 to 25 inch pounds (2.5 N-m to 2.8 N-m).

9. Turn finger holder by hand to make sure it is firmly against carrier plate, but can be rotated with moderate force.

10. Install cover nut and cotter pin. Reinstall baffle.

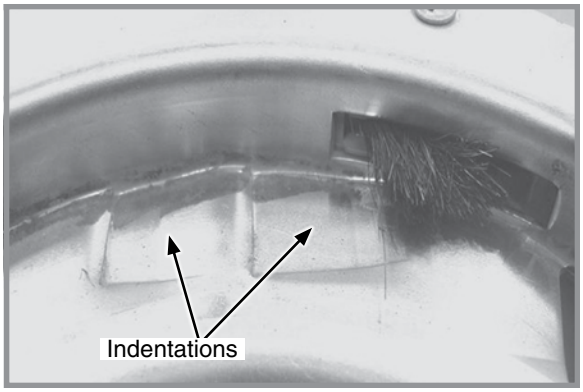

Worn carrier plate

NOTE: Check adjusting nut tightness on each unit after first day of use and periodically thereafter.

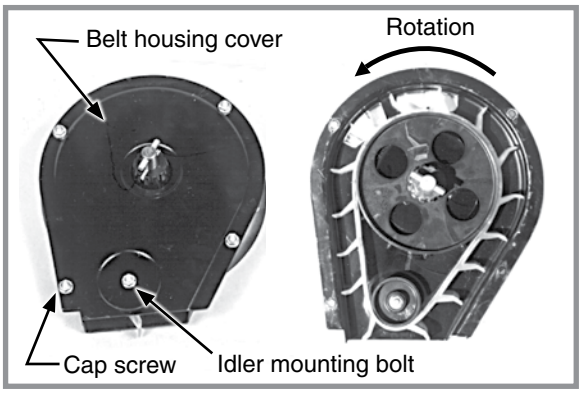

Belt idler

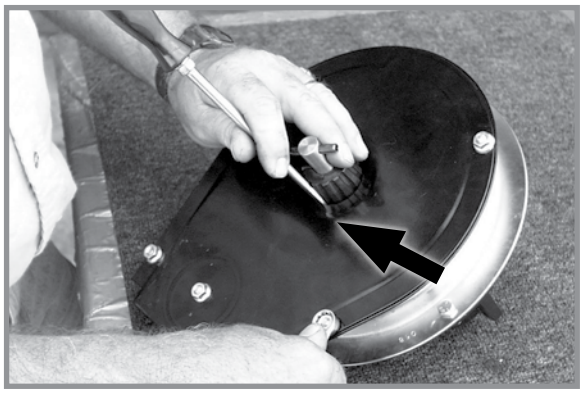
Centering belt housing cover

Remove four cap screws around edge of housing cover and nut from belt idler mounting bolt. Paddles must be correctly oriented as shown above If belt is replaced. A diagram molded into drive sprocket shows correct orientation.

NOTICE	**Do not over-tighten hardware or components may be damaged.**

Reinstall housing cover. DO NOT TIGHTEN hardware. Wedge a screwdriver between sprocket hub and housing cover as shown above. Pry cover down until centered on belt housing and tighten hardware. Rotate meter drive shaft and check idler alignment. Seed belt should “run” centered on idler or with only slight contact with belt housing or cover.

CLEANING FINGER PICKUP SEED METER FOR STORAGE

1. Disassemble meter and blow out any foreign material.

2. Wash ONLY in mild soap and water. Do not use gasoline, kerosene, or any other petroleum based product. Dry thoroughly.

3. Coat lightly with a rust inhibiter.

4. Rotate finger assembly so finger does not touch brush.

5. Reassemble and store in a dry, rodent-free location.

BRUSH-TYPE SEED METER MAINTENANCE

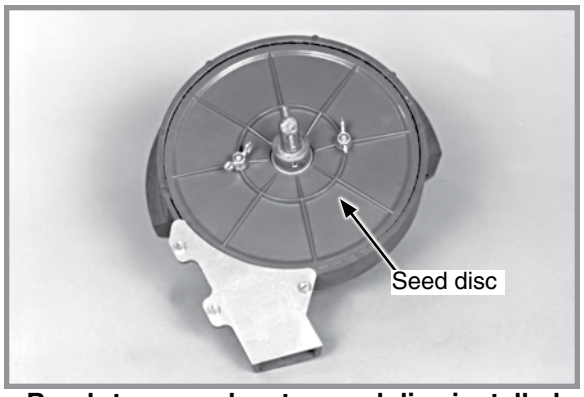

Brush-type seed meter seed disc installed

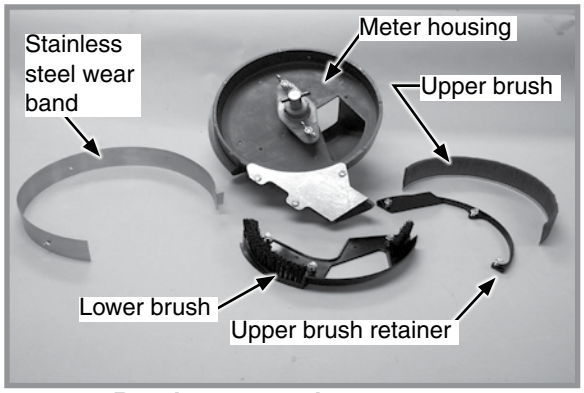

Brush-type seed meter parts

Use clean, high quality seed. Damaged or cracked seed, hulls, or foreign materials can become lodged in upper brush and greatly reduce meter accuracy. Remove seed disc daily and check for buildup of foreign material on seed disc, particularly in seed loading slots. Clean disc by washing it with soap and water. Check for cracked seed, hulls, etc. lodged between brush retainer and stainless steel wear band which can greatly reduce accuracy of the meter because upper brush will not be able to retain seed in seed disc pocket. Thoroughly clean brush areas of meter housing.

SEED DISC WEAR

Most seed disc wear is found in the agitation groove area (area between seed loading slots). Wear affects planting accuracy at high RPM. Lay a straight edge across disc surface at agitation groove area and measure gap between disc and straight edge. If agitation groove areas are worn in excess of .030" (7.6 mm) and accuracy starts to drop off at higher meter RPM, replace seed disc. Estimated seed disc life expectancy under normal operating conditions is approximately 200 acres (81 hectares) per row. Severe operating conditions such as dust, lack of lubrication or abrasive seed coating could reduce seed disc life expectancy to under 100 acres (40.5 hectares) per row.

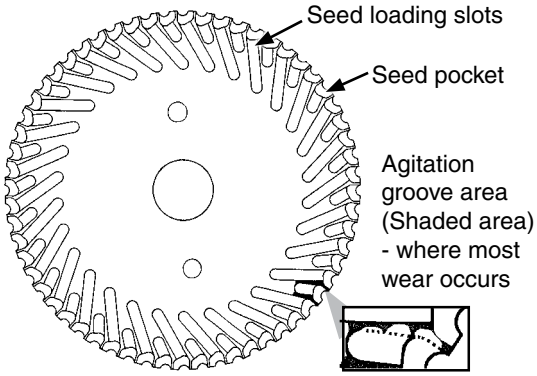

STAINLESS STEEL WEAR BAND

NOTICE

If wear band wears through or if meter is used without wear band in place, meter housing may be damaged.

Stainless steel wear band protects meter housing from wear and is .030" (.076 cm) thick. Replace wear band when there is approximately .020" (.050 cm) of wear in primary wear area. Estimated life expectancy of stainless steel wear band is 240-800 acres (97-324 hectares) per row.

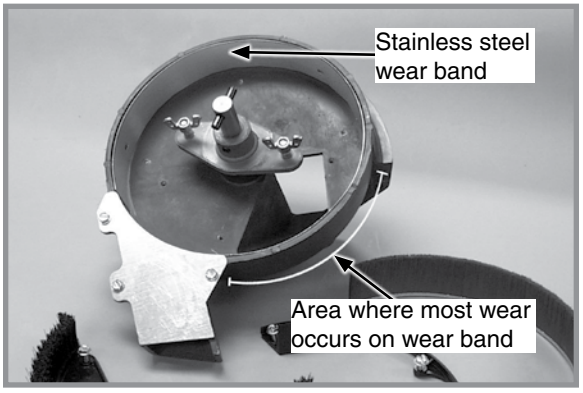

Stainless steel wear band

UPPER BRUSH

Upper brush holds seed in seed disc pocket in seed retention area. Brush must apply enough pressure against seed in seed disc pocket as disc rotates through seed retention area to prevent seed from dropping out of disc pocket. A damaged spot, excessive brush wear, or foreign material lodged in brush may greatly reduce meter performance.

Replace upper brush at 120-400 acres (49-162 hectares) per row of use or sooner if damage or excessive wear is found. Position upper brush into inner perimeter of seed retention area. Make sure base of brush is tight against bottom of meter housing. Install brush retainer and three hex head screws. Tighten screws in sequence shown in photo at right.

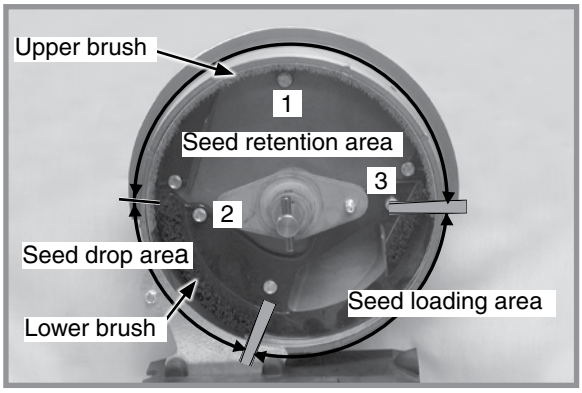

Upper brush installation

NOTE: Use GD11122 upper brush retainer for soybean and cotton discs. Use GD8237 upper brush retainer for milo/grain sorghum discs.

LOWER BRUSH

Lower brush moves seed down seed loading slots to seed pockets, isolates seed in reservoir from entering seed tube, and cleans seed loading slots. Estimated lower brush life expectancy is 240-800 acres (97-324 hectares) per row. Replace lower brush if bristles are deformed or missing, or if there are cracks in brush retainer.

CLEANING BRUSH-TYPE SEED METER FOR STORAGE

1. Remove meter from seed hopper by removing two thumbscrews securing meter to hopper.
2. Remove seed disc and wash with soap and water and dry thoroughly.
3. Remove three hex head screws from brush retainer. Remove brush retainer and upper brush.
4. Remove three hex head screws from lower brush. Remove lower brush and stainless steel wear band.
5. Wash all parts and meter housing with soap and water and dry thoroughly.
6. Inspect all parts and replace worn parts.
7. Reassemble meter except for seed disc. Store meter in a dry, rodent-free space with seed disc removed.

VACUUM SEED METER MAINTENANCE

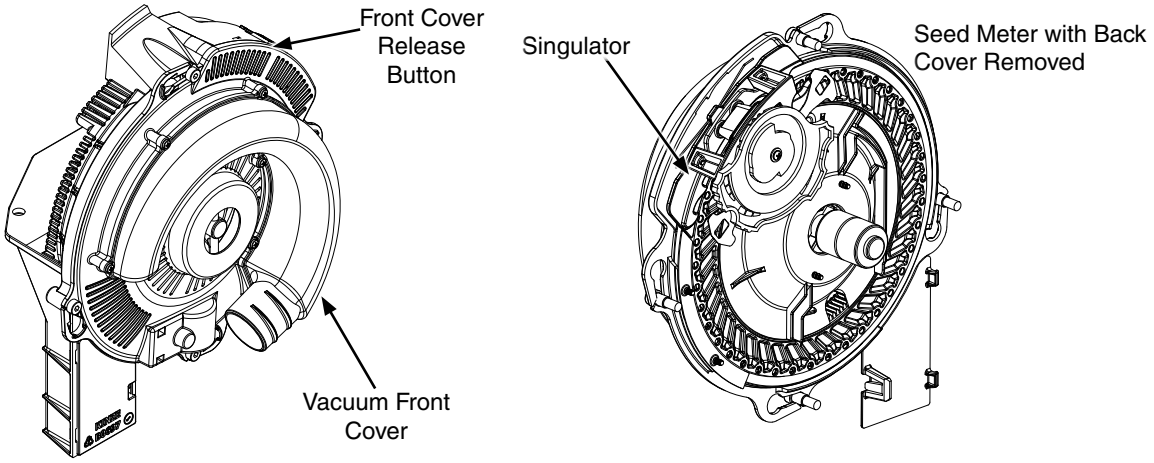

Before each planting season inspect seed discs and singulator and clean or replace as needed.

Use clean, high quality seed for maximum meter accuracy. Damaged or cracked seed, hulls, and foreign material may become lodged in seed disc orifices and greatly reduce meter accuracy.

Inspect and clean seed discs daily checking for any buildup of foreign material and blocked orifices. If seed disc orifices are plugged frequently with seed remnants, remnants ejector wheel may need to be replaced. Clean seed disc by washing it with soap and water. Dry thoroughly.

Inspect singulator blades and guide for wear after every 200 acres (81 hectares) per row of operation. If adjustment of singulator blade does not affect meter performance or if blades appear worn, singulator blade may need to be replaced.

Replace seed disc or vacuum seal if abnormally high vacuum is required or if consistent operation cannot be achieved.

See "Preparation for Storage" on page 5-37 for additional Vacuum Seed Metering System maintenance.

NOTE: Remove seed discs from meters for annual storage and store them vertically on a dowel or pipe.

SEED METER CLEANOUT

NOTE: Use of damaged seed or seed containing foreign material will cause plugging of seed cell orifices and require more frequent seed meter cleanout to prevent underplanting.

Thorough seed meter cleanout is important to maintain genetic purity.

1. Disengage seed drive and remove seed hopper and meter.
2. Dump seed from right rear corner of hopper into a container.
3. Lay hopper on its right side. Push release button and rotate seed meter vacuum cover clockwise to align keyhole slots with bolt heads. Lift off cover.
4. Rotate seed disc hub clockwise to unlock and remove seed disc.
5. Empty meter.
6. Thoroughly inspect meter to ensure all seed is removed.
7. Replace seed disc. Install vacuum cover.

GAUGE WHEEL ADJUSTMENT

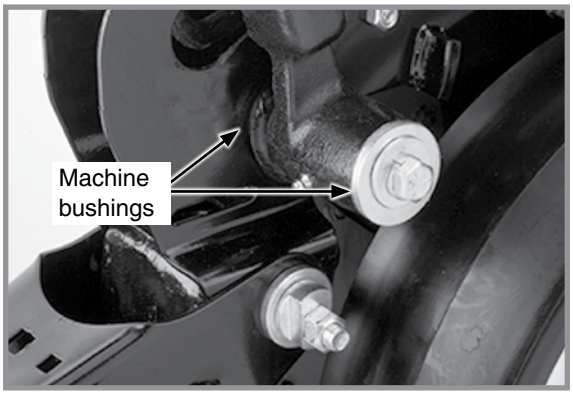

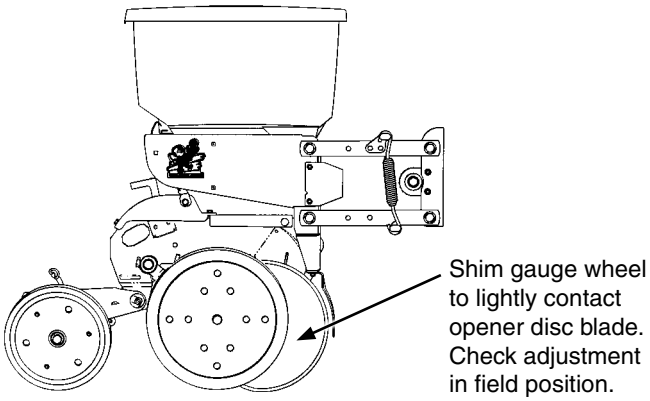

Gauge wheel adjustment

Gauge wheels should lightly contact opener blades to prevent accumulation of dirt or trash. Gauge wheels and opener blades should turn with only slight resistance.

Add or remove machine bushings between shank and gauge wheel arm to adjust clearance between gauge wheels and opener blades. Store remaining machine bushings between gauge wheel arm and flat washer on outer side of gauge wheel arm.

NOTE: It may be desirable to space gauge wheel further from blade when operating in sticky soils.

GAUGE WHEEL ARM PIVOT SPINDLE REPLACEMENT

1. Remove gauge wheel and arm assemblies from shank assembly.
2. Remove ½" x ¾" cap screw that locks pivot spindle in place and remove spindle.
3. Install replacement spindle and position as shown. Exact centering is critical.
4. Install ½" x ¾" cap screw and torque to lock pivot spindle in place.
5. Install gauge wheel and arm assemblies. Shim for proper gauge wheel tire/disc blade clearance.

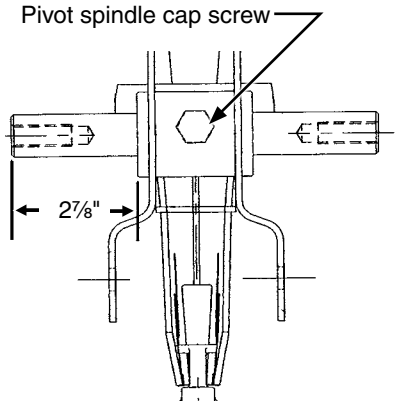

GAUGE WHEEL ARM BUSHING/SEAL REPLACEMENT

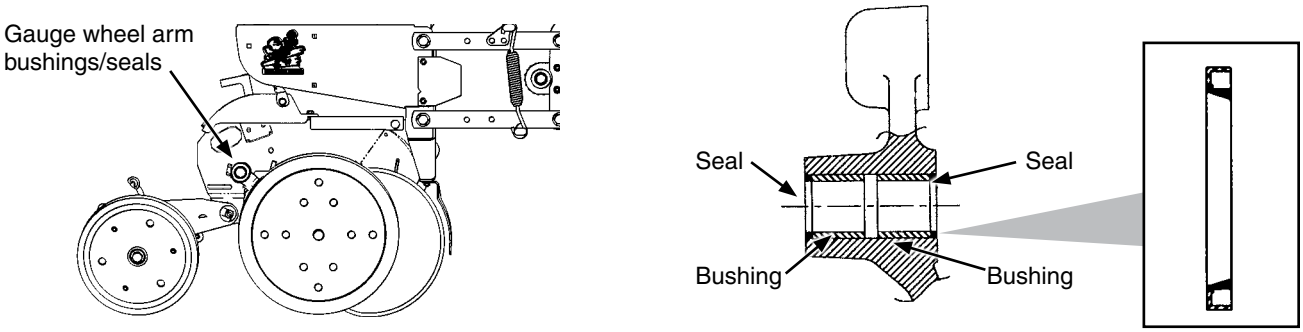

NOTE: Gauge Wheel Arm Bushing and Seal Driver Kit (G1K296) is available through your Kinze Dealer.

1. Remove gauge wheel from arm.
2. Remove gauge wheel arm from shank assembly.
3. Remove seal and bushing and discard. Clean and dry inner bore.
4. Drive/press replacement bushing inside bore of arm to a depth of .125" (3.2 mm) below flush.
5. Coat wiping edge of seal with grease.
6. Drive/press seal into place with lip to outside.

NOTE: Use extra care to protect the sealing lip during installation. Apply uniform pressure to assemble the seal into the bore of the arm. Never apply a direct hammer blow to the seal surface.

7. Inspect gauge wheel pivot spindle.
8. Reinstall gauge wheel arm assembly and gauge wheel.

NOTE: Use special machine bushing between gauge wheel arm and gauge wheel.

9. Shim for proper gauge wheel tire/disc blade clearance.
10. Lubricate with an SAE multipurpose grease.

15" SEED OPENER DISC BLADE/BEARING ASSEMBLY

NOTICE

Excessive blade contact may result in premature disc opener bearing/ hub failures and excessive wear on seed tube guard/inner scraper. When properly adjusted, if one blade is held in fixed position, opposite blade should rotate with less than 5 pounds force (22 newtons) at outer edge of blade.

Maintain approximately 1" ± ½" (3 ± 5 cm) of blade-to-blade contact to properly open and form seed trench. As blade diameter decreases due to wear, it is necessary to relocate machine bushings from inside to outside to maintain 1" ± ½" (3 ± 5 cm) of contact.

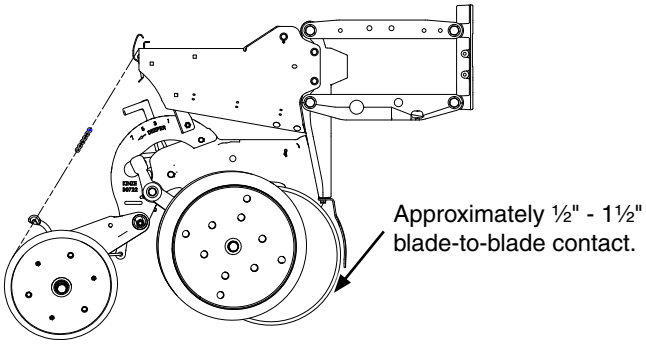

NOTE: Proper blade clearance is critical. Blades should have 1" ± ½" (3 ± 5 cm) contact in this area. When blades are turned by hand in opposite directions against each other, there should be only light resistance to turning. Re-adjust blade scraper if necessary to center it between the blades.

NOTE: Replace blades If proper blade-to-blade contact cannot be maintained after relocating machine bushings or if blade diameter wears below 14½" (36.8 cm).

REPLACE DISC BLADE/BEARING ASSEMBLY

NOTE: Only bearing may need to be replaced if there is excessive endplay or if bearing sounds or feels rough when disc blade is rotated.

1. Remove gauge wheel, scraper, and bearing dust cap.

2. Remove cap screw, washer and disc blade/bearing assembly. Machine bushings between shank and disc blade are used to maintain approximate 1" ± ½" (3 ± 5 cm) of blade-to-blade contact.

NOTICE

Left hand side of opener uses a left hand threaded cap screw. DO NOT OVER TIGHTEN. Damage to shank threads require replacement of row unit shank assembly.

3. Install machine bushing(s), new disc blade bearing assembly, washer and cap screw. Torque ⅝"-11 Grade 5 cap screw to 110 ft-lb (149.14 N-m).

NOTE: Replace disc blades only with disc blades of equal thickness.

4. Install bearing dust cap, scraper, and gauge wheel.

15" Seed Opener Disc Blade/Bearing Assembly (CONTINUED)

REPLACE BEARING ONLY

1. Remove gauge wheel, scraper, bearing cap, cap screw, washer and disc blade/bearing assembly.
2. Remove ¼" rivets from bearing housing to expose bearing.
3. Installing new bearing. install three evenly spaced ¼" cap screws into three of six holes in bearing housing to hold bearing and bearing housing in place. Install rivets in other three holes. Remove ¼" cap screws and install rivets in those three holes.
4. Reinstall disc blade/bearing assembly, washer and cap screw. Torque ⅝"-11 cap screw to 110 ft-lb (149.14 N-m).
5. Install bearing dust cap, scraper, and gauge wheel.

SEED TUBE GUARD/INNER SCRAPER

Seed tube guard protects seed tube and acts as inner scraper for seed opener disc blades.

Remove seed tube and check for wear. Excessive wear on seed tube indicates a worn seed tube guard. Replace seed tube guard if it measures ⅝" or less at lower end. A new seed tube guard measures approximately ⅞".

NOTE: No till planting or planting in hard ground conditions, especially when planter is not equipped with no till coulters, and/or excessive blade-to-blade contact increases seed tube guard wear and requires more frequent inspection and/or replacement.

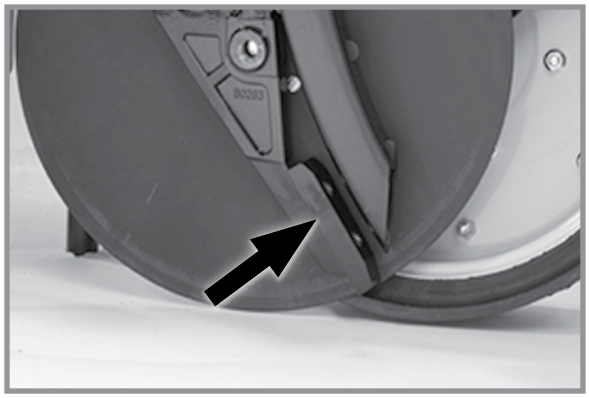

Seed tube guard/inner scraper (Gauge wheel/seed opener disc blade removed

NOTICE

Over tightening hex socket head cap screws may damage shank threads and require replacement of shank. An excessively worn seed tube guard may allow blades to wear into row unit shank, also requiring replacement of shank.

Remove seed tube and two hex socket head cap screws that attach seed tube guard. Hold replacement seed tube guard centered between seed opener disc blades. Install hex socket head cap screws. DO NOT TIGHTEN. Using a clamp or vise-grip, squeeze opener blades together in front of seed tube guard. Tighten seed tube guard retaining screws. Remove clamps. Distance between seed tube guard and opener blades should be equal on both sides. Reinstall seed tube.

FRAME MOUNTED COULTER

NOTE: Torque ⅝" spindle hardware to 120 ft-lb (162.7 N-m)

See “Frame Mounted Coulter” in Row Unit Operation section of this manual for depth and spring adjustment.

Replace 16" diameter coulter blade (1" fluted, 1" bubbled or ¾" fluted) when worn to 14½" (maximum allowable wear).

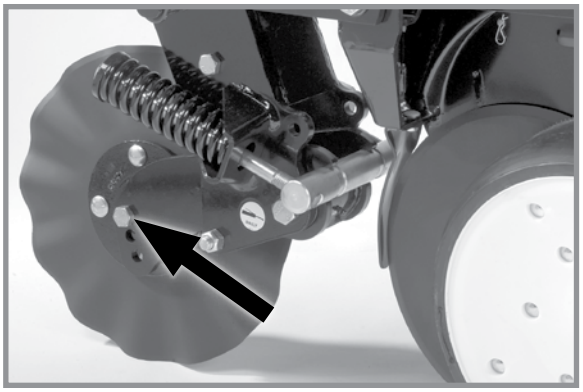

Frame mounted coulter spindle

RESIDUE WHEELS (FOR USE WITH FRAME MOUNTED COULTER)

Wheel hub is equipped with sealed bearings. Replace bearings if a bearing sounds or feels rough when wheel is rotated.

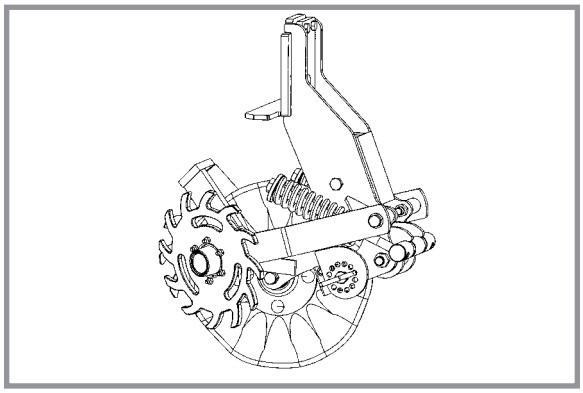

Frame mounted coulter residue wheels

SPIKED CLOSING WHEEL

Inner parts of spiked closing wheel will begin to wear at approximately 70% of life. Flip/reverse wheel to utilize remaining life of wheel.

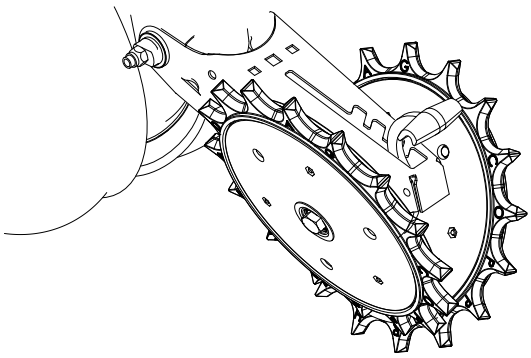

Row Unit Spiked Closing Wheel

ROW UNIT MOUNTED DISC FURROWER

Lubricate bushings in support arm mounting bracket at frequency indicated in Lubrication of this section. Check each bolt for proper torque. If bolt is loose, it should be removed and bushing inspected for cracks and wear. Replace bushings as necessary.

NOTE: Use only hardened flat washers. Replace damaged flat washers with proper part. Torque bolts to 130 ft-lb (176.2 N-m).

Blade hubs are equipped with sealed bearings. Replace bearings if a bearing sounds or feels rough when wheel is rotated.

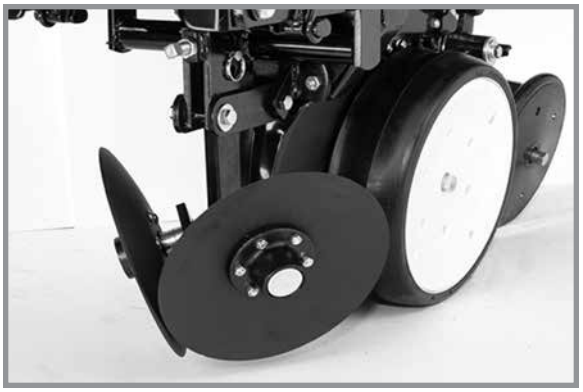

Row unit mounted disc furrower

Replace solid or notched 12" diameter blades when worn to 11" (28 cm).

ROW UNIT MOUNTED NO TILL COULTER

Check nuts and hardware periodically for proper torque. Be sure coulter is positioned square with row unit and aligned in front of row unit disc opener.

NOTE: Torque ⅝" spindle hardware to 120 ft-lb (162 N-m).

Coulter blade can be adjusted to one of four settings. Initially blade is set in highest position. As blade wears it can be adjusted to one of three lower settings. See “Row Unit Mounted No Till Coulter” in Row Unit Operation section of this manual.

Replace 16" diameter coulter blade when worn to 14½" (37 cm).

Row unit mounted no till coulter

COULTER OR ROW UNIT MOUNTED RESIDUE WHEELS

Coulter mounted residue wheels

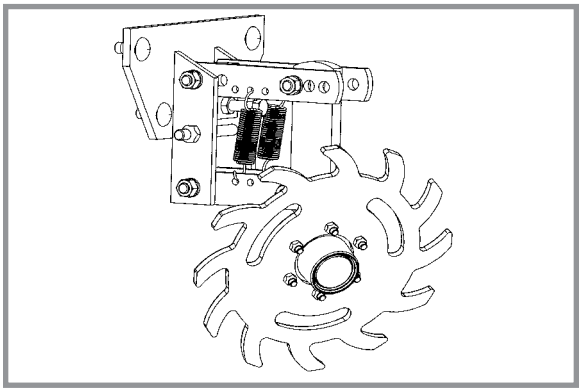

Row unit mounted residue wheels

Wheel hubs are equipped with sealed bearings. If a bearing sounds or feels rough when wheel is rotated, replace them.

GRANULAR CHEMICAL ATTACHMENT

Before storing planter, disengage granular chemical drive by rotating throwout knob ¼ turn counterclockwise. Remove drive chain and empty and clean all granular chemical hoppers. Clean drive chains and coat them with a rust preventive spray or submerge chains in oil. Inspect and replace worn or broken parts.

Install hoppers and chains. Check chain alignment.

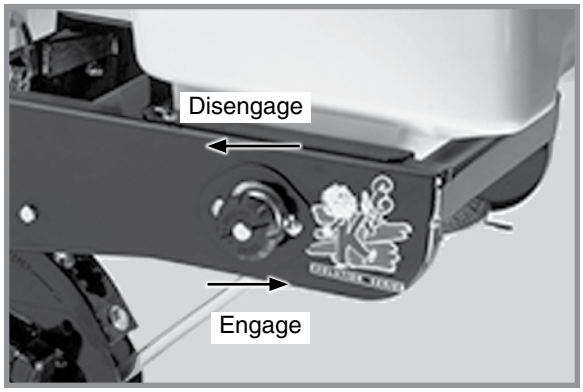

Granular chemical throwout knob

SPRING TOOTH INCORPORATOR

Before storing planter, inspect each spring tooth incorporator and replace worn or broken parts. Check for loose hardware and tighten as needed.

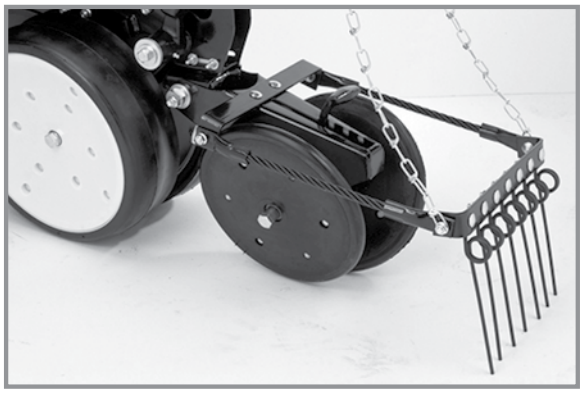

Spring tooth incorporator

WRAP SPRING WRENCH CLEANING AND REPAIR

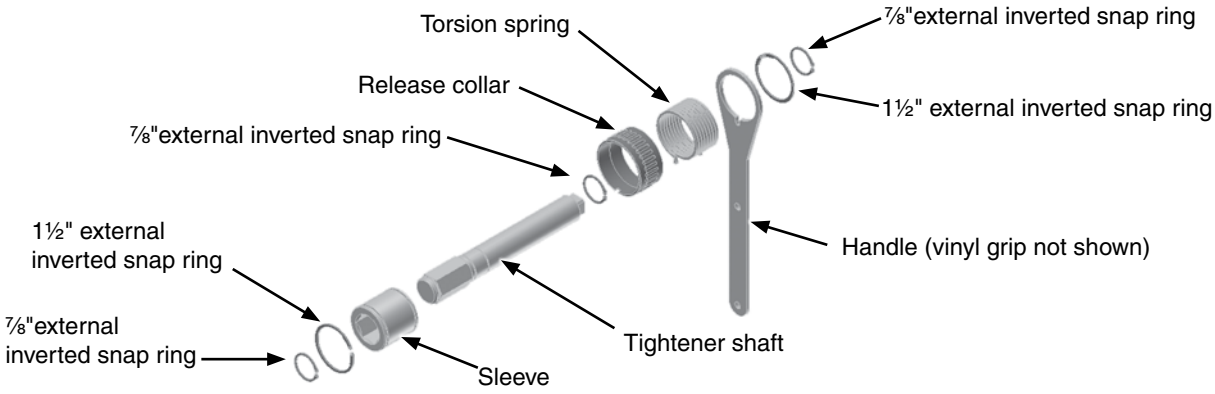

1. Remove ¼"-20 x ½" cap screw securing idler with sprockets to wrench tightener shaft and remove wrap spring wrench from planter.

2. Remove split rings and disassemble as shown above. Soak metal parts in solvent and thoroughly clean.

NOTE: L.H. and R.H. release collars and torsion springs are different. Order correct parts for each assembly.

3. Replace damaged parts. Lubricate parts with high quality silicon lubricant and reassemble.

4. Reinstall wrap spring wrench on planter.

SINGLE AND TWO-SPEED POINT ROW CLUTCH MAINTENANCE

Point row clutch is permanently lubricated and sealed and requires no periodic maintenance. Two-speed point row clutch is similar in design and operation to standard point row clutch except for two-speed function.

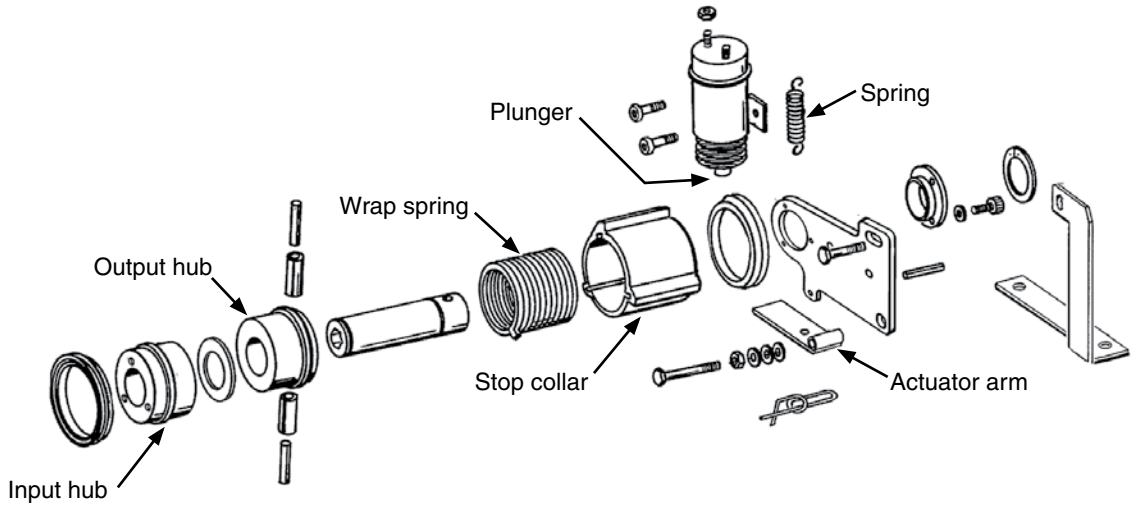

Single point row clutch main parts

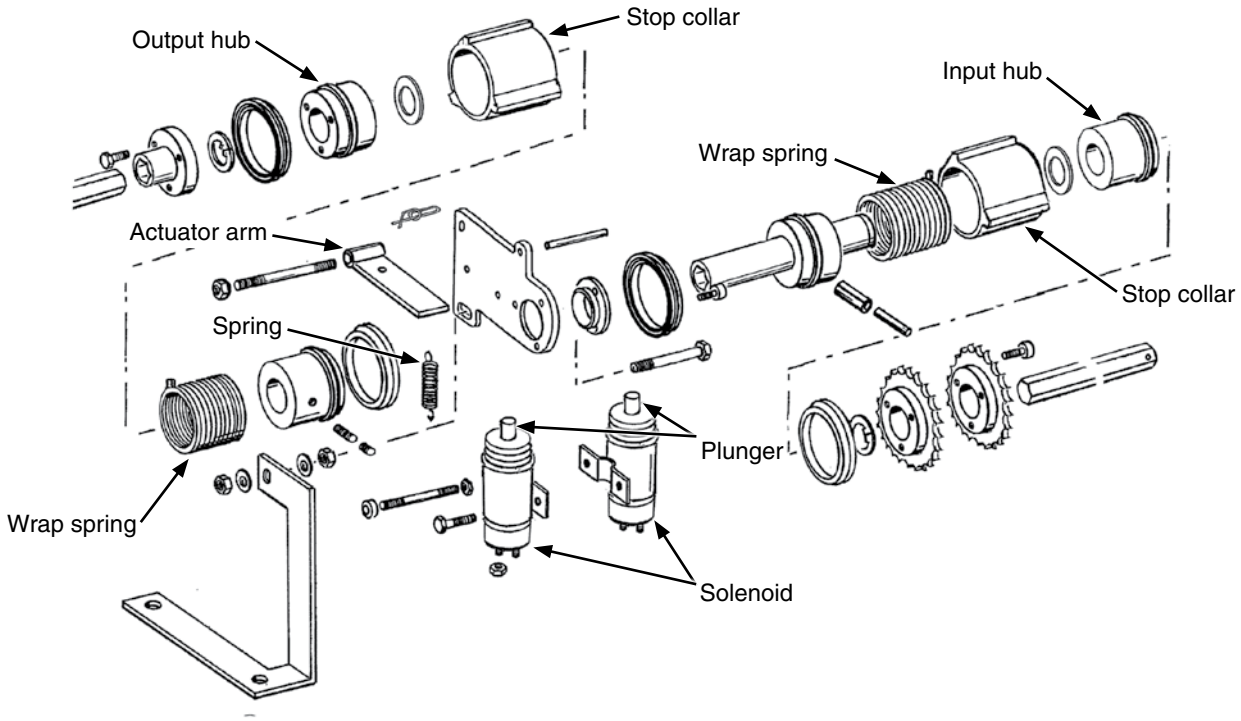

Two-speed point row clutch main parts

TESTING AND FUSE REPLACEMENT

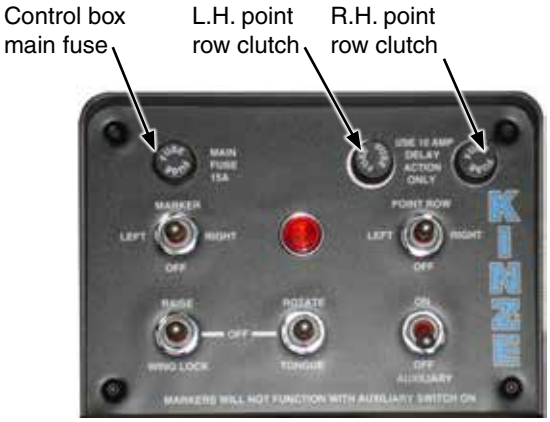

Single speed point row clutch control box (Front View)

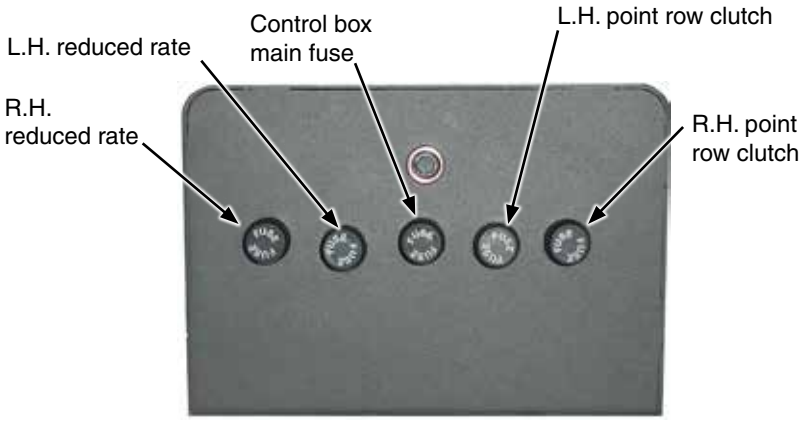

Two- speed point row clutch control box (Rear view)

NOTE: Replace all point row fuses with MDL 10 amp slow blow fuses.

If the clutch or clutches fail to operate, first determine if problem is electrical or mechanical.

Place operation switch in RIGHT or LEFT position. Solenoid plunger will retract causing a clicking sound if it is operating properly. Touch plunger with a metal object to check if it is electrically magnetized. Check clutch and wiring harness for power with a test light or volt meter.

NOTE: R.H. clutch operates clockwise and L.H. clutch operates counterclockwise. Clutch parts such as the wrap spring are side specific. Use correct repair part if a clutch must be repaired.

Also see “Point Row Clutch Troubleshooting” in Troubleshooting section.

ACTUATOR ARM ADJUSTMENT

Gap between actuator arm and stop on stop collar should be ⅛"(±1⁄32") (.3 cm (± .8 mm)) when solenoid is NOT engaged.

Loosen nut on mounting pin and move pin in slot until there is a ⅛"(±1⁄32") (.3 cm (± .8 mm)) gap between arm and stop on stop collar. Retighten nut.

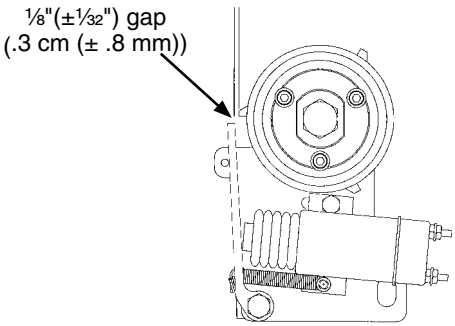

PLANTER MOUNTED PUMP DRIVE AND OIL COOLER

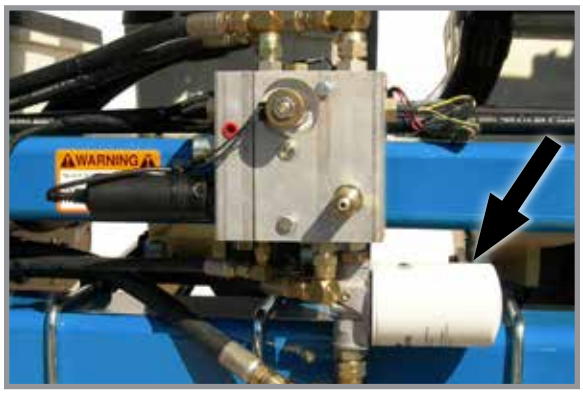

Oil filter location

Oil cooler location

NOTICE	**Clean and grease PTO shaft coupling with high-pressure industrial coupling grease (Chevron® coupling grease or equivalent) meeting AGMA CG-1 and CG-2 Standards each time driveshaft is installed or premature wear and equipment failure can occur.**

NOTE: Periodically check and clean oil coolers.

1. Replace 10-micron spin-on filters on each wing annually.
2. Fill system with SAE 10W-20 multigrade wide temperature range transmission hydraulic fluid. Reservoir capacity is approximately 10 gal (37.8L).
3. Start system and run with tractor at idle and fans turned off for 1-2 minutes. Switch fans to full speed and run with tractor at idle for 1-2 minutes.
4. Check reservoir fluid level and fill as required. Hydraulic fluid level should be within 1"-2" (2.5 cm - 5 cm) from top of reservoir after pump has run and hydraulic hoses have been primed to allow fluid to expand when heated.

DIGITAL VACUUM GAUGE ADJUSTMENT

Digital vacuum gauge is factory calibrated. However, vacuum varies throughout manifold system and it may be necessary to adjust digital readout to match actual vacuum at meter.

Load seed discs with seed and compare digital vacuum gauge readouts to reading taken from analog gauges or a hand held gauge at several meters along length of planter. Elbow connections located on covers of seed meters allow testing of meter vacuum levels without removing vacuum hoses.

Digital vacuum gauge

If there is more than 1" or 2" (H_2O) difference, adjust digital gauge by inserting a small flat bladed screwdriver into opening on back of digital gauge housing and turning potentiometer until digital gauge displays vacuum present at meter. Compare readings at 10" and 20" of vacuum.

CHECK VALVE

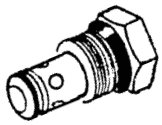

A check valve is located in each vacuum fan motor block assembly and operates as a return line check to prevent vacuum fan motor reverse operation. Check valves are also located in valve block on left wing and trap oil flow in planter's lift system to keep toolbar level during field operation. Another check valve is located in junction block on left wing of planter on 24 Row 30" and 36 Row 20" sizes. Remove and inspect valve If it does not operate properly. Check for foreign material and if O-ring is leaking internally. Replace if defective.

DENTENT LEVER VALVE

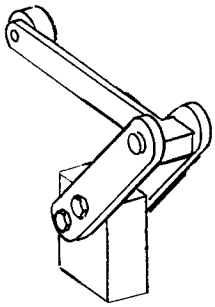

Detent lever valve, located near tower assembly on R.H. side of machine, blocks oil flow from master cylinders until slave cylinders are at same height as master cylinders when planter is being lowered from transport into field position. Contact your Kinze Dealer for service.

FLOW CONTROL VALVES

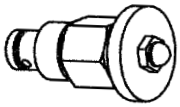

Two flow control valves are located in valve block on right wing of planter. Flow control valves should be adjusted for row marker raise and lower speed as part of assembly procedure or upon initial operation. If valve fails to function properly or requires frequent adjustment, it should be removed for inspection. Check for foreign material and contamination on valve and seating areas of valve body. Replace defective components.

PRESSURE RELIEF VALVES

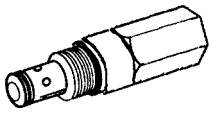

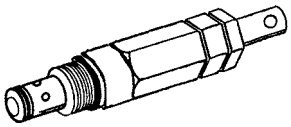

Pressure relief valve in valve block on left wing of planter functions during lowering out of raised transport sequence. Valve is factory set and should require no additional adjustment. Pressure relief valve located in valve block on tongue functions during tongue extend cycle. This pressure relief valve ensures latch cylinder extends and releases prior to tongue extending. Valve is factory set and should require no additional adjustment. Contact your Kinze Dealer for service.

NOTICE	**Connect hydraulic motor case drain to a case drain return line with zero pressure on tractor or hydraulic motor will be damaged. DO NOT connect hydraulic motor case drain to SCV outlet. Contact tractor manufacturer for specific details on "zero pressure return".**

RELIEF VALVE CARTRIDGE

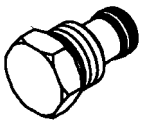

Pressure relief valve located in vacuum fan motor block assembly helps prevent damage to vacuum fan motor by limiting pressure in the motor case drain line. It is set to open at 35 PSI. If valve fails to function properly, it should be removed for inspection. Check for foreign material and contamination on valve and the seating area of valve body. Replace if defective.

SOLENOID VALVE

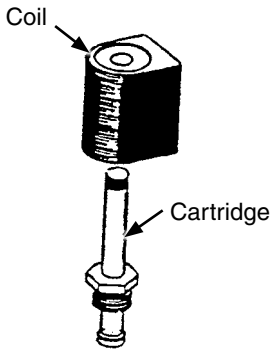

Solenoid valve consists of a chambered body with an electric coil actuated cartridge valve.

If solenoid or solenoids fail to operate, first determine if problem is electrical or hydraulic. If valve is working properly, a click will be heard when solenoid coil is energized and valve stem opens. If no sound is heard, check solenoid coil by touching top of coil housing with a metallic object such as a pliers or screwdriver. If coil is working properly, coil housing will be strongly magnetized when energized. If voltage to coil is low it will be weakly magnetized when energized and no click will be heard.

STROKE LIMITER VALVE

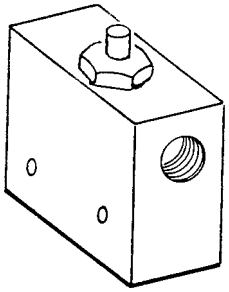

Stroke limiter valve, located near tower assembly on L.H. side of machine, limits height planter will raise during turn around when planter is in field operation. Contact your Kinze Dealer for service.

CHAIN TENSION ADJUSTMENT

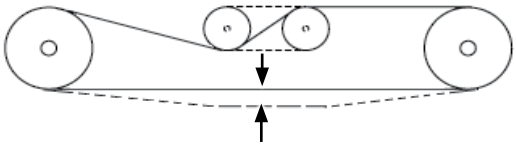

Chain link storage location (each wing)

Most drive chains have a spring loaded idler and are self-adjusting. The only adjustment needed is to shorten chain if wear stretches chain and reduces spring tension. Check idler pivot point periodically to ensure they rotate freely.

On chains with slotted idlers for adjustment, adjust so chain has ¼" (6 mm) or less sag at longest span. See “Wrap Spring Wrench Assembly” for additional information.

Additional chain links can be found in the storage area located at end of planter frame on inboard side of transport hook.

STROKE LIMITER (HEIGHT STOP) VALVE ADJUSTMENT

Field turn around height of toolbar should measure 39"-41" (99 cm - 104 cm) from ground if stroke limiter valve is correctly adjusted.

1. Lower planter to ground and hold hydraulic lever for 15-20 seconds to rephase system.

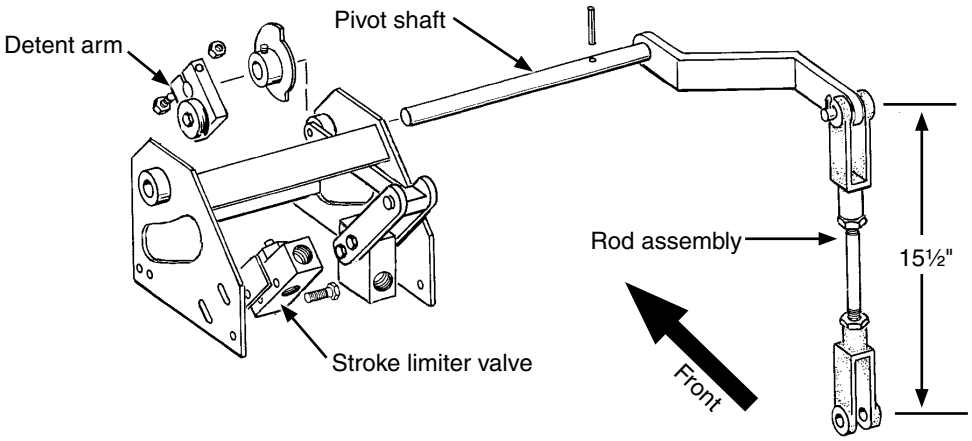

2. Check rod assembly adjustment bolt is set at 15¾" pin to pin when planter is fully lowered. Adjust as needed.

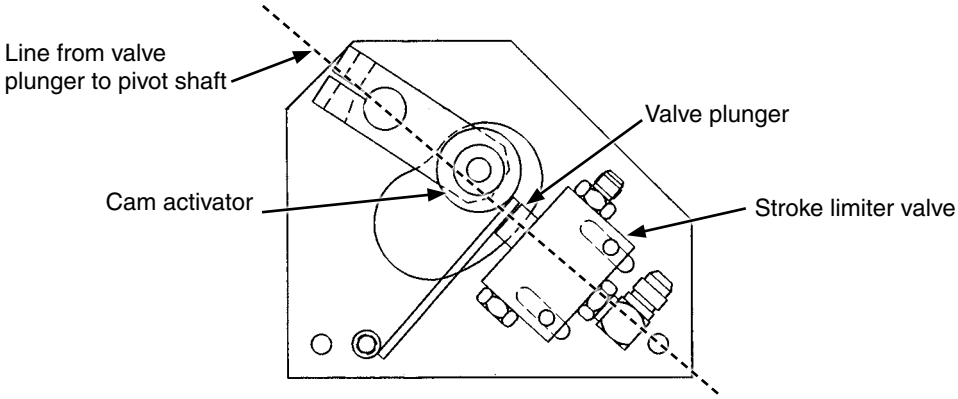

3. Check stroke limiter (height stop) valve plunger is depressed and pointing in a straight line to center of pivot shaft on cam activator.

4. Loosen detent arm (height stop assembly) clamping bolt and rotate detent arm over depressed stroke limiter valve plunger. Valve plunger should be fully depressed when detent arm is rotated over plunger arm, but must not bind. If binding occurs, move valve assembly away from detent arm while keeping valve plunger aligned with pivot shaft. Slide stroke limiter valve up or down in slotted mounting holes as needed to adjust. Tighten stroke limiter valve mounting bolts and recheck adjustment. Be sure detent arm is positioned as shown and tighten detent arm clamping bolt.

5. Raise planter until stroke limiter valve (height stop assembly) halts lift cylinder. Toolbar should measure 39"-41" (99 cm - 104 cm) from ground. If adjustment is needed, loosen detent arm clamping bolt and rotate detent arm counterclockwise to reduce and clockwise to increase lift height. Tighten clamping bolt and mark a line on detent arm and cam activator shaft for easier alignment later.

NOTE: When lowering from transport position, planter toolbar should level out to a height of 39-41" (99 cm - 104 cm) from ground at field turn around. If it doesn't, rephase and/or remove air from the hydraulic lines and recheck toolbar height. Repeat above adjustments as needed.

DETENT LEVER (LOWERING CONTROL) VALVE ADJUSTMENT

Center of planter should drop until toolbar is level and then entire planter should lower evenly when lowering planter for field operation from transport position if detent lever valve is correctly adjusted.

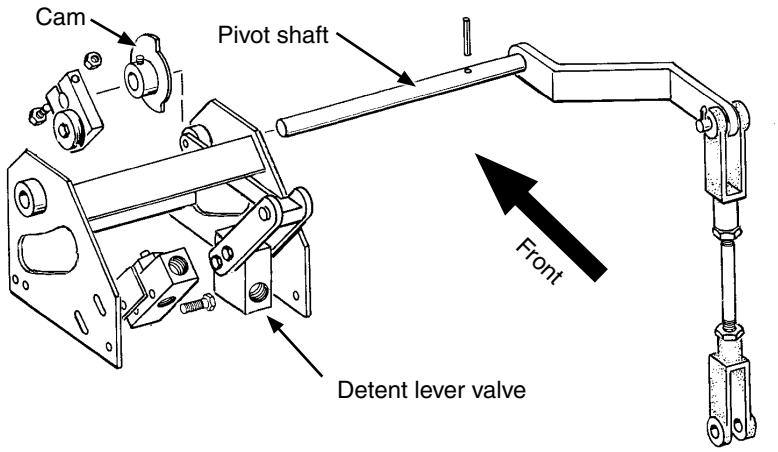

1. Raise planter to field turn around position and check toolbar height is 39"-41" (99 cm - 104 cm). Adjust following procedure for stroke limiter valve adjustment. Stroke limiter (height stop) valve must be correctly adjusted prior to adjusting detent lever (lowering control) valve.

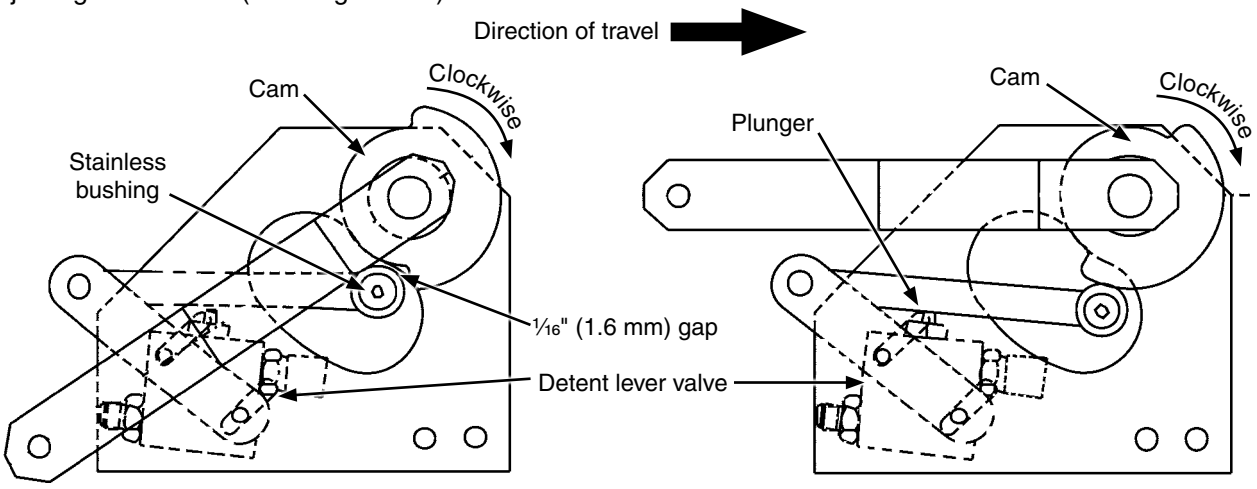

Planter fully raised **Planter lowering - toolbars level**

2. Raise planter to fully raised position. With cam positioned as shown, adjust detent lever (lowering control) valve in its mounting slots so there is 1/16" (1.6 mm) gap between stainless bushing and cam. Lower edge of cam must be above pivot point of stainless bushing.

NOTE: While lowering planter, center cylinders should begin to retract while wing cylinders stay extended. When toolbar becomes level, large radius of cam should cause arm to depress plunger on detent lever valve allowing wing cylinders to start retracting.

3. Lower planter. If center of planter drops lower than wings, loosen set screws and rotate cam clockwise. If wing cylinder begins to retract too early and wings drop lower than center of planter, rotate cam counterclockwise. Adjust cam with planter in raised position.

4. After final adjustment, remove one set screw and drill a depression in cam activator shaft with a 1/4" drill bit. Reinstall set screw and repeat with second set screw. This prevents cam from slipping on pivot shaft.

ROW MARKER BEARING LUBRICATION OR REPLACEMENT

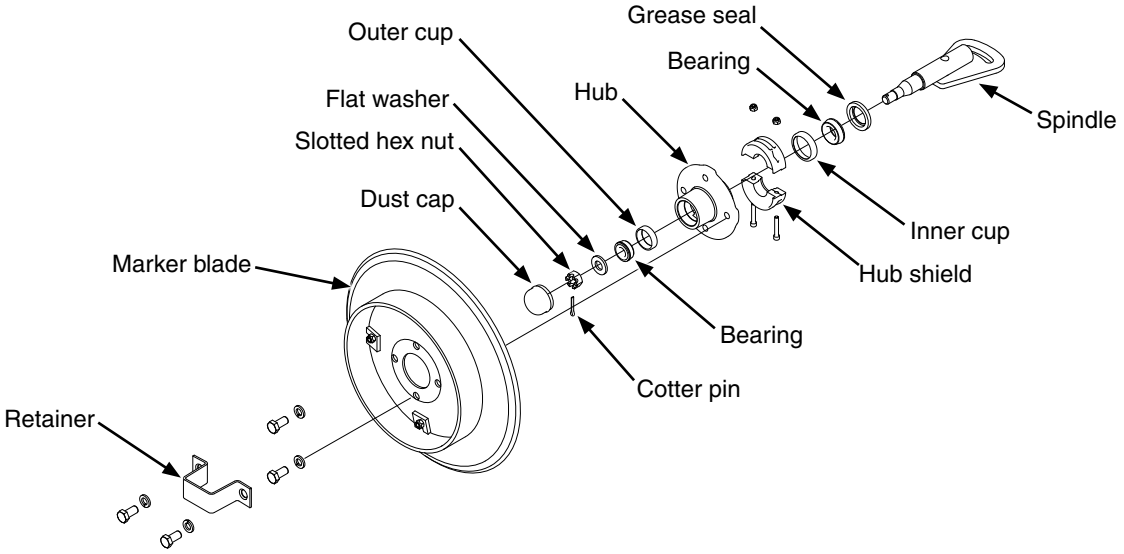

1. Remove retainer and marker blade.
2. Remove dust cap from hub.
2. Remove hub shield. Note direction of installation.
3. Remove cotter pin, slotted hex nut, and washer.
4. Slide hub from spindle.
5. Remove bearings and cups and discard if bearings are being replaced. Clean hub and dry. Remove bearings only and not cups if repacking.
6. Press in new bearing cups with thickest edge facing in. (Bearing replacement procedure only.)
7. Pack bearings with heavy duty wheel bearing grease thoroughly forcing grease between roller cone and bearing cage. Fill the space between the bearing cups in the hub with grease.
8. Install rubber seal into grease seal. Place inner bearing in place and press in new rubber seal/grease seal.
9. Clean spindle and install hub.
10. Install outer bearing, washer and slotted hex nut. Tighten slotted hex nut while rotating hub until there is some drag. This ensures all bearing surfaces are in contact. Back off slotted nut to nearest locking slot and install cotter pin.
11. Fill dust caps approximately ¾ full of wheel bearing grease and install on hub.
12. Install hub shield.
13. Install marker blade and retainer on hub. Tighten hardware evenly.

WARNING

Uncontrolled movement of equipment can cause loss of control and could result in death, serious injury, or damage to property and equipment. Install all safety lockup devices before transporting equipment.

LIFT/GROUND DRIVE WHEEL BEARING REPACK OR REPLACEMENT

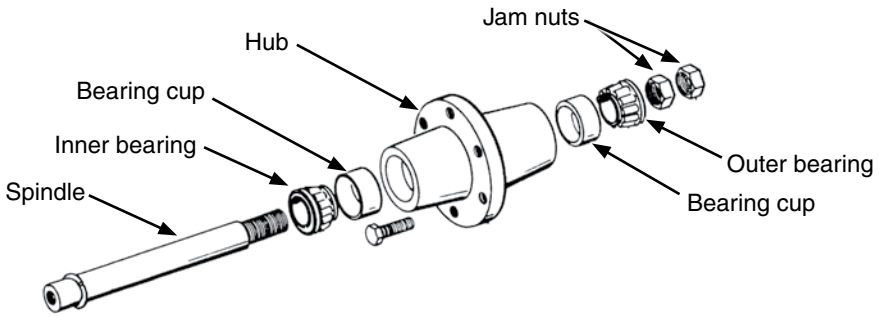

1. Raise tire clear of ground and remove wheel.
2. Remove double jam nuts and slide hub from spindle.
3. Remove bearings and cups and discard if bearings are being replaced. Clean hub and dry. Remove bearings only and not cups if repacking.
4. Press in new bearing cups with thickest edge facing in. (Bearing replacement procedure only.)
5. Pack bearings with heavy duty wheel bearing grease thoroughly forcing grease between roller cone and bearing cage. Fill space between bearing cups and hub with grease.
6. Place inner bearing in place.
7. Clean spindle and install hub.
8. Install outer bearing and jam nut. Tighten jam nut while rotating hub until there is some drag. This ensures all bearing surfaces are in contact. Back off jam nut ¼ turn or until there is only slight drag when rotating hub. Install second jam nut to lock against first.
9. Install wheel on hub. Tighten hardware evenly.

WARNING

Uncontrolled movement of equipment can cause loss of control and could result in death, serious injury, or damage to property and equipment. Install all safety lockup devices before transporting equipment.

TRANSPORT WHEEL BEARING REPLACEMENT

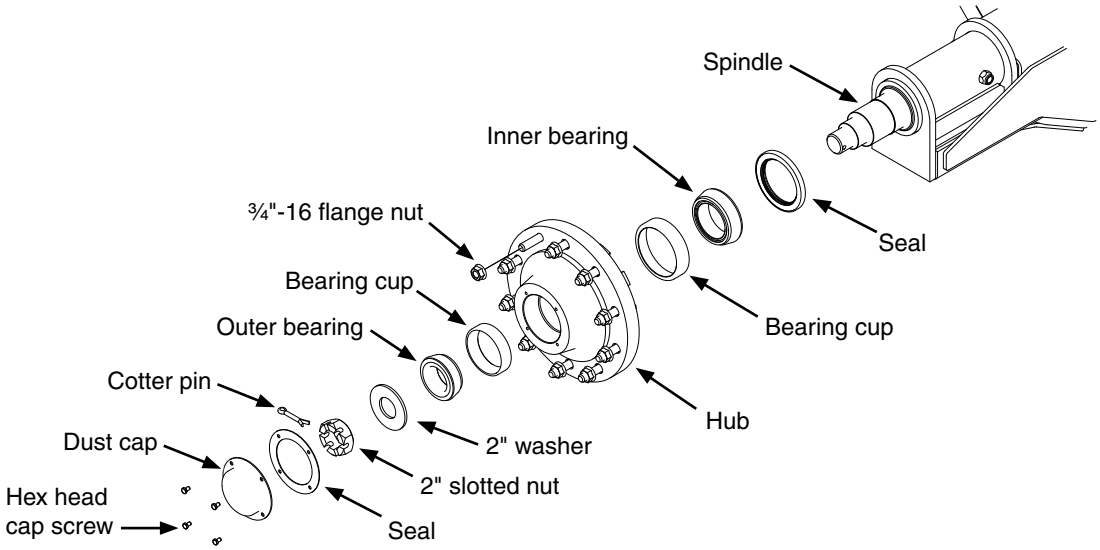

1. Raise tires clear of ground and support with jack stand. Remove wheels.
2. Remove dust cap attachment hardware and cap from wheel hub.
3. Remove cotter pin, slotted nut, and 2" washer.
4. Slide hub from axle spindle. Use a hub puller if necessary.
5. Remove bearings and cups from hub and discard. Thoroughly clean and dry wheel hub.
6. Press in new bearing cups with thickest edges facing in.
7. Pack bearing with heavy-duty wheel bearing grease. Thoroughly force grease between roller cone and bearing cage. Fill space between bearing cups and hub with grease.
8. Place inner bearing in hub and press in new grease seal with lip pointing towards bearing.
9. Clean axle spindle and install hub.
10. Install outer bearing, 2" washer, and slotted nut. Tighten slotted nut while rotating hub until there is some drag. This ensures all bearing surfaces are in contact. Back off slotted nut to nearest locking slot and install cotter pin. Check bearing endplay.
11. Fill dust cap half full of wheel bearing grease and install on hub with four hex head cap screws.
12. Install wheels and remove jack stand. Torque ¾" flange nuts to 280 ft-lb (379.6 N-m).

FERTILIZER CHECK VALVE CLEANING AND REPAIR

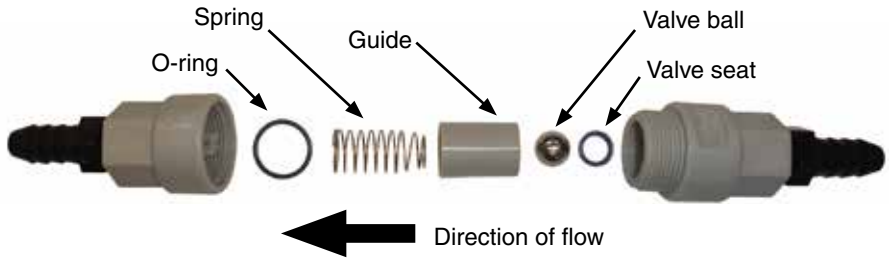

1. Unscrew valve body and separate halves. Note direction and location of parts.
2. Clean and inspect parts. Flush with clean water. Replace damaged parts.
3. Reassemble exactly as shown. O-ring and valve seat must be firmly in place inside each half of valve body.

PISTON PUMP STORAGE

NOTICE

Entrance of air into pump will cause rapid and severe corrosion. KEEP AIR OUT OF PUMP!

NOTE: SUSPENSION FERTILIZER must be flushed from pump for ANY storage period.

1. Flush pump with 5 to 10 gallons (19 to 38 liters) of fresh water and circulate until all corrosive salts are dissolved in pump.
2. Set pump on 10. Draw in a mixture of half diesel fuel and 10 weight oil until discharge is clean. Plug inlet and outlet.

LOW-RATE LIQUID FERTILIZER SYSTEM

Clean strainers daily.

Flush all lines with water for 30 to 60 seconds then drain water before storage.

PNEUMATIC DOWN PRESSURE AIR COMPRESSOR TANK

Moisture should be drained daily from the tank. Tank should be drained completely for storage.

To drain tank, locate drain plug on the bottom of tank. Stand off to the side of tank and pull cable attached to drain.

NOTE: If mositure is not drained from tank rust particles will form inside tank.

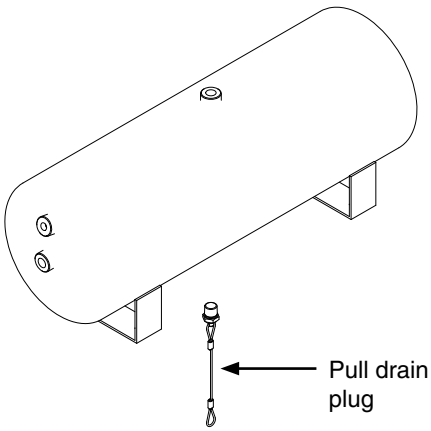

PREPARATION FOR STORAGE

Store planter in a dry sheltered area if possible.

Remove all trash wrapped on sprockets or shafts and remove dirt that can draw and hold moisture.

Clean all drive chains and coat with a rust preventative spray, or remove chains and submerge in oil.

Lubricate planter and row units at all lubrication points.

Inspect planter for parts that in need of replacement and order during “off” season.

Make sure all seed and granular chemical hoppers are empty and clean.

Remove seed discs from seed meters, clean and store meters in a rodent-free, dry area with discs removed. Store seed discs vertically on a dowel or pipe.

Remove vacuum hose from each seed meter. Operate vacuum fan at full hydraulic flow from tractor for two minutes to clear manifolds, hoses and fittings of dust and debris.

Clean breather on analog vacuum and pressure gauges.

Disassemble, clean and grease all U-joint slides.

Grease or paint disc openers/blades and row marker disc blades to prevent rust.

Flush liquid fertilizer tanks, hoses and metering pump with clean water. See “Piston Pump Storage” if applicable.

Empty dry fertilizer hoppers. Clean hoppers. Disassemble and clean metering augers. Reassemble, coating all metal parts with rust preventative.

Bulk Fill System:

- Clean out bulk fill hopper, entrainment assembly, and delivery hoses.
- Disconnect delivery hoses from entrainer ports. Install small orange caps onto ports. Attach hoses to caps.
- Disconnect delivery hoses from air dissipator at each row unit. Install large orange caps. Attach hoses to caps.
- Check all bolts and fasteners used to assemble and attach entrainment device are tight (if applicable).
- Loosen knobs on entrainer cleanout doors to remove pressure from door gaskets.
- Inspect all seed delivery hoses and replace any that are worn, cut, or cracked.

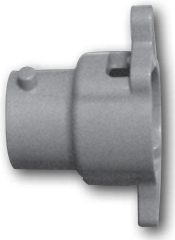

Entrainer cap

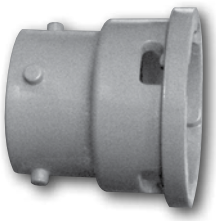

Air dissipator cap

ELECTRICAL WIRING DIAGRAM FOR LIGHT PACKAGE

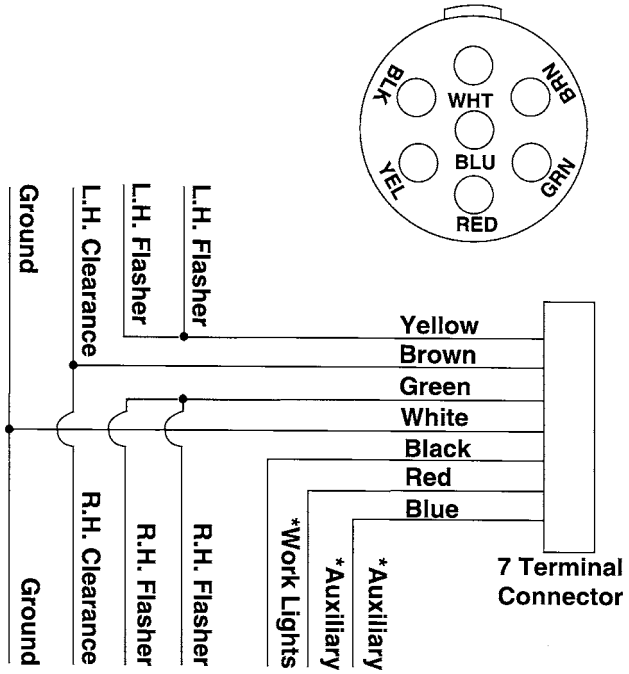

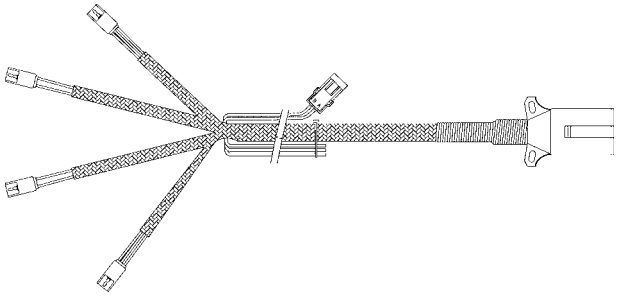

Light packages supplied on Model 3700 Front Folding Planters meet ASABE Standards. Check with tractor manufacturer for correct wiring harness to be wired into lights on your tractor, .

***Optional customer-supplied auxiliary lights and wires may be wired into existing plug terminals.**

ELECTRICAL CONTROL CONSOLE SCHEMATIC

NOTICE

Disconnect control console from tractor battery before doing any electrical work or shorting will damage equipment. Keep wiring harnesses away from high temperature areas or sharp edges. DO NOT route wiring harnesses along battery cables. Use cable ties to keep wire harness away from moving parts on tractor and planter. Ground connections to tractor frame must be clean to provide good electrical contact.

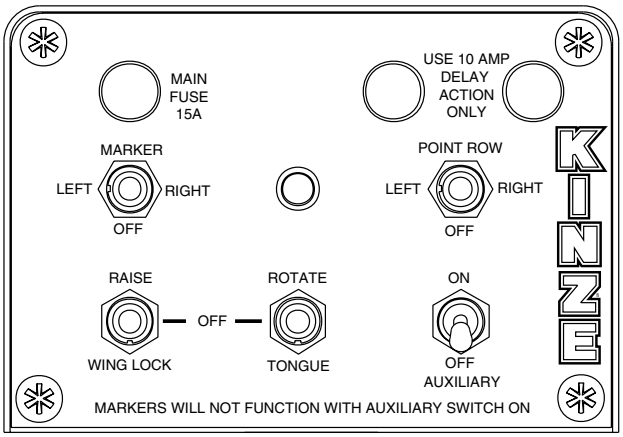

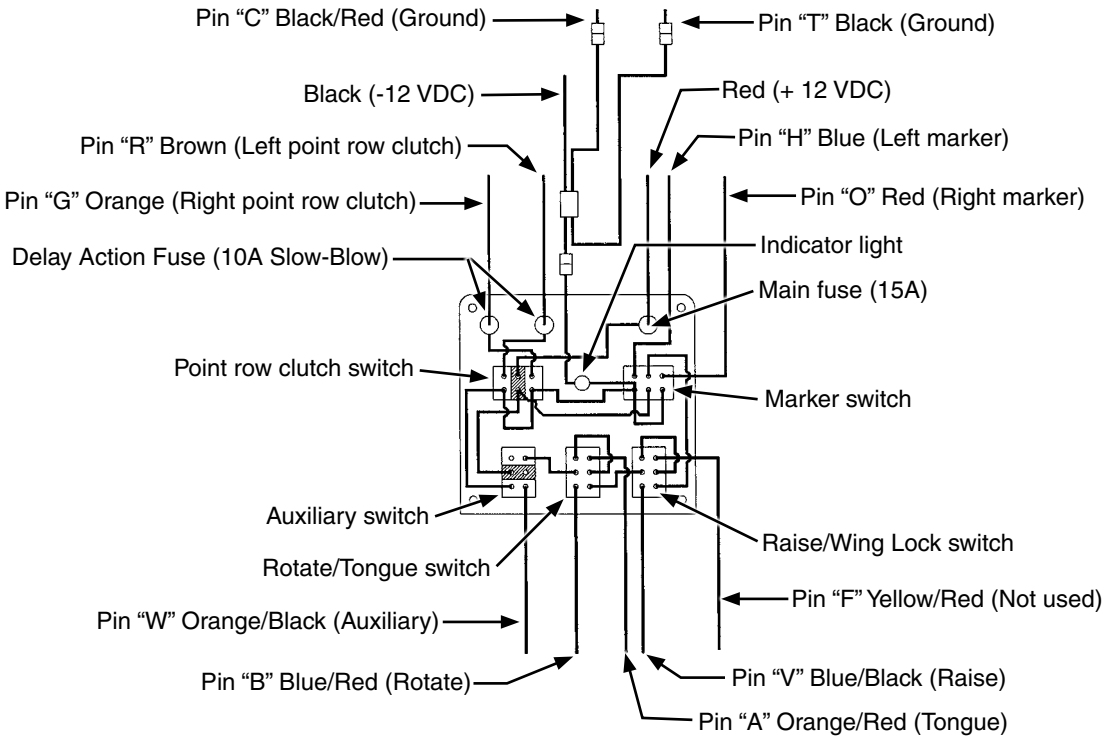

NOTE:

1. **Operating row marker or point row switch in either direction lights panel light.**
2. **Point row clutch switch operates independently from rest of control box.**
3. **Power to row marker switch is fed through auxiliary switch and two transport function switches. Operating any switch in lower row disables row marker function and turns off panel light. (If point row clutch switch is “OFF”.)**
4. **See page 6-41 for two-speed point row clutch electrical control console and wiring harness schematics.**

ELECTRICAL WIRING HARNESS SCHEMATIC (ON TRACTOR)

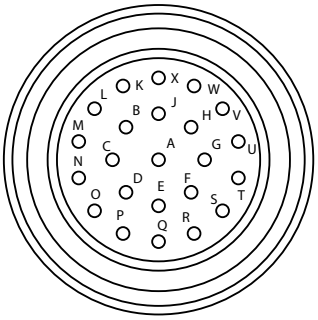

Pin No.	Wire Color	Function	Wire Ga.
A	Orange/Red	Tongue Raise	14
B	Blue/Red	Fold	14
C	Black/Red	Ground	14
D	White	Monitor B 12V	14
E	Green	Monitor B DATA	14
F	Yellow/Red	Wing Lock	14
G	Orange	Point Row - Right	12
H	Blue	Marker - Left	14
J	Black	Monitor B Ground	14
K	White	Monitor A 12V	14
L	Green	Monitor A Data	14
M	Black	Monitor A Ground	14
N	———	———	
O	Red	Marker - Right	14
P	———	———	
Q	———	———	
R	Brown	Point Row - Left	12
S	Yellow	Reduced Rate - Left	12
T	Black	Ground	12
U	Red/Black	Reduced Rate - Right	12
V	Blue/Black	Raise to Transport	14
W	Orange/Black	Auxiliary	14
X	———	———	

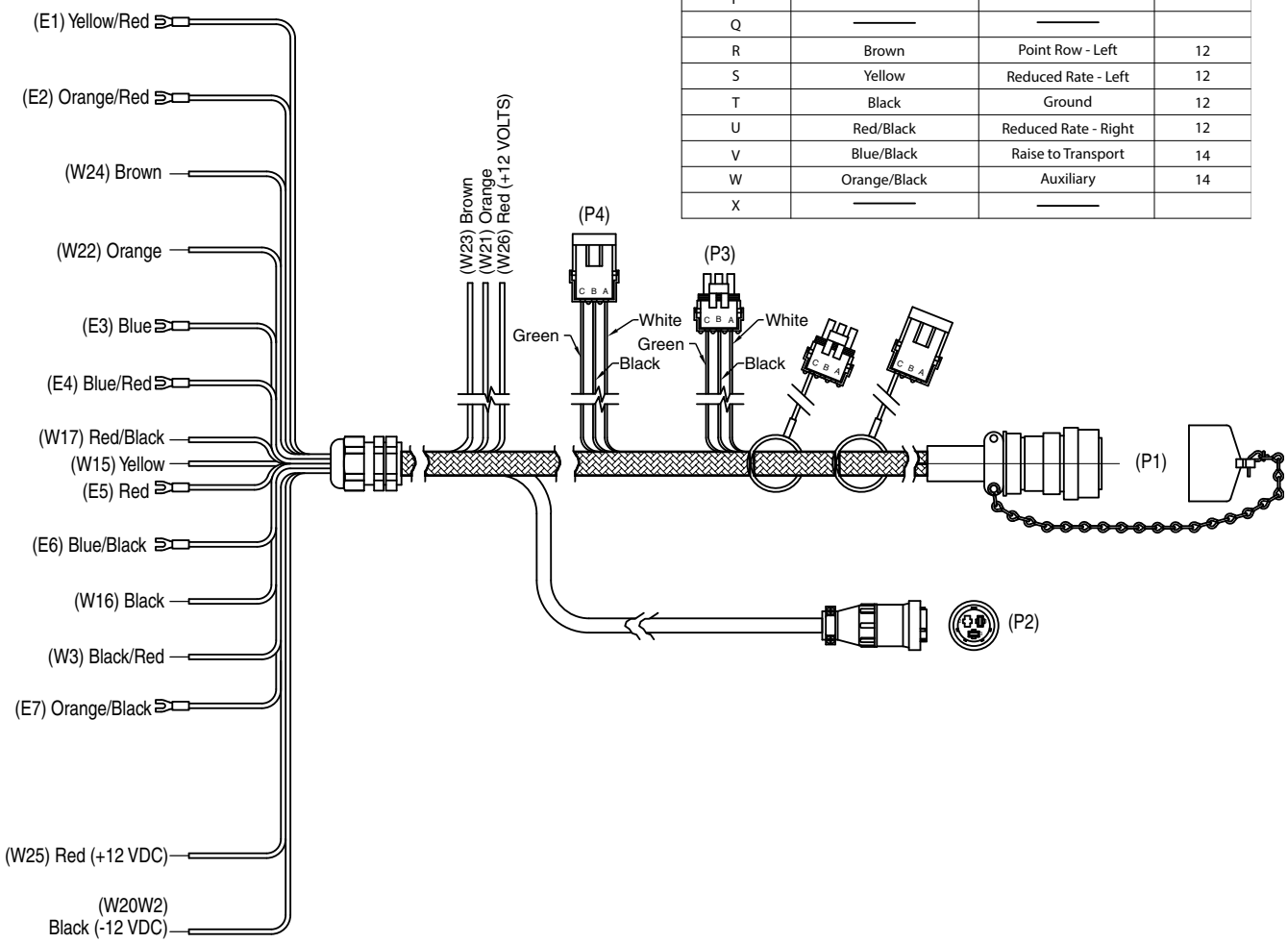

ELECTRICAL WIRING HARNESS SCHEMATIC (ON PLANTER)

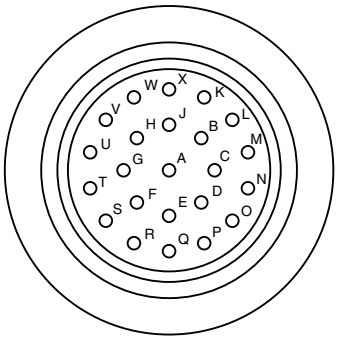

Pin No.	Wire Color	Function	Wire Ga.
A	Orange/Red	Tongue Raise	14
B	Blue/Red	Fold	14
C	Black/Red	Ground	14
D	White	Monitor B 12V	14
E	Green	Monitor B Data	14
F	Yellow/Red	Not Used	14
G	Orange	PT. Row - Right	12
H	Blue	Marker - Left	14
J	Black	Monitor B Ground	14
K	White	Monitor A 12V	14
L	Green	Monitor A Data	14
M	Black	Monitor A Ground	14
N	———	———	
O	Red	Marker - Right	14
P	———	———	
Q	———	———	
R	Brown	PT. Row - Left	12
S	Yellow	Reduced Rate - Left	12
T	Black	Ground	12
U	Red/Black	Reduced Rate - Right	12
V	Blue/Black	Raise to Transport	14
W	Orange/Black	Auxiliary	14
X	———	———	

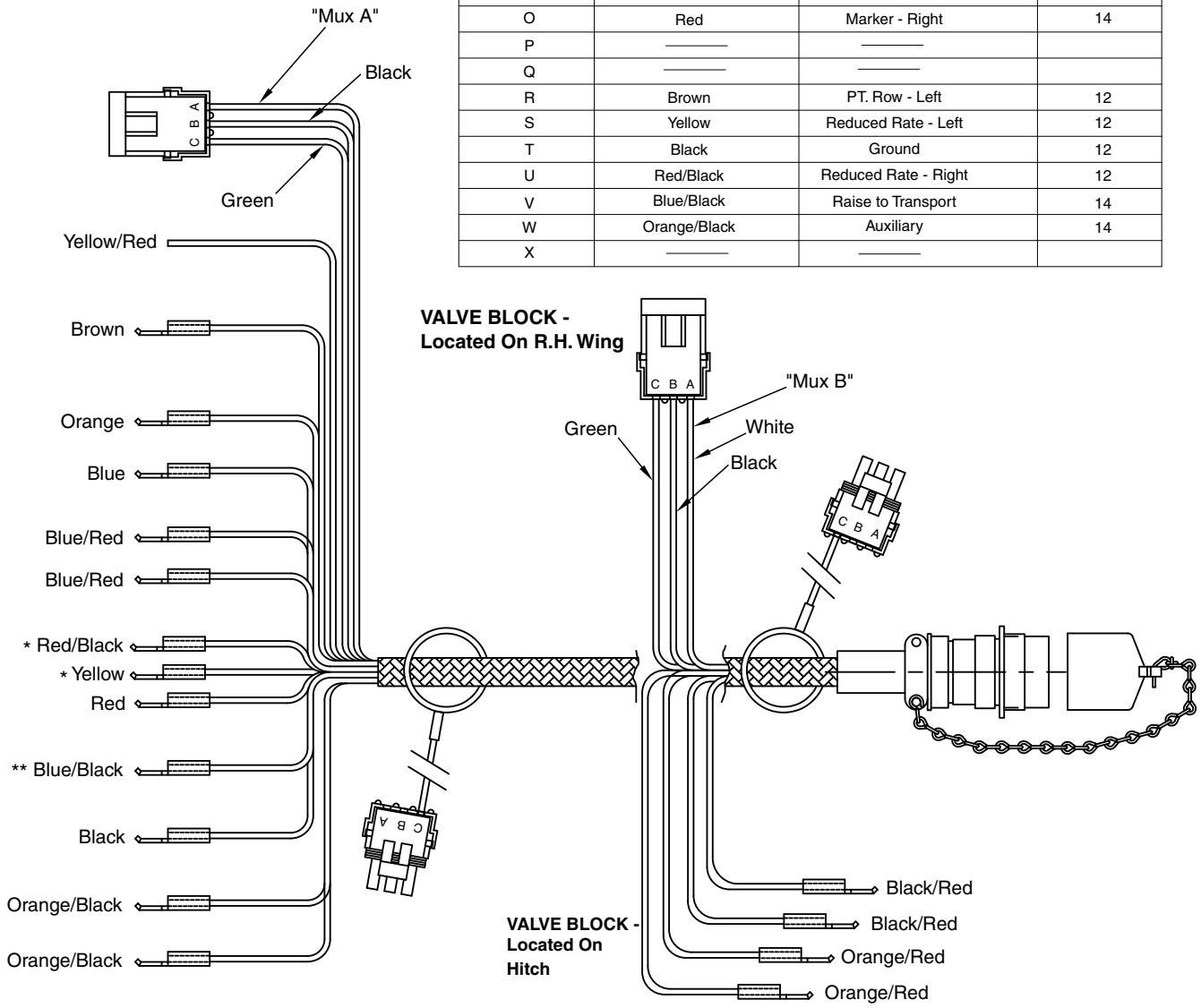

** NOTE: Harness To Port V14 On Valve Block Located On Tower

* See page 6-41 if equipped with optional Two-Speed Point Row Clutch Package.

VALVE BLOCK - LOCATED ON HITCH

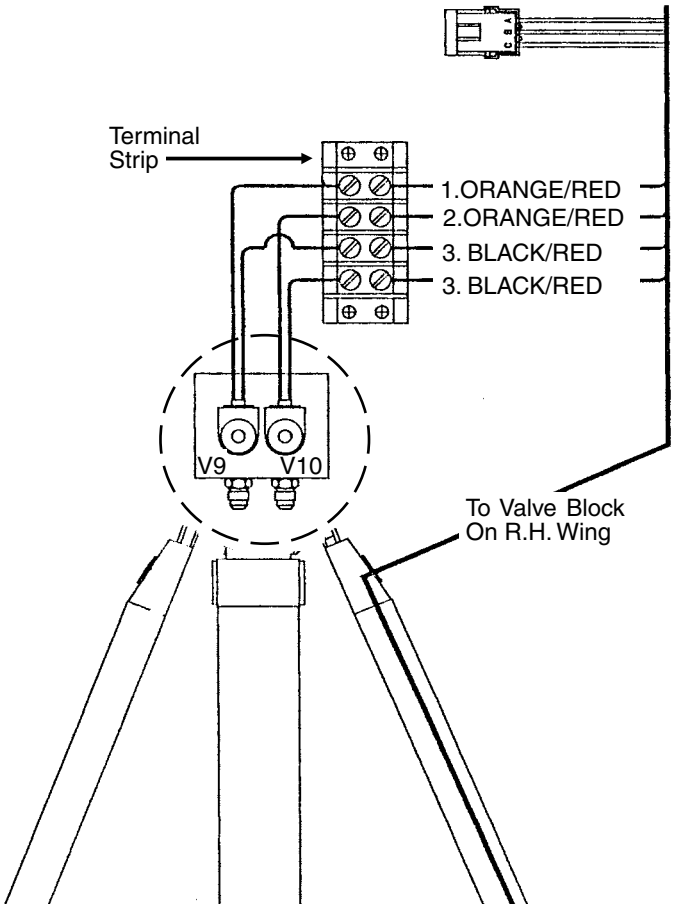

1. ORANGE/RED - Pin “A” (Tongue Retract/Extend) - Port V9
2. ORANGE/RED - Pin “A” (Tongue Retract/Extend) - Port V10
3. BLACK/RED - Pin “C” (Ground)

VALVE BLOCKS - LOCATED ON TOWER AND R.H. WING

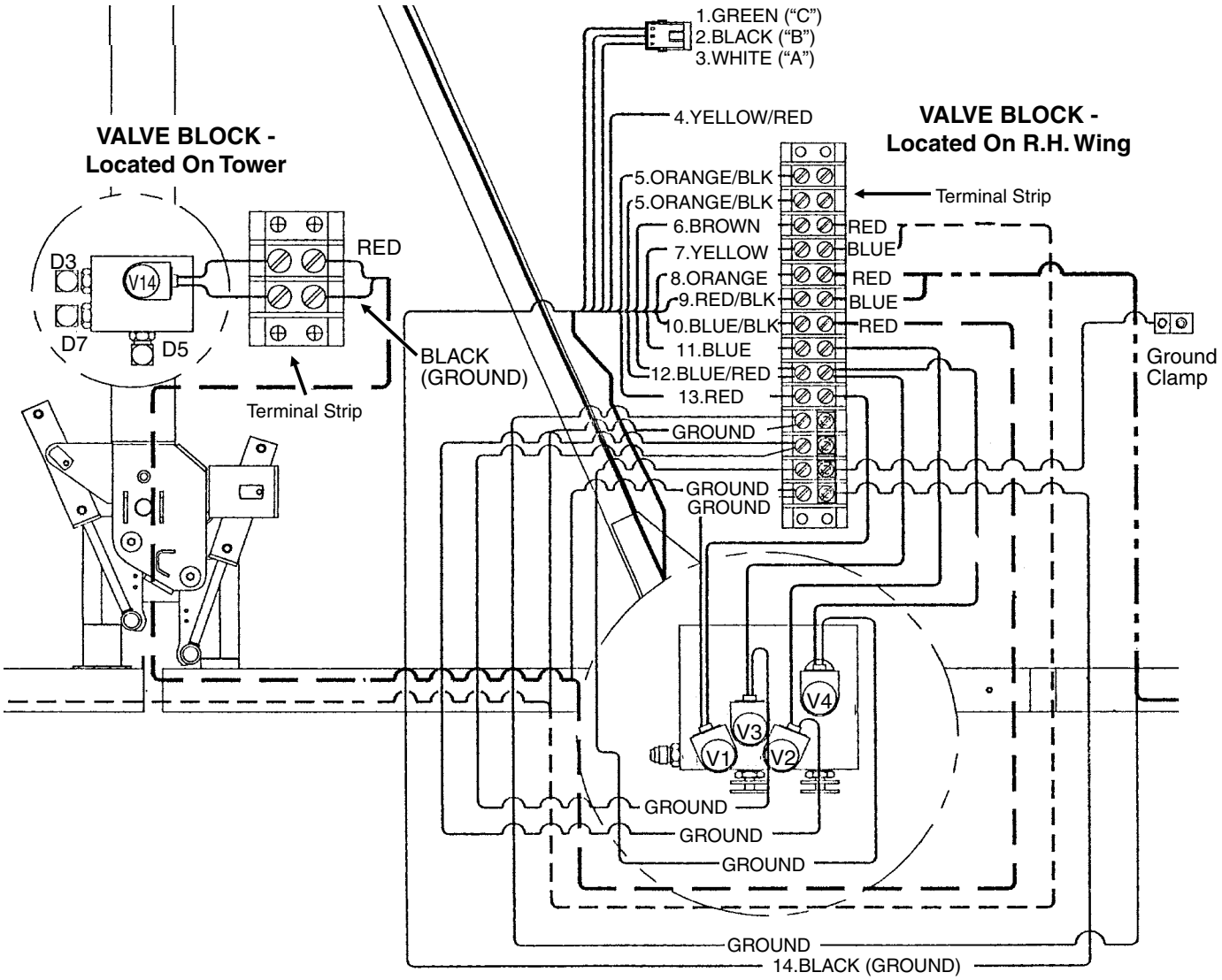

1. GREEN - Pin "L" ("C" MONITOR DATA)
2. BLACK - Pin "M" ("B" MONITOR GROUND)
3. WHITE - Pin "K" ("A" MONITOR +12V)
4. YELLOW/RED - Pin "F" (NOT USED)
5. ORANGE/BLACK - Pin "W" (Auxiliary)
6. BROWN - Pin "R" (L.H. Point Row Clutch)
7. YELLOW - Pin "S" (L.H. Two-Speed Clutch)*
8. ORANGE - Pin "G" (R.H. Point Row Clutch)
9. RED/BLACK - Pin "U" (R.H. Two-Speed Clutch)*
10. BLUE/BLACK - Pin "V" (Raise)
11. BLUE - Pin "H" (L.H. Marker) - Port V2
12. BLUE/RED - Pin "B" (Rotate) - Ports V3 And V4
13. RED - Pin "O" (R.H. Marker) - Port V1
14. BLACK - Pin "T" (Ground)

* See page 6-41 if equipped with optional Two-Speed Point Row Clutch Package.

CONTROL CONSOLE SCHEMATIC (OPTIONAL TWO-SPEED POINT ROW CLUTCHES)

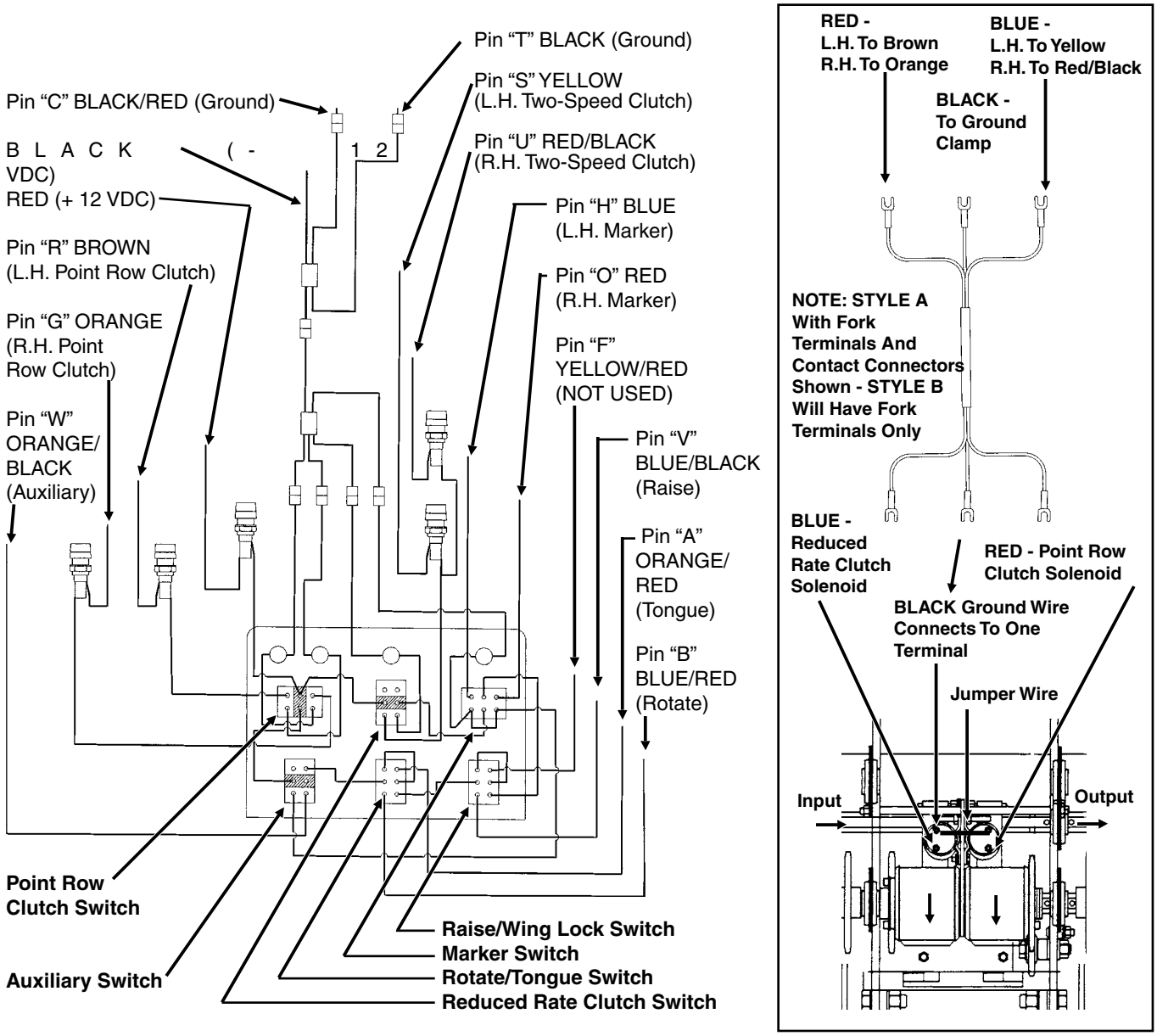

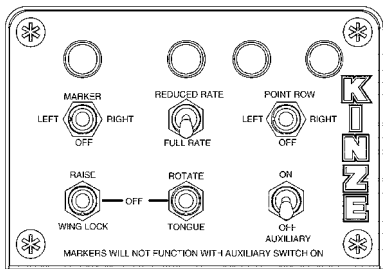

NOTICE

Disconnect control console from tractor battery before doing any electrical work or shorting will damage equipment. Keep wiring harnesses away from high temperature areas or sharp edges. DO NOT route wiring harnesses along battery cables. Use cable ties to keep wire harness away from moving parts on tractor and planter. Ground connections to tractor frame must be clean to provide good electrical contact.

NOTE:

1. Point row and reduced rate clutch switches operate independently from rest of control console.
2. Power to marker switch is fed through auxiliary switch and two transport function switches. Operating any switch in lower row disables marker function and turns off panel light for markers.

ELECTRICAL WIRING HARNESS SCHEMATIC (VACUUM FAN CONTROL)

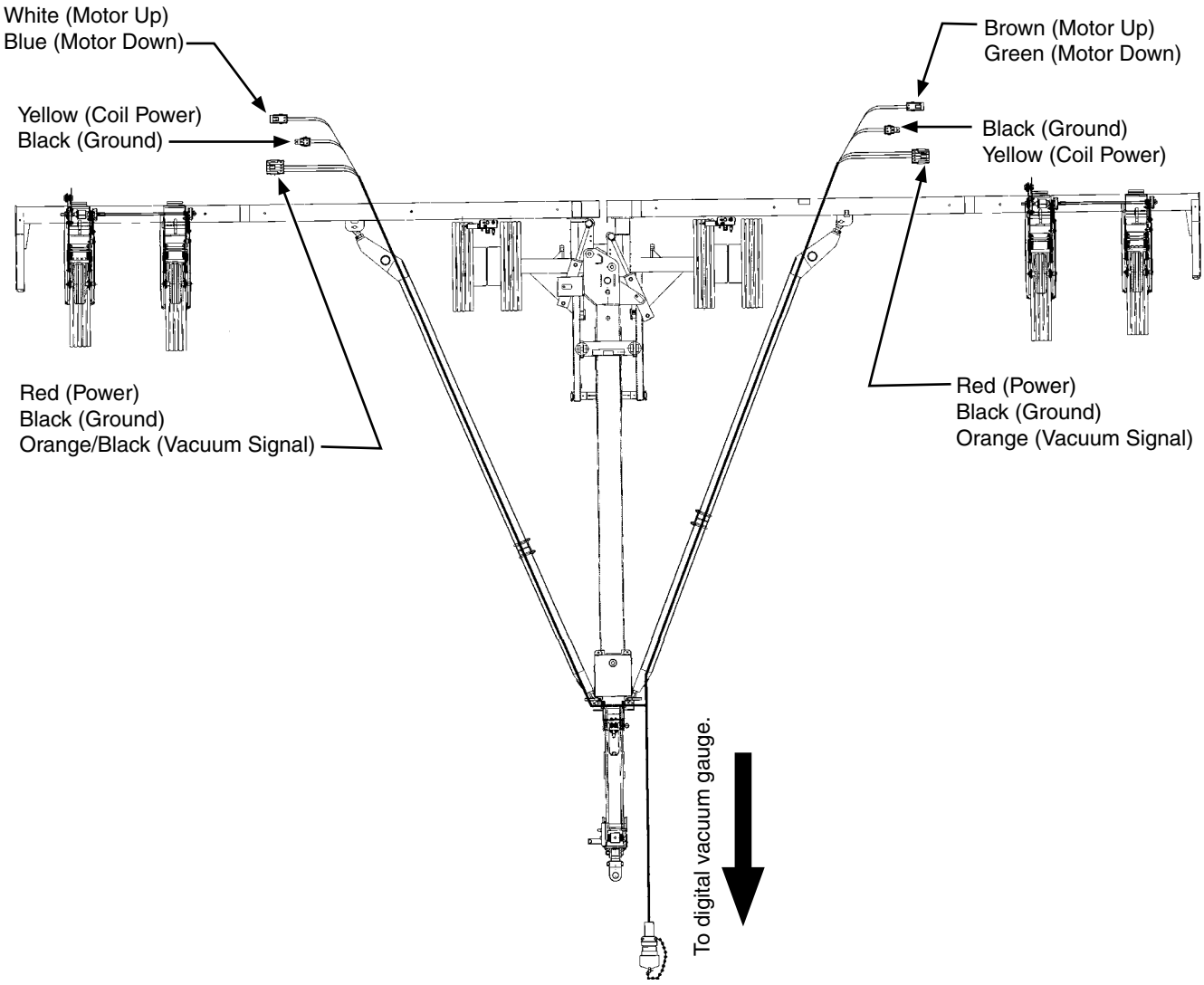

HYDRAULIC HOSE LIFE

WARNING

Pressurized hydraulic fluid can penetrate body tissue and result in death, serious infection, or other injuries. Fluid injected under skin must be IMMEDIATELY removed by a surgeon familiar with this type of injury. Make sure connections are tight and hoses and fittings are not damaged before applying system pressure. Leaks can be invisible. Keep away from suspected leaks. Relieve pressure before searching for leaks or performing any system maintenance.

Proper storage of hydraulic hoses can significantly increase the life of the hoses, for a period of three to five years. After this period, service life of hoses may decrease, depending on variables such as variances in rubber materials and storage environment. Refer to the guidelines below for best practices when storing.

- Store in a clean, cool and dry area
- Avoid direct sunlight or moisture
- Do not store near high power electrical equipment
- Avoid contact with corrosive chemicals
- Avoid ultraviolet light
- Avoid areas with obvious signs of insects or rodents

Unusually long periods of storage or poor storage environment may lead to performance issues or premature failure. Always inspect all hoses prior to use for extensive wear, cuts, or holes. If such flaws are identified, replace immediately to avoid potential failure, property damage or bodily injury.

HYDRAULIC SCHEMATIC (BULK FILL SYSTEM)

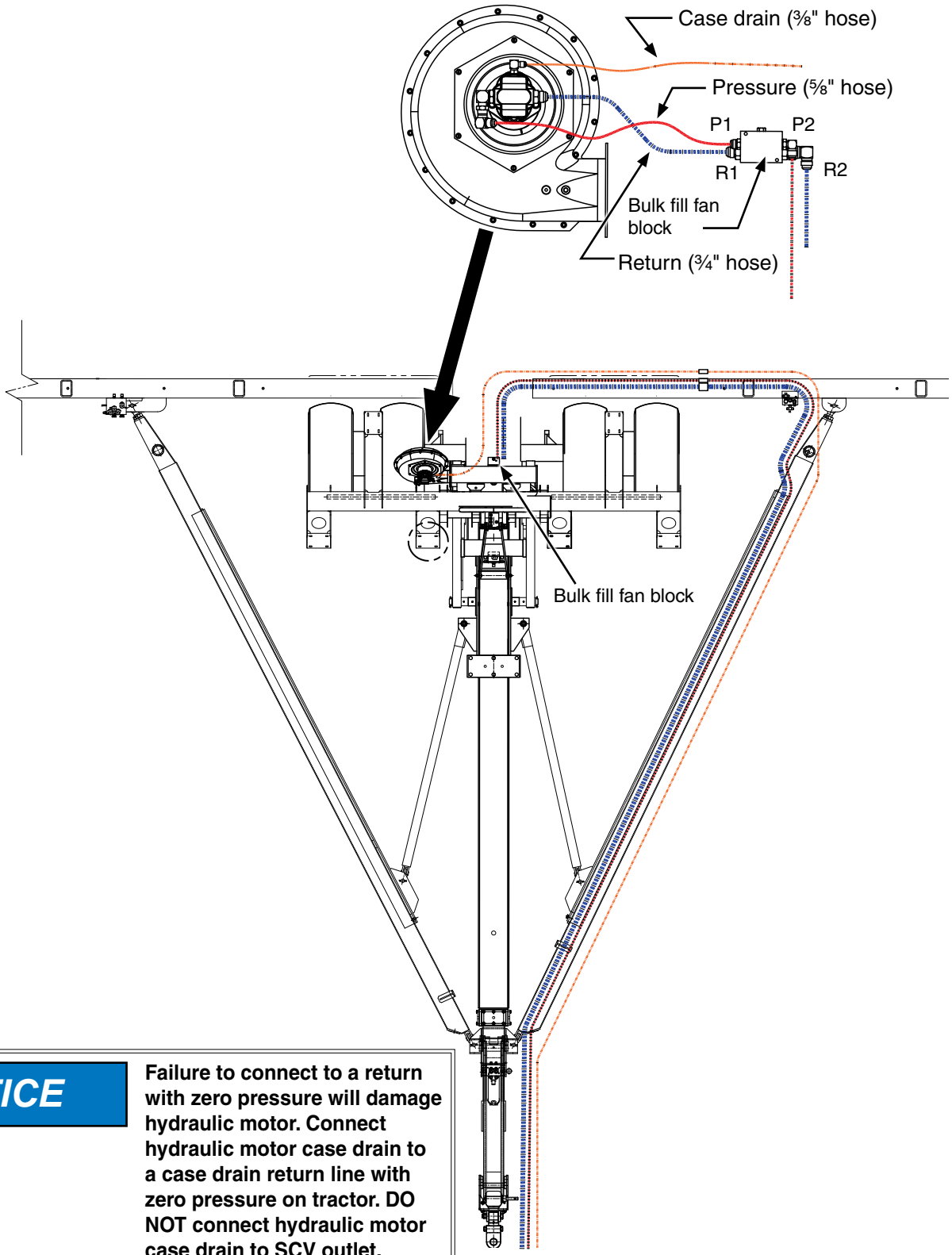

NOTICE

Failure to connect to a return with zero pressure will damage hydraulic motor. Connect hydraulic motor case drain to a case drain return line with zero pressure on tractor. DO NOT connect hydraulic motor case drain to SCV outlet. Contact tractor manufacturer for specific details on "zero pressure return".

HYDRAULIC SCHEMATIC (VACUUM FAN SYSTEM) 24 ROW 30"

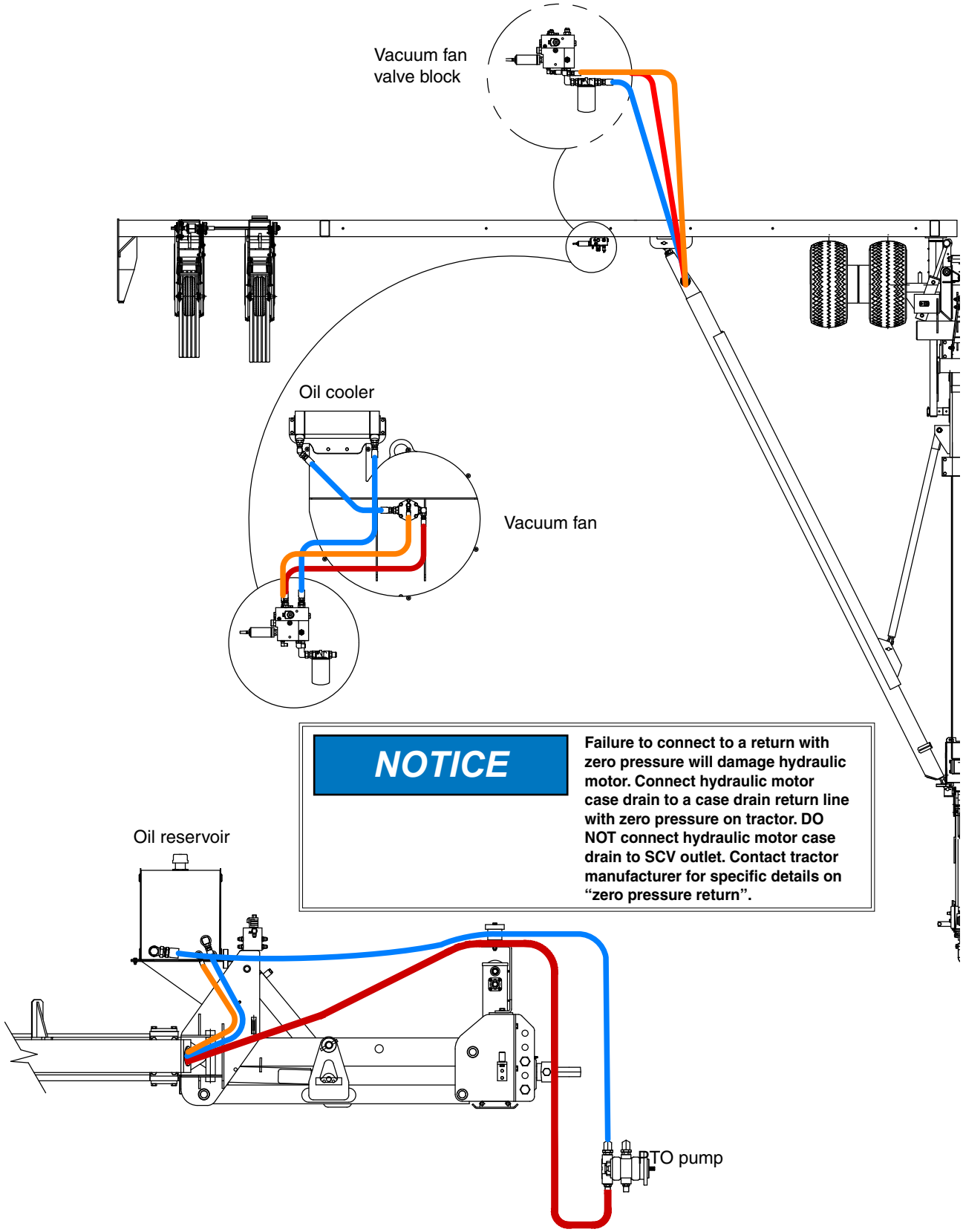

NOTICE

Failure to connect to a return with zero pressure will damage hydraulic motor. Connect hydraulic motor case drain to a case drain return line with zero pressure on tractor. DO NOT connect hydraulic motor case drain to SCV outlet. Contact tractor manufacturer for specific details on "zero pressure return".

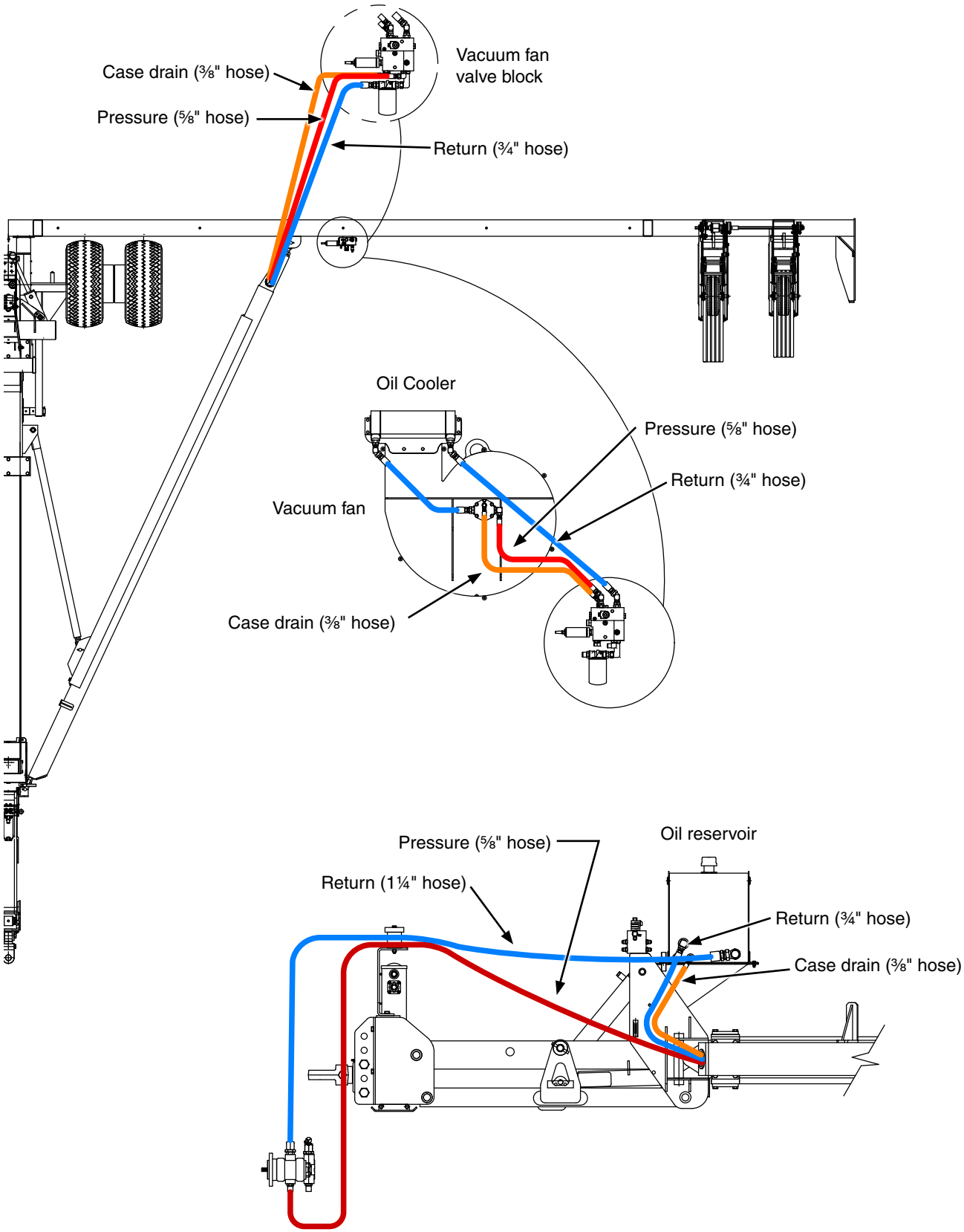
Case drain (⅜" hose)
Pressure (⅝" hose)
Vacuum fan valve block
Return (¾" hose)
Oil Cooler
Pressure (⅝" hose)
Return (¾" hose)
Vacuum fan
Case drain (⅜" hose)
Pressure (⅝" hose)
Oil reservoir
Return (1¼" hose)
Return (¾" hose)
Case drain (⅜" hose)

HYDRAULIC SCHEMATIC (VACUUM FAN SYSTEM) 24 ROW 20"/22"

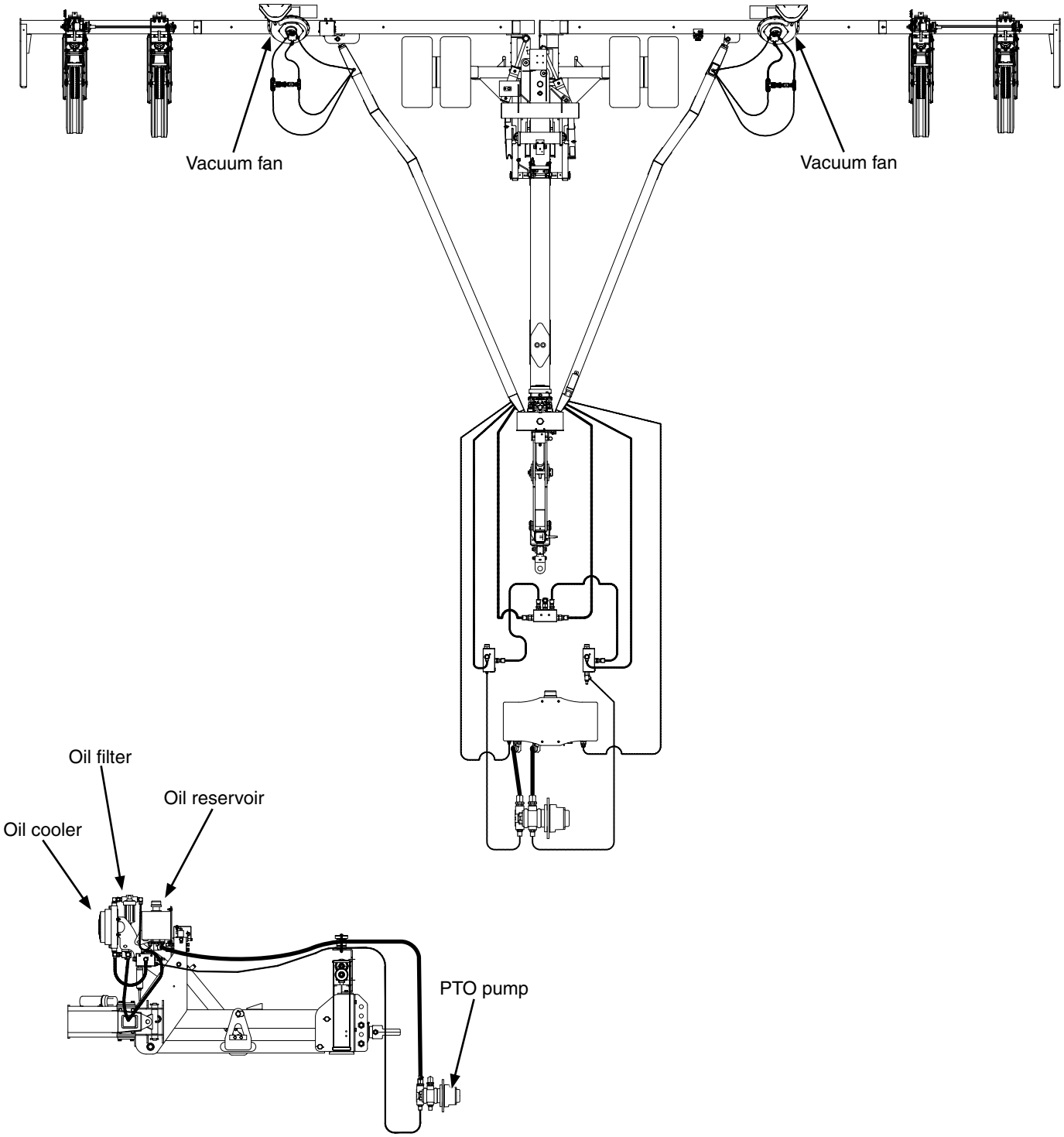

This page intentionally left blank.

HYDRAULIC SYSTEM SCHEMATIC (24 ROW 20"/22"/30")

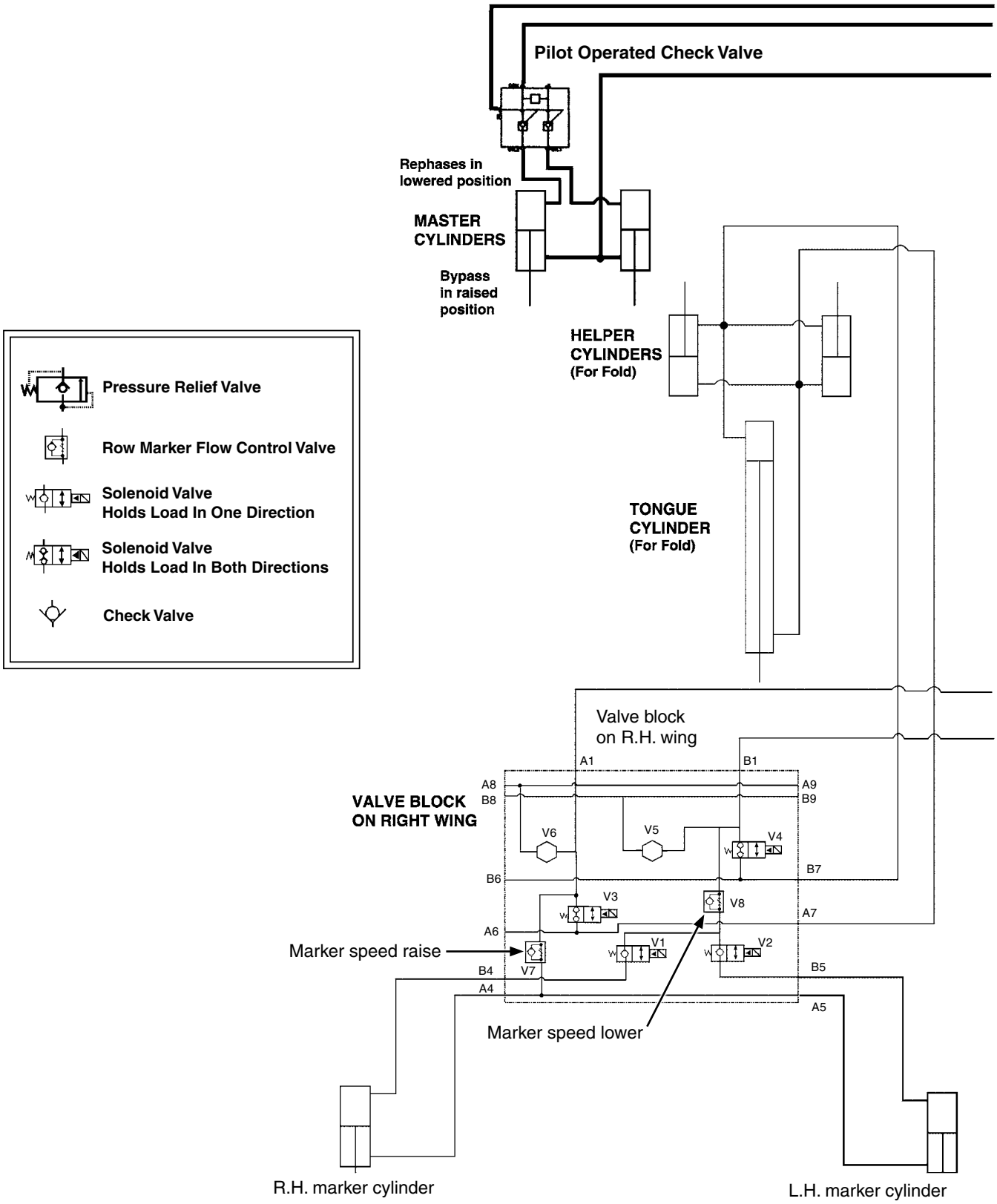

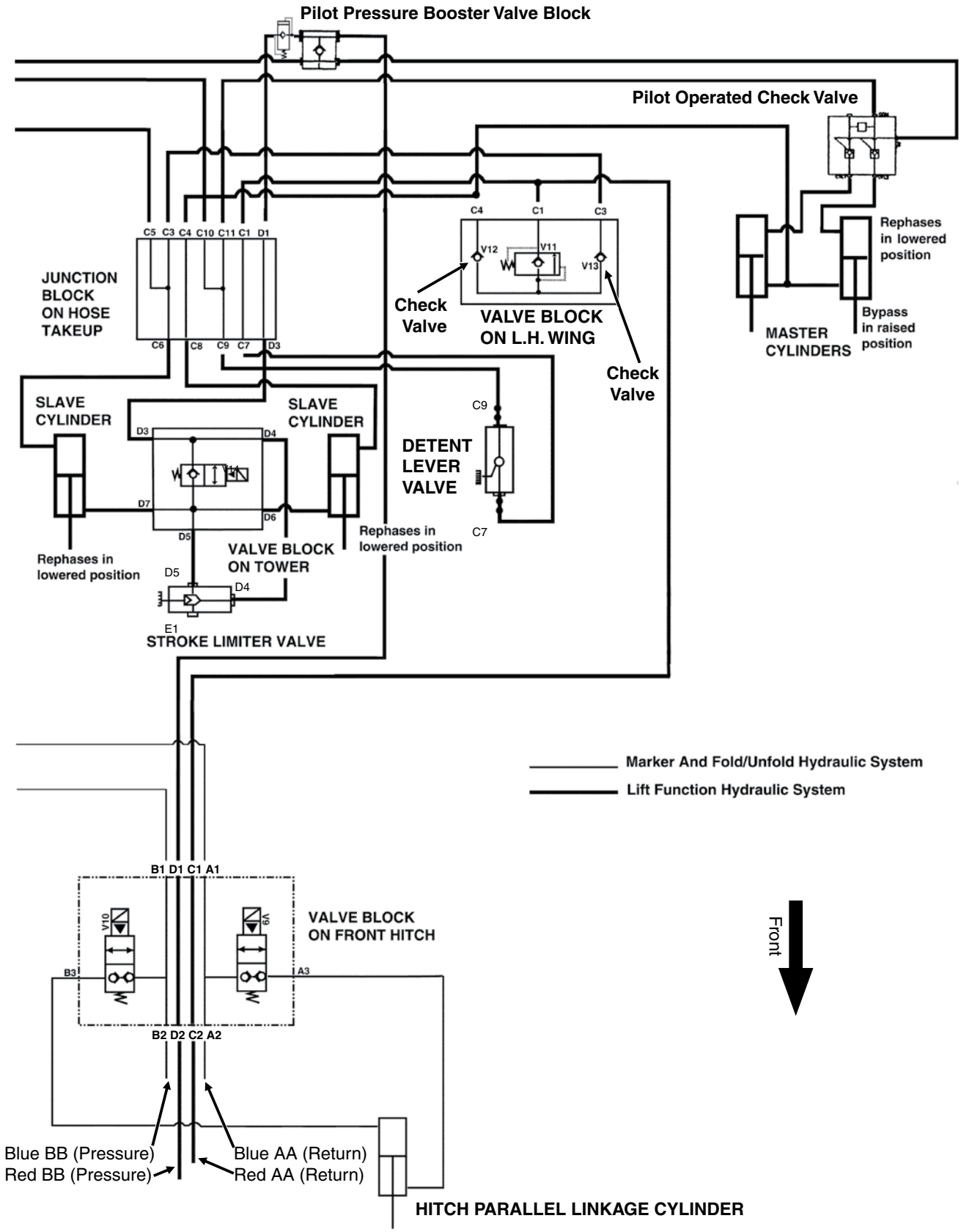
Pilot Pressure Booster Valve Block
Pilot Operated Check Valve
C5 C3 C4 C10 C11 C1 D1
JUNCTION BLOCK ON HOSE TAKEUP
C6 C8 C9 C7 D3
C4 C1 C3
V12 V11 V13
Check Valve
VALVE BLOCK ON L.H. WING
Check Valve
Rephases in lowered position
Bypass in raised position
MASTER CYLINDERS
SLAVE CYLINDER
SLAVE CYLINDER
D3 D4
D7 D6
D5
C9
DETENT LEVER VALVE
C7
Rephases in lowered position
Rephases in lowered position
VALVE BLOCK ON TOWER
D5
D4
E1
STROKE LIMITER VALVE
Marker And Fold/Unfold Hydraulic System
Lift Function Hydraulic System
B1 D1 C1 A1
V10
V9
VALVE BLOCK ON FRONT HITCH
B3
A3
B2 D2 C2 A2
Front
Blue BB (Pressure)
Red BB (Pressure)
Blue AA (Return)
Red AA (Return)
HITCH PARALLEL LINKAGE CYLINDER

HYDRAULIC SYSTEM SCHEMATIC (36 ROW 20")

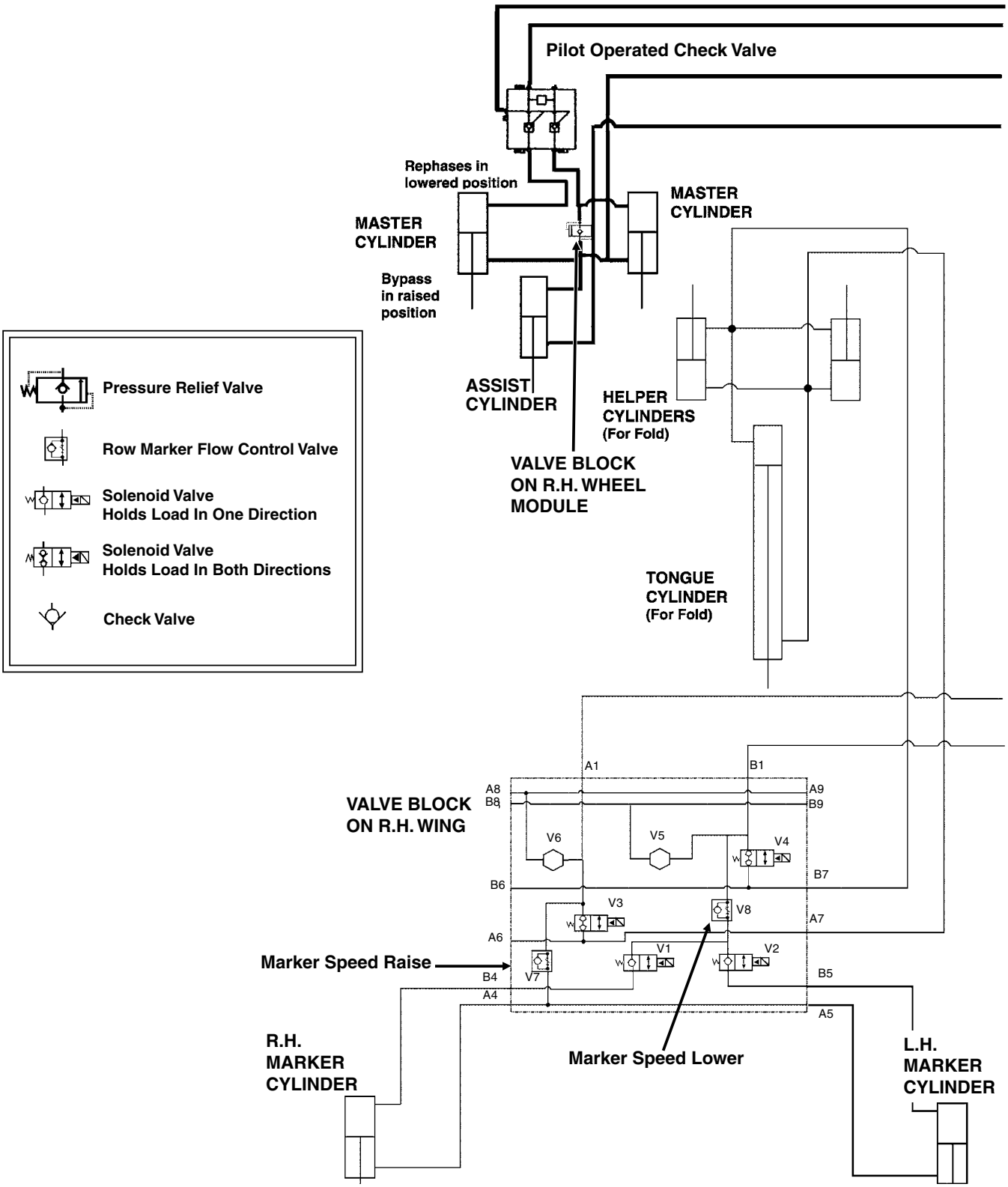

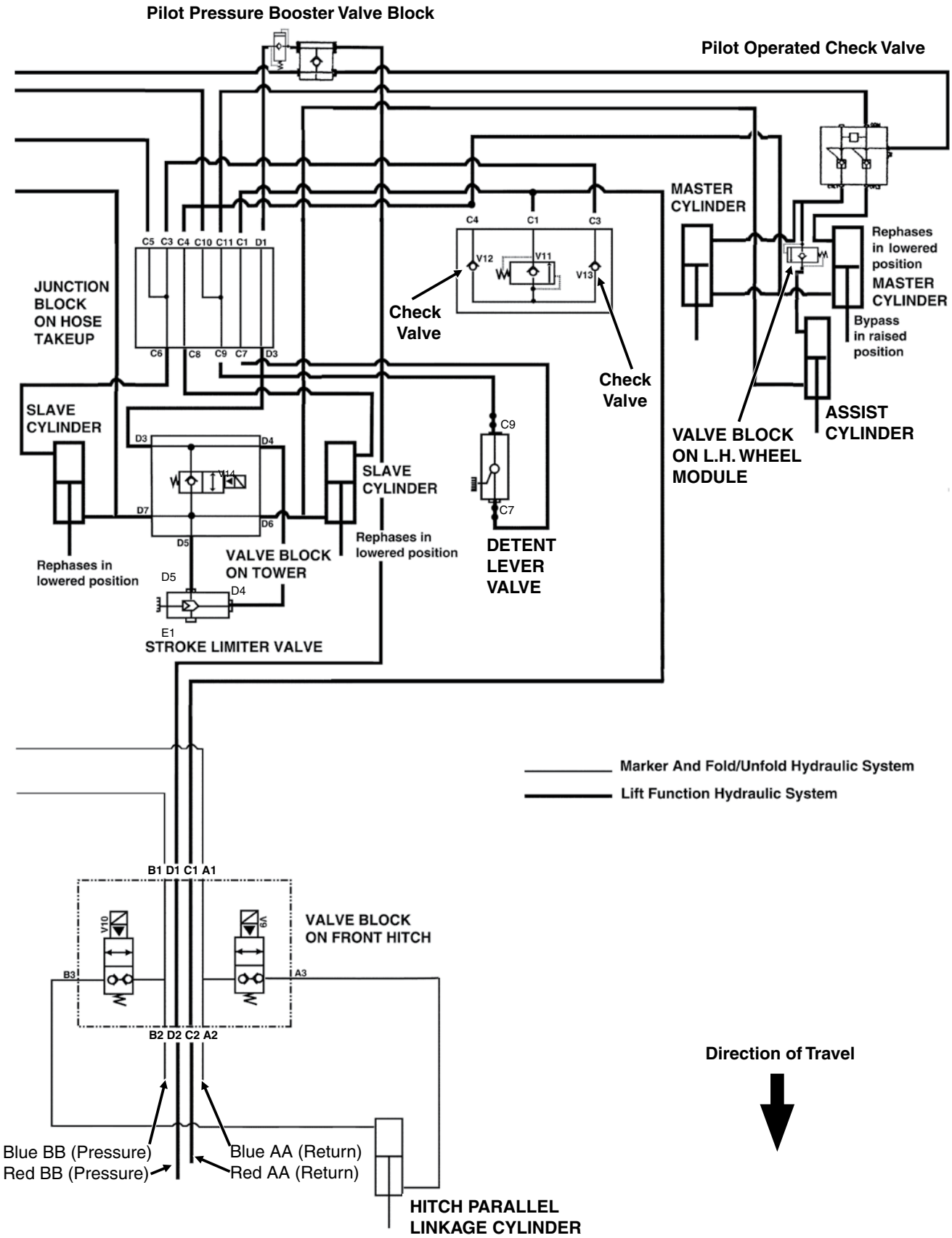
Pilot Pressure Booster Valve Block
Pilot Operated Check Valve
MASTER CYLINDER
Rephases in lowered position
MASTER CYLINDER
Bypass in raised position
JUNCTION BLOCK ON HOSE TAKEUP
C5 C3 C4 C10 C11 C1 D1
C6 C8 C9 C7 D3
C4 C1 C3
V12 V11 V13
Check Valve
Check Valve
SLAVE CYLINDER
D3 D4
V14
D7 D6
D5
SLAVE CYLINDER
C9
C7
VALVE BLOCK ON L.H. WHEEL MODULE
ASSIST CYLINDER
Rephases in lowered position
VALVE BLOCK ON TOWER
Rephases in lowered position
DETENT LEVER VALVE
D5
D4
E1
STROKE LIMITER VALVE
Marker And Fold/Unfold Hydraulic System
Lift Function Hydraulic System
B1 D1 C1 A1
V10
V9
VALVE BLOCK ON FRONT HITCH
B3
A3
B2 D2 C2 A2
Direction of Travel
Blue BB (Pressure)
Red BB (Pressure)
Blue AA (Return)
Red AA (Return)
HITCH PARALLEL LINKAGE CYLINDER

HYDRAULIC VALVE BLOCK LOCATIONS

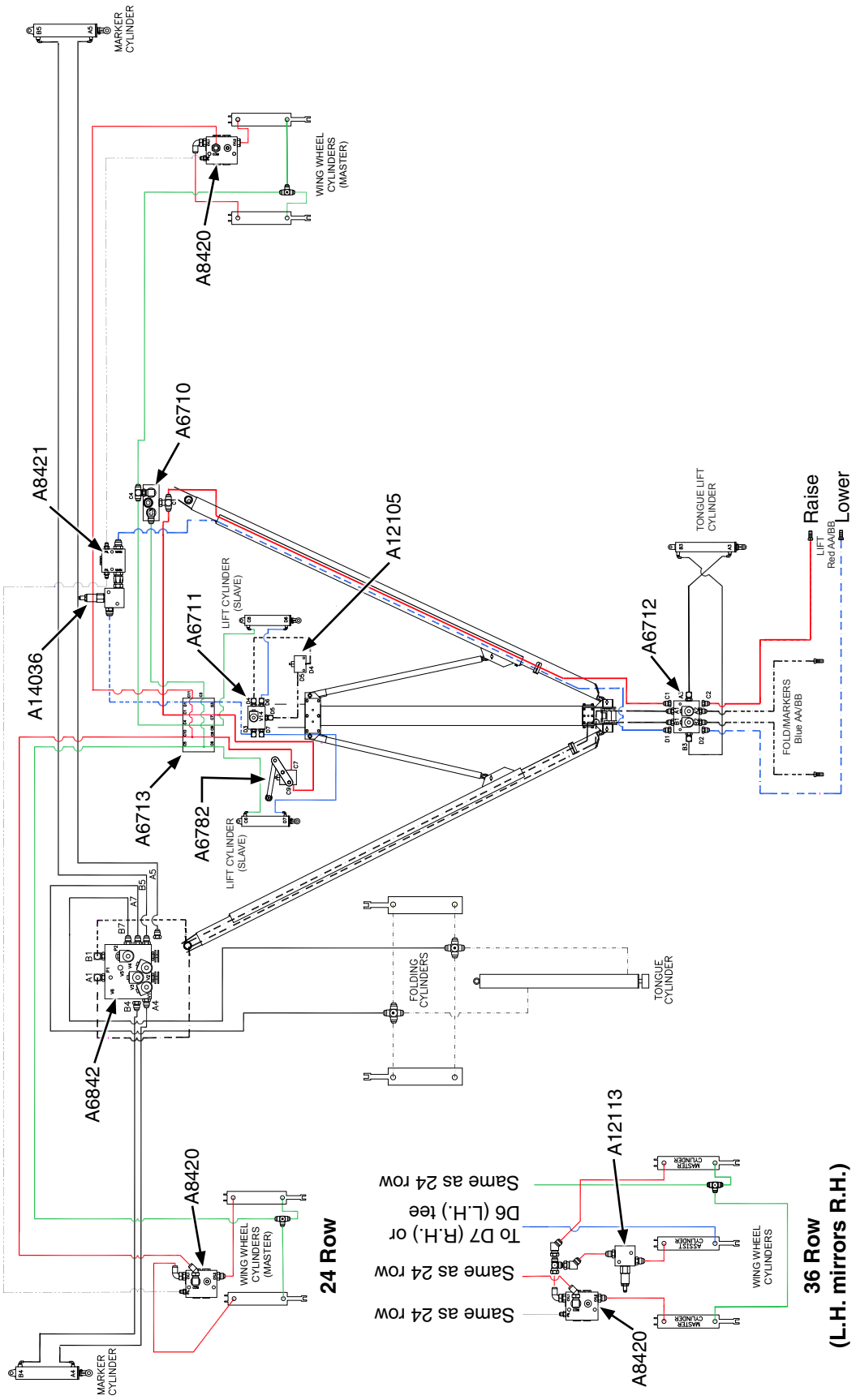

HYDRAULIC VALVE BLOCK FUNCTIONS

Valve Assembly	Name	Function
A6710	Valve block on L.H. wing	1500 psi relief valve. Allows lower from transport.
A6711	Valve block on tower	Oil enters D3 and flows past V14 to rod end of slave cylinders when lowering planter. Oil from rod side of slave cylinders goes in D6 and D7 when raising planter. V14 is closed so oil goes out D5 to height stop plunger and comes back in on D4 to tractor. Oil flows directly to tractor when V14 is energized and allows planter to raise to transport height.
A6712	Valve block on front hitch	Controls tongue lift cylinder and routes hydraulic hoses to left and right side drag links.
A6713	Junction block on hose take-up	Planter lift circuit juction block. Routes hydraulic flow to all planter lift related valves.
A6782	Detent Lever Valve	Blocks oil from exiting wing cylinders when lowering until center of planter reaches a predetermined height (level toolbars) and then is mechanically opened.
A6842	Valve block on R.H. wing	Controls markers and marker speed. Routes hydraulic flow to tongue and fold cylinders.
A8420	Pilot Operated Check Valve	Traps oil in butt ends of wing cylinders until pilot pressure from A8421 opens check valves and allows cylinders to retract.
A8421	Valve block on L.H. wing	Opens pilot operated check valves in A8420 when lowering.
A12105	Stroke Limiter Valve	Shuts off hydraulic flow to set field turn height.
A12113	Valve block on L.H. and R.H. wheel module (36 row 20 only)	Blocks flow from port 2 to 1 until pressure exceeds valve set pressure (1000 psi). Allows free reverse flow from 1 to 2 if pressure at 1 is at least 10 psi greater than pressure at 2.
A14036	Pilot Pressure Booster Valve Block	Located on inboard side of A8421 to create 1000 psi pressure on pilot lines to ensure wing wheels lower together.

ELECTRIC CLUTCH SCHEMATIC

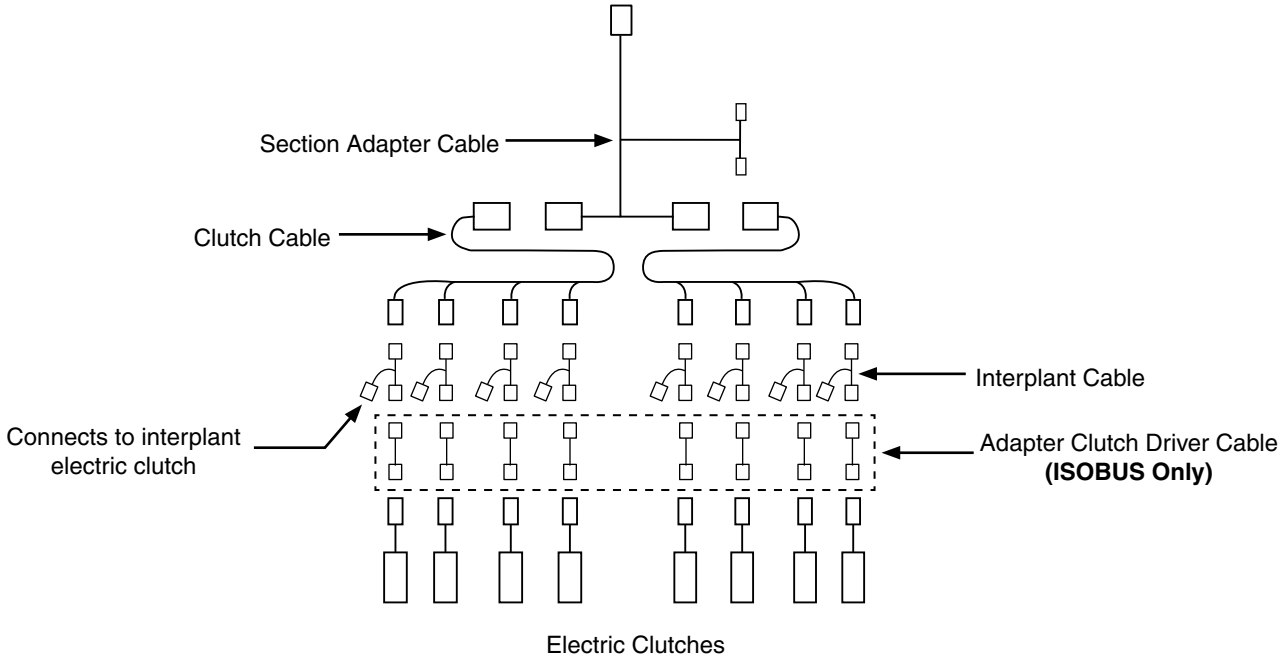

ISOBUS CABLE RATE CONTROL

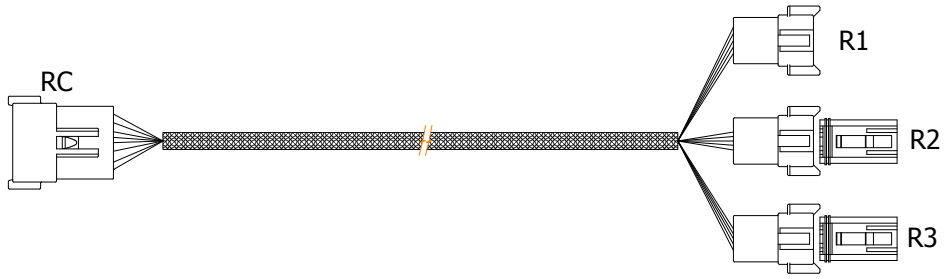

Signal	RC	Wire/Color	R1	R2	R3
Load Power	1	Red	1	1	1
Load Ground	2	Black	4	4	4
PWM 1 Power	3	Red/Green	-	-	-
PWM 1 Ground	47	Black/Green	-	-	-
PWM 2 Power	52	Red/Yellow	-	-	-
PWM 2 Ground	67	Black/Yellow	-	-	-
PWM 3 Power	72	Red/Blue	-	-	-
PWM 3 Ground	87	Black/Blue	-	-	-
Meter Speed 1	93	Green	-	-	-
Meter Speed 2	10	Green	-	3	-
Meter Speed 3	11	Green/Red	-	-	3

ISOBUS IMPLEMENT CABLE

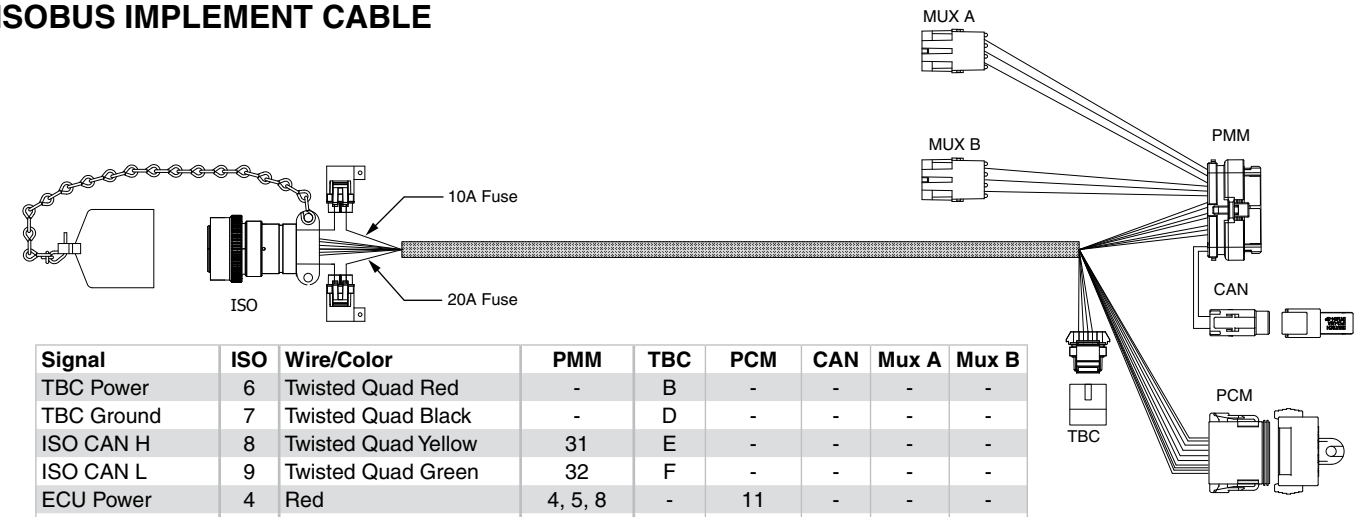

Signal	ISO	Wire/Color	PMM	TBC	PCM	CAN	Mux A	Mux B
TBC Power	6	Twisted Quad Red	-	B	-	-	-	-
TBC Ground	7	Twisted Quad Black	-	D	-	-	-	-
ISO CAN H	8	Twisted Quad Yellow	31	E	-	-	-	-
ISO CAN L	9	Twisted Quad Green	32	F	-	-	-	-
ECU Power	4	Red	4, 5, 8	-	11	-	-	-
ECU Ground	2	Black	14, 15	-	12	-	-	-
LOAD Power	3	Red	-	-	1, 2, 3, 4	-	-	-
LOAD Ground	1	Black	-	-	5, 6, 7, 8	-	-	-
MUX A Power	-	Jacketed 3-Cond White	12	-	-	-	A	-
MUX A Ground	-	Jacketed 3-Cond Black	3	-	-	-	B	-
MUX A Signal	-	Jacketed 3-Cond Green	28	-	-	-	C	-
PROP CAN H	-	Twisted Pair Yellow	34	-	-	1	-	-
PROP CAN L	-	Twisted Pair Green	35	-	-	2	-	-
MUX B Power	-	Jacketed 3-Cond White	23	-	-	-	-	A
MUX B Ground	-	Jacketed 3-Cond Black	26	-	-	-	-	B
MUX B Signal	-	Jacketed 3-Cond Green	7	-	-	-	-	C

ISOBUS CAN JUMPER CABLE

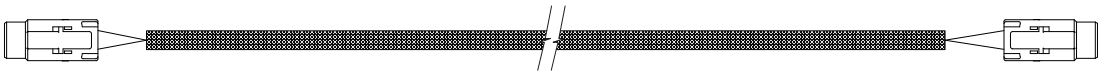

SIGNAL	CAN	WIRE/COLOR
CAN H	1	Twisted Pair Yellow
CAN L	2	Twisted Pair Green

PRODUCT CONTROL MODULE CABLE

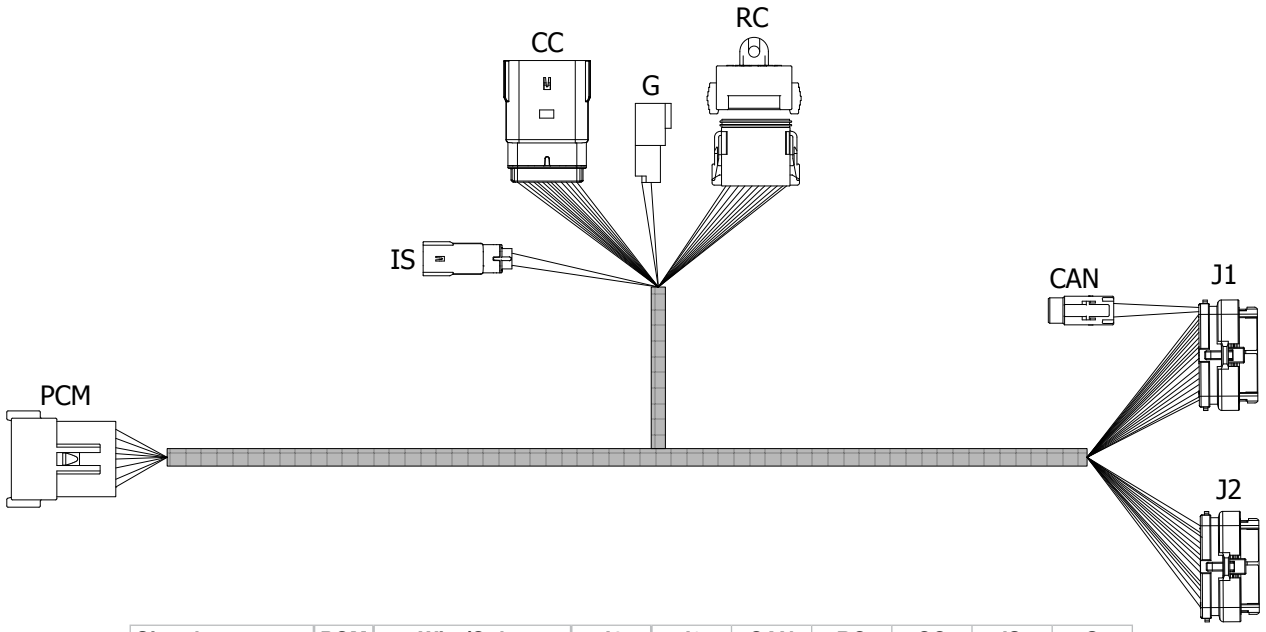

Signal	PCM	Wire/Color	J1	J2	CAN	RC	CC	IS	G
Load Power	1	Red	2	-	-	-	-	-	-
Load Power	2	Red	3	-	-	1	-	-	-
Load Power	3	Red	4	-	-	-	-	-	-
Load Power	4	Red	5	-	-	-	-	1	-
Load Ground	5	Black	-	-	-	-	-	-	1, 2
Load Ground	6	Black	14, 15	-	-	-	-	-	-
Load Ground	7	Black	16	-	-	2	-	-	-
Load Ground	8	Black	17	-	-	-	-	-	-
ECU Power	11	White/Red	11	-	-	-	-	-	-
CAN H	-	Twisted Pair Yellow	34	-	1	-	-	-	-
CAN L	-	Twisted Pair Green	33	-	2	-	-	-	-
Switch In	-	Red/Green	10	-	-	-	-	2	-
Section 1	-	White	24	-	-	-	1	-	-
Section 2	-	Green	25	-	-	-	2	-	-
Section 3	-	Orange	26	-	-	-	3	-	-
Section 4	-	Blue	27	-	-	-	4	-	-
Section 5	-	Brown	-	11	-	-	5	-	-
Section 6	-	Yellow	-	10	-	-	6	-	-
Section 7	-	Violet	-	9	-	-	7	-	-
Section 8	-	Gray	-	8	-	-	8	-	-
Section 9	-	Pink	-	7	-	-	9	-	-
Section 10	-	Tan	-	6	-	-	10	-	-
Section 11	-	Red/Green	-	5	-	-	11	-	-
Section 12	-	Black/Red	-	4	-	-	12	-	-
PWM 1 Power	-	Red/White	-	23	-	3	-	-	-
PWM 1 Ground	-	Black/White	35	-	-	4	-	-	-
PWM 2 Power	-	Red/Yellow	-	12	-	5	-	-	-
PWM 2 Ground	-	Black/Yellow	12	-	-	6	-	-	-
PWM 3 Power	-	Red/Blue	1	-	-	7	-	-	-
PWM 3 Ground	-	Black/Blue	-	24	-	8	-	-	-
Meter Speed 1	-	Green	30	-	-	9	-	-	-
Meter Speed 2	-	Green/White	29	-	-	10	-	-	-
Meter Speed 3	-	Green/Red	-	33	-	11	-	-	-

IMPLEMENT SWITCH EXTENSION CABLE

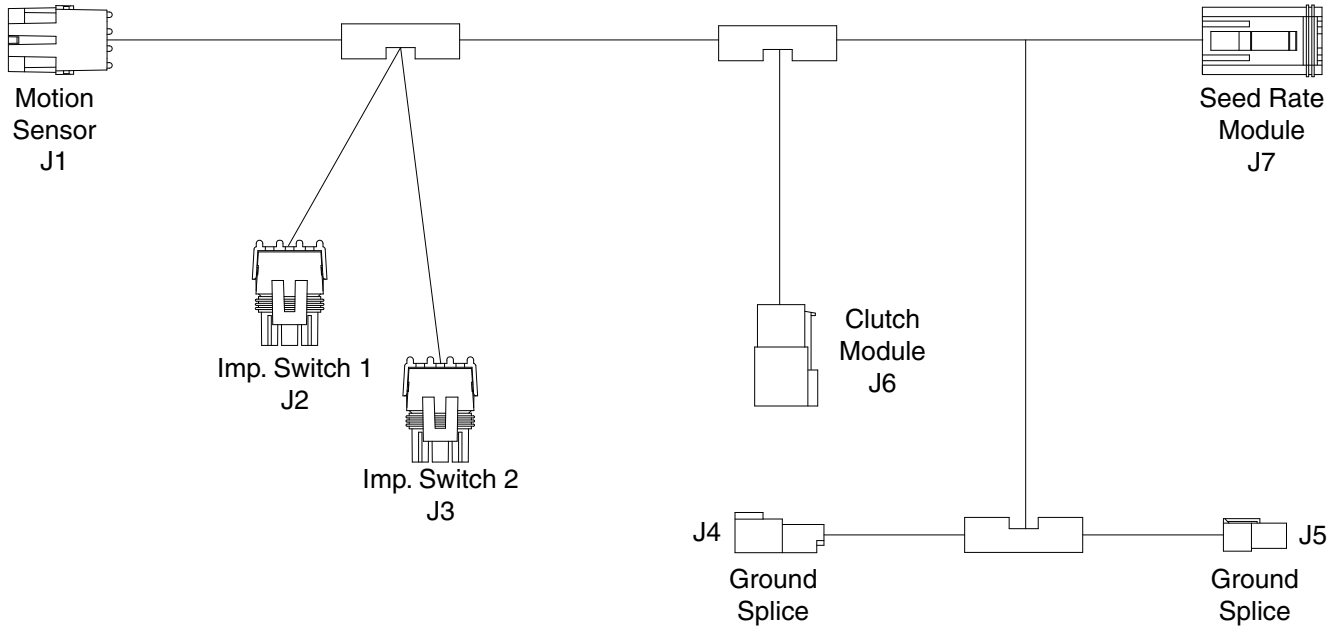

Signal	Imp. Switch 1 WP Tower 1	Imp. Switch 2 WP Tower 2	Motion Sensor WP Shroud	Color	Clutch Module Molex Recept	Seed Rate Module Deutcsch Plug	Ground Splice 1	Ground Splice 2	Gauge
12V+ Power	A	A	-	Brown	1	12	-	-	16
Switch Signal	B	B	-	Green	2	10	-	-	16
Motion Signal	-	-	C	White	-	11	-	-	16
Ground	-	-	B	Black	-	6	-	-	16
12V+ Power	-	-	A	Red	-	1	-	-	16
Ground	C (Blue 16 AWG)	C (Blue 16 AWG)	-	Black	-	-	2	2	12
12V+ Power	-	-	-	Red	-	-	1	1	12

SECTION ADAPTER CABLE - 24 ROW

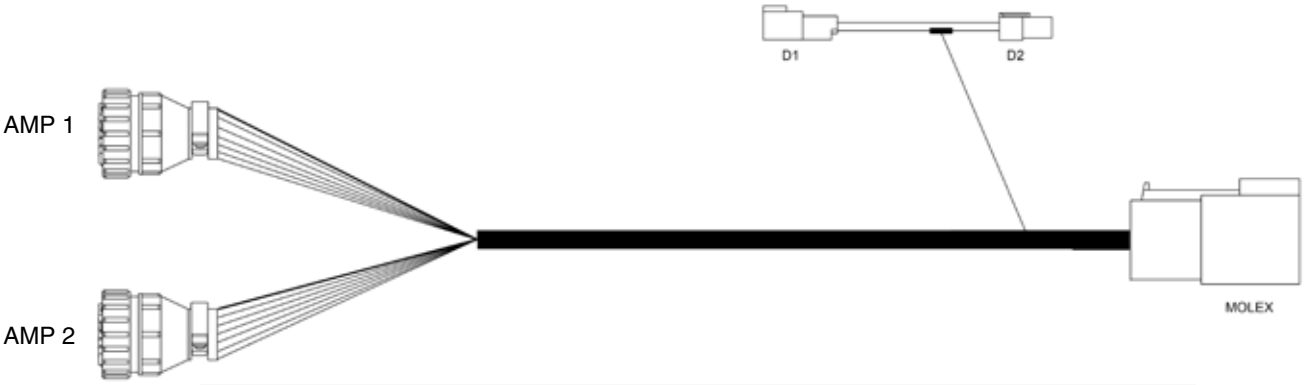

Signal	Color	AMP 1 (Left)	AMP 2 (Right)	Molex	D1	D2
High Current Power	Red	1 (16 Gauge)	1 (16 Gauge)	-	1 (12 Gauge)	1 (12 Gauge)
Ground	Black	-	-	-	2	2
Row 1, 2	Black	2, 3	-	1	-	-
Row 3, 4	Brown	4, 5	-	2	-	-
Row 5, 6	Orange	6, 7	-	3	-	-
Row 7, 8	Pink	8, 9	-	4	-	-
Row 9, 10	Green	10, 11	-	5	-	-
Row 11, 12	Yellow	12, 13	-	6	-	-
Row 13, 14	Blue	-	12, 13	7	-	-
Row 15, 16	Violet	-	10, 11	8	-	-
Row 17, 18	Red	-	8, 9	9	-	-
Row 19, 20	Tan	-	6, 7	10	-	-
Row 21, 22	Gray	-	4, 5	11	-	-
Row 23, 24	White	-	2, 3	12	-	-

SECTION ADAPTER CABLE - 36 ROW

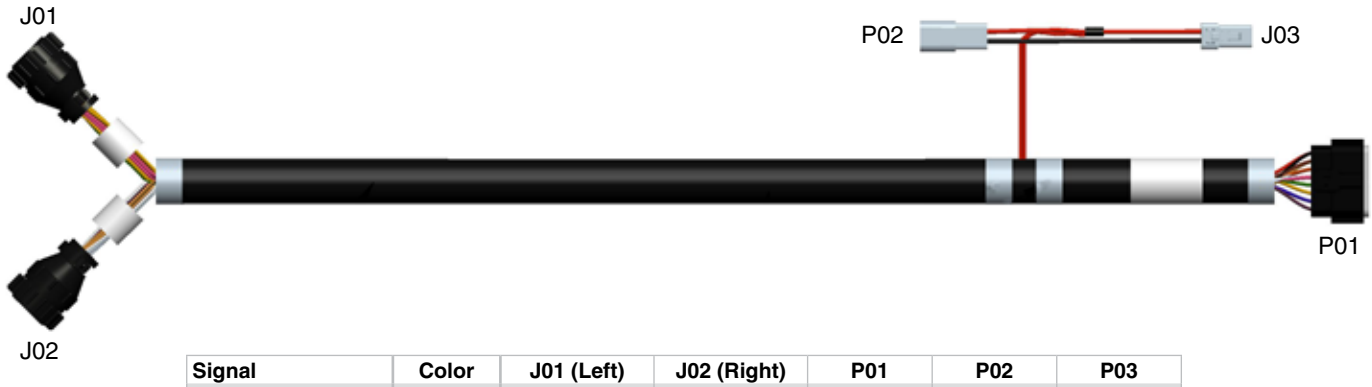

Signal	Color	J01 (Left)	J02 (Right)	P01	P02	P03
Power	Red	1	1	-	1	1
Ground	Black	-	-	-	2	2
Row 1, 2, 3	Black	2, 3, 4	-	1	-	-
Row 4, 5, 6	Brown	5, 6, 7	-	2	-	-
Row 7, 8, 9	Orange	8, 9, 10	-	3	-	-
Row 10, 11, 12	Pink	11, 12, 13	-	4	-	-
Row 13, 14, 15	Green	14, 15, 16	-	5	-	-
Row 16, 17, 18	Yellow	17, 18, 19	-	6	-	-
Row 19, 20, 21	Blue	-	17, 18, 19	7	-	-
Row 22, 23, 24	Violet	-	14, 15, 16	8	-	-
Row 25, 26, 27	Red	-	11, 12, 13	9	-	-
Row 28, 29, 30	Tan	-	8, 9, 10	10	-	-
Row 31, 32, 33	Gray	-	5, 6, 7	11	-	-
Row 34, 35, 36	White	-	2, 3, 4	12	-	-

CLUTCH CABLE - 24 ROW

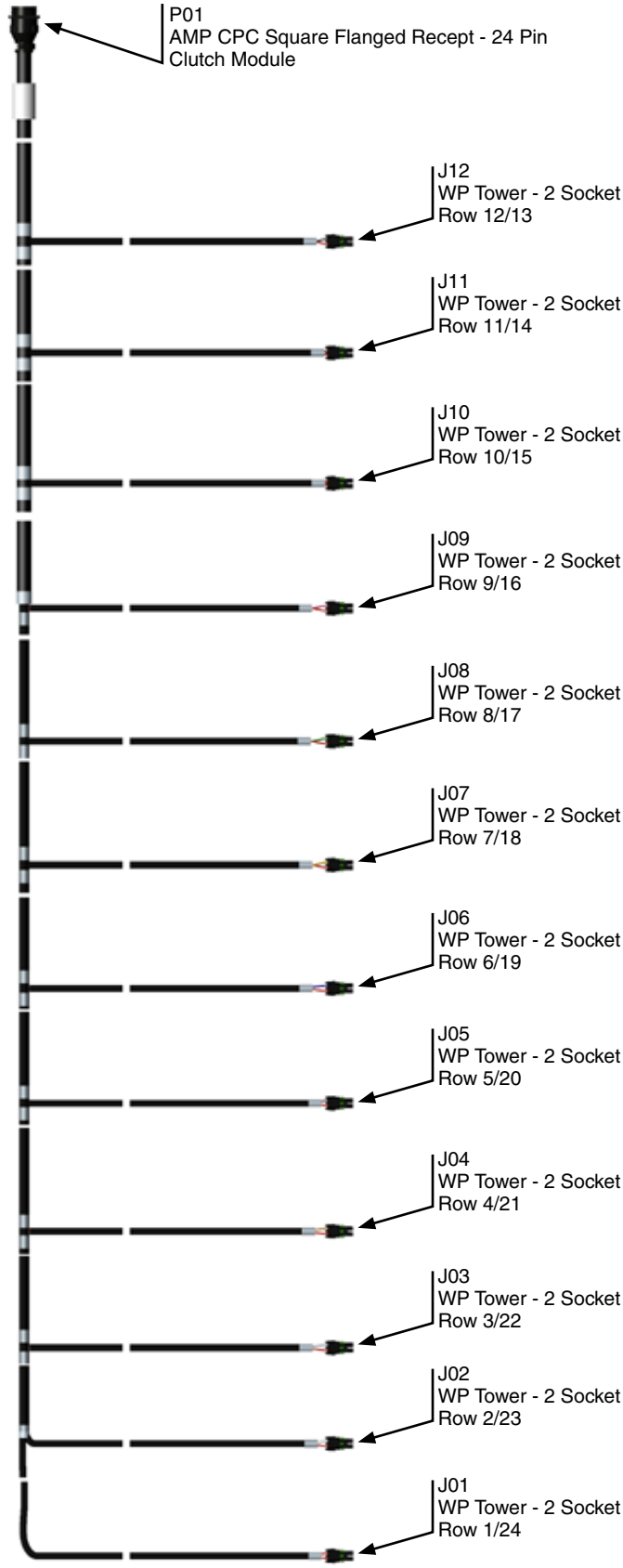

Signal	Clutch Cable	Row 1/24	Row 2/23	Row 3/22	Row 4/21	Row 5/20	Row 6/19	Row 7/18	Row 8/17	Row 9/16	Row 10/15	Row 11/14	Row 12/13
Power	1	A	A	A	A	A	A	A	A	A	A	A	A
Row 1/24	2	B											
Row 2/23	3		B										
Row 3/22	4			B									
Row 4/21	5				B								
Row 5/20	6					B							
Row 6/19	7						B						
Row 7/18	8							B					
Row 8/17	9								B				
Row 9/16	10									B			
Row 10/15	11										B		
Row 11/14	12											B	
Row 12/13	13												B

CLUTCH CABLE - 36 ROW

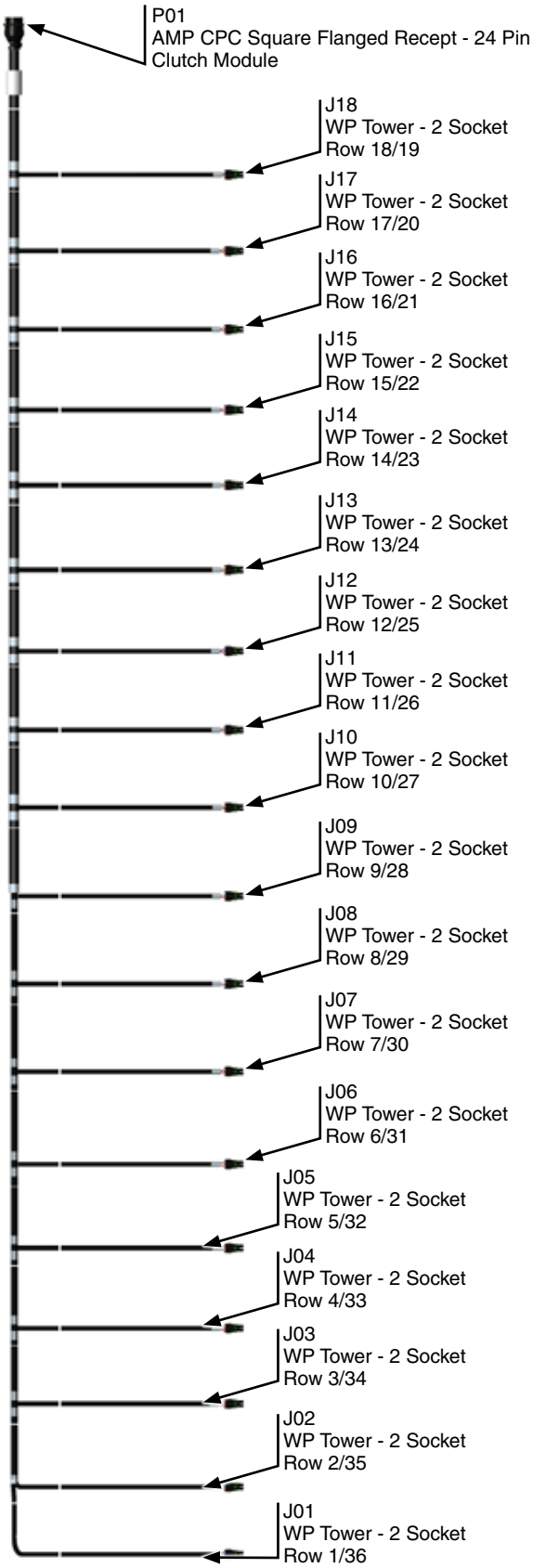

Signal	Clutch Cable	Row 1/36	Row 2/35	Row 3/34	Row 4/33	Row 5/32	Row 6/31	Row 7/30	Row 8/29	Row 9/28	Row 10/27	Row 11/26	Row 12/25	Row 13/24	Row 14/23	Row 15/22	Row 16/21	Row 17/20	Row 18/19
Power	1	A	A	A	A	A	A	A	A	A	A	A	A	A	A	A	A	A	A
Row 1/36	2	B																	
Row 2/35	3		B																
Row 3/34	4			B															
Row 4/33	5				B														
Row 5/32	6					B													
Row 6/31	7						B												
Row 7/30	8							B											
Row 8/29	9								B										
Row 9/28	10									B									
Row 10/27	11										B								
Row 11/26	12											B							
Row 12/25	13												B						
Row 13/24	14													B					
Row 14/23	15														B				
Row 15/22	16															B			
Row 16/21	17																B		
Row 17/20	18																	B	
Row 18/19	19																		B

BULK FILL

PROBLEM	POSSIBLE CAUSE	SOLUTION
Seed does not travel through delivery tubes.	System pressure set too low.	Increase system pressure.
Seed stops flowing to row unit during planting.	Seed surging.	Shut down bulk fill system and restart system from idle; seed should start flowing.
	Debris in system.	Insert shutoff door, open cleanout door. remove plug.
Seed does not move from entrainer at startup after exposure to water.	Seed swelled in entrainer.	Insert shutoff door, open cleanout door. remove swelled seed.

CLOSING WHEEL

PROBLEM	POSSIBLE CAUSE	SOLUTION
Closing wheel(s) leave severe imprint in soil.	Too much closing wheel down pressure.	Adjust closing wheel pressure.
Closing wheel(s) not firming soil around seed.	Not enough closing wheel down pressure.	Adjust closing wheel pressure. Severe no till conditions may require use of cast iron closing wheels.
“V” closing wheel running on top of seed furrow.	Improper centering.	Align. See “V Closing Wheel Adjustment”.
Single closing wheel not directly over seed.	Improper centering.	Align. See “Covering Discs/Single Press Wheel Adjustment”.

LIFT CIRCUIT

PROBLEM	POSSIBLE CAUSE	SOLUTION
Field turn around toolbar height is not 39”-41”.	Stroke limiter valve is out of adjustment.	Consult your Kinze Dealer for service.
Planter not leveling out when lowering from transport.	Detent lever valve out of adjustment.	Consult your Kinze Dealer for service.
Planter settles.	Lift cylinder leaking.	Repair or replace cylinder.

PISTON PUMP

PROBLEM	POSSIBLE CAUSE	SOLUTION
Pump hard or impossible to prime.	Valves fouled or in wrong place.	Inspect and clean valves.
	Air leak in suction line.	Repair leak.
	Pump set too low.	Adjust pump setting.
	Packing washers worn out.	Replace.
Low metering.	Valves fouled or in wrong place.	Inspect and clean valves.
	Air leak in suction line.	Repair leak.
	Pump set too low.	Adjust pump setting.
	Broken valve spring.	Replace spring.
Over meters.	Broken discharge valve spring.	Replace spring.
	Trash under valves.	Inspect and clean valves.
	Improper rate setting.	Adjust pump setting.
Leaks through when stopped.	Broken discharge valve spring.	Replace spring.
	Trash under valves.	Inspect and clean valves.
Fertilizer solution leaking under stuffing box.	Packing washers worn out.	Replace.
Pump using excessive oil.	Oil seals or O-ring worn and leaking.	Replace.
Pump operates noisily.	Crankcase components worn excessively.	Inspect and replace if necessary.

STROKE LIMITER VALVE

PROBLEM	POSSIBLE CAUSE	SOLUTION
Planter will not raise.	Poppet not moving freely in adapter and mechanical stop has poppet pushed completely in with no air gap.	Remove adapter from valve block. Check movement of poppet in adapter. It should move freely. If not, remove poppet from adapter and clean seal area. Inspect poppet stem for damage.
Planter will not stop at the raised field position.	Mechanical stop arm not adjusted correctly.	Adjust mechanical stop arm.
External leak.	Worn or damaged O-rings.	Install seal kit.

POINT ROW CLUTCH

PROBLEM	POSSIBLE CAUSE	SOLUTION
No clutches disengage.	Main fuse blown in control console.	Replace defective fuse.
	Poor terminal connection in wiring harness.	Repair or replace.
	Wiring damage in wiring harness.	Repair or replace.
	Low voltage at coil. (12 volts required)	Check battery connections.
One section of planter will not re-engage.	Shear pin at seed drive transmission(s) sheared.	Replace pin with one of equal size and grade.
One clutch will not engage.	Fuses blown.	Replace defective fuses.
	Actuator arm and plunger stuck in disengaged position.	Remove, free up, and reinstall.
	Actuator arm out of adjustment.	Adjust actuator arm mounting pin in slot so that actuator arm clears stop on stop collar by approximately 1/8" when clutch is rotated.
	Wrap spring broken or stretched.	Disassemble clutch and replace spring.
	Something touching the stop collar.	Check to ensure collar is free to turn with clutch.
	Clutch assembled incorrectly.	Check clutch and diagram for correct assembly.
Clutch slipping.	Wrap spring stretched.	"Lock" clutch output shaft from turning. Place torque wrench on input shaft and rotate in direction of drive. After input shaft has rotated a short distance the wrap spring should tighten onto the input hub. If slippage occurs at less than 100 ft. lbs. replace spring. If spring still slipsafter installing new spring, replace input hub.
Planter section does not re-engage while planter is moving forward.	Spring in actuator arm not strong enough to push arm operational switch is turned to the ON position.	Remove spring from inside solenoid and stretch spring slightly or replace. Reinstall spring. If that fails, file the away from stop collar when stop on the stop collar slightly so that the stop is not as aggressive.
Frequent solenoid burnout.	Fuses too large.	Replace fuses on front panel with 10 amp slow blow fuses.
Frequent fuse burnout.	Low voltage (12 volts required).	Check power source voltage for partially discharged battery, etc.
	Damage to wiring harness.	Repair or replace harness.
Clutch or clutches will not disengage.	Input and output shafts out of alignment.	Align input and output shafts to prevent drag.
	Input or output shaft is pushed in too far creating a coupler.	Reposition input and output shafts.

PTO PUMP DRIVE AND OIL COOLER OPTION

PROBLEM	POSSIBLE CAUSE	SOLUTION
Pump is squealing.	Lack of oil to pump.	Check for plugged suction strainer. Check oil level.
Oil temperature high.	Low oil level.	Check oil level and add as required.
Desired fan speed cannot be achieved.	Low oil level.	Check oil level and add as required.
	Plugged filter.	Check and change as required.
Vacuum level not displayed.	Digital vacuum gauge console power OFF.	Turn ON.
	Cable not plugged in.	Check connection.
	Digital vacuum gauge console has no power.	Check fuse.

ROW MARKER OPERATION

PROBLEM	POSSIBLE CAUSE	SOLUTION
Right marker lowering slower than left marker.	Solenoid valve cartridge in port V1 not opening completely.	Switch with cartridge in port V2. If problem repeats, replace cartridge.
	Hose pinched or collapsed.	Inspect hose routing. Replace or repair hoses as required.
Left marker lowering slower than right marker.	Solenoid valve cartridge in port V2 not opening completely.	Switch with cartridge in port V1. If problem repeats, replace cartridge.
	Hose pinched or collapsed.	Inspect hose routing. Replace or repair hoses as required.
Both markers lowering.	Solenoid valve cartridge stuck open. If left marker switch is selected, right cartridge (V1) is defective. If right marker switch is selected, left cartridge (V2) is defective.	Replace solenoid valve cartridge.
Neither marker lowers.	Blown fuse.	Check red light on control console. It should be on if switch is on. If light is not on, switch to opposite marker position. If light comes on, switch may be defective. Replace switch. Otherwise replace fuse.
	Coils at V1 and V2 not energized.	Poor ground on wire, bad wire connection or damaged wire. Repair as required.
	Marker flow control valve closed too far.	See “Row Marker Speed Adjustment”.
Neither marker will raise.	Marker flow control valve closed too far.	See “Row Marker Speed Adjustment”.
Right marker will not lower.	Solenoid coil in port V1 not energized.	Check switch on control console. Replace if defective. Check coil ground wire. Check for poor connection or damaged wire.
	Solenoid cartridge in port V1 stuck closed.	Switch cartridge with one on the planter you know is operating properly. If right marker lowers, replace defective cartridge.
Left marker will not lower.	Solenoid coil in port V2 not energized.	Check switch on control console. Replace if defective. Check coil ground wire. Check for poor connection or damaged wire.
	Solenoid cartridge in port V2 stuck closed.	Switch cartridge with one on the planter you know is operating properly. If left marker lowers, replace defective cartridge.
Markers traveling too fast and damaging rubber stop on transport stands and/or damaging pivot at rod end of marker cylinders.	Marker transport stand not adjusted correctly to allow marker cushion cylinders to operate as designed.	See “Row Marker Transport Stand Adjustment”.
	Adjust row marker flow control valve.	See “Row Marker Speed Adjustment”.

SEED METER (BRUSH-TYPE)

PROBLEM	POSSIBLE CAUSE	SOLUTION
Low count.	Meter RPM too high.	Reduce planting speed.
	Seed sensor not picking up all seeds dropped.	Clean seed tube. Switch meter to different row. If problem stays in same row, replace sensor.
	Lack of lubrication causing seeds not to release from disc properly.	Use graphite or talc as recommended.
	Seed size too large for seed disc being used.	Switch to smaller seed or appropriate seed disc. See “Brush-Type Seed Meter” for proper seed disc for size of seed being used.
	Seed treatment buildup in meter.	Reduce treatment amount used. Thoroughly mix treatment with seed. Add talc.
Low count at low RPM and higher count at higher RPM.	Foreign material lodged in upper brush.	Remove seed disc and remove foreign material from between brush retainer and bristles. Clean thoroughly.
	Worn upper brush.	Replace. See “Brush-Type Seed Meter Maintenance”.
Low count at higher RPM and normal count at low RPM.	Seed disc worn in agitation groove area.	Replace disc. Replace. See “Brush-Type Seed Meter Maintenance”.
High count.	Seed size too small for seed disc.	Switch to larger or appropriate seed disc.
	Incorrect seed rate transmission setting.	Reset transmission. Refer to rate charts.
	Upper brush too wide (fanned out) for small seed size.	Replace upper brush.
High count. (Milo/Grain Sorghum)	Incorrect brush retainer being used.	Make sure GD8237 brush retainer is used to keep upper brush from fanning out.
Upper brush laid back.	Seed treatment buildup on brush.	Remove brush. Wash with soap and water. Dry thoroughly before reinstalling.
	Foreign material buildup at base of brush.	Remove brush retainer and brush. Clean thoroughly. Reinstall.

SOLENOID VALVE

PROBLEM	POSSIBLE CAUSE	SOLUTION
No solenoids operate.	Low voltage.	Must be connected to 12 volt DC only. Negative ground.
	Blown fuse.	Replace control console fuse with AGC-15 amp.
	Battery connection.	Clean and tighten.
	Wiring harness damaged.	Repair or replace.
One solenoid valve will not operate.	Bad switch.	Replace on control panel.
	Cut wire in harness.	Locate and repair.
	Bad coil.	Replace.
	Poor connection at coil.	Check.
Valve operating when not energized.	Valve stem stuck open.	Replace cartridge.
	O-ring leaking.	Install new O-ring kit.
	Foreign material under poppet.	Remove and clean cartridge.

VACUUM SEED METER

PROBLEM	POSSIBLE CAUSE	SOLUTION
Low seed count.	Meter RPM too high.	Reduce planting rate or planting speed.
	Singulator blade setting too aggressive.	Adjust singulator blade.
	Vacuum level too low.	Increase fan speed.
	Seed sensor not picking up all seeds dropped.	Clean seed tube. Move meter to different row.
	Seeds sticking to seed disc.	Use graphite or talc to aid release.
	Seed treatment buildup in seed disc recesses.	Reduce amount of treatment used and or mix thoroughly. Add talc.
	Seed size too large for disc used.	Use appropriate disc for seed size.
	Wrong seed disc.	Use appropriate disc for seed type and size.
	Failed/worn drive components.	Inspect and replace parts as required.
	Plugged orifices in seed disc.	Inspect and clean disc. Check remnant ejector.
	Loss of vacuum at meter.	Check for foreign material between vacuum cover and disc. Inspect parts for wear/damage. Clean or replace as required.
	Seed bridging in hopper.	Add graphite to improve seed flow.
	Faulty vacuum gauge reading.	Repair/replace gauge.
	Dirt in vacuum manifold.	Check vacuum manifold for dirt and clean.
	Seed baffle (If applicable) not allowing seed flow due to bridging of seed.	Mix talc thoroughly to coat all seeds. Remove seed baffle. See Row Unit Operation section.
	Seed disc worn.	Replace.
	Vacuum seal worn.	Replace.
Not planting seed.	Seed hoppers empty.	Fill seed hopper.
	Seed tube plugged/damaged.	Clean or replace tube.
	Meter drive damaged.	Repair/replace drive components.
	Low/no vacuum.	Inspect vacuum system and repair as necessary.
	Singulator blade setting too aggressive.	Adjust singulator blade.
	Faulty vacuum gauge.	Repair/replace vacuum gauge.
	Seed bridging in hopper.	Add graphite to improve seed flow.
	Loss of vacuum at meter.	Check for foreign material between vacuum cover and disc. Inspect parts for wear/ damage. Clean and/or replace as required.
	Wrong seed disc.	Use appropriate disc for seed type and size.
	Meter drive clutch not engaged.	Engage drive clutch.
	Fan not running.	Start fan.
	Dirt in vacuum manifold.	Check vacuum manifold for dirt and clean.

VACUUM SEED METER - Continued

PROBLEM	POSSIBLE CAUSE	SOLUTION
Not planting seed. (Continued)	Seed baffle (if applicable) not allowing seed flow due to bridging of seed.	Mix talc thoroughly to coat all seeds. Remove seed baffle. Row Unit Operation section.
	High vacuum.	Adjust vacuum level to appropriate level.
	Wrong seed disc.	Replace seed disc.
	Singulator setting not aggressive enough.	Adjust singulator.
	Faulty vacuum gauge.	Check gauge line for dirt/obstruction. Repair/replace vacuum gauge.
Poor seed spacing.	Obstruction in seed tube.	Clean seed tube.
	Dirty/damaged seed disc.	Inspect seed disc for damage, foreign material in orifices or seed treatment buildup in recesses. Clean or replace.
	Wrong vacuum setting.	Adjust vacuum to appropriate level.
	Excess foreign material in seed.	Inspect and clean meter and seed discs. Use clean, undamaged seed.
	Incorrect singulator setting.	Adjust singulator to appropriate setting.
	Inconsistent driveline.	Inspect drive components for rust, misalignment, worn or damaged parts. Replace/repair as required.
	Toolbar not level or wrong height.	Adjust hitch to level toolbar and row units.
	Planting too fast for conditions.	Reduce speed.
	Rough field conditions.	Reduce speed.
Irregular seed population.	Driving too fast.	Reduce speed.
Unable to achieve desired vacuum level.	Tractor hydraulic flow set too low.	Increase flow to fan motor.
	Incorrect hydraulic connections.	Check all hydraulic connections and hose routings.
	Damaged fan components.	Inspect motor and impeller for wear/damage and repair/replace as necessary.
	Vacuum hose pinched/kinked/blocked.	Inspect air lines for any damage or obstruction. Clean air lines and manifold by removing end cap from manifold and running fan at high speed.
	Vacuum hose loose/disconnected.	Inspect and reattach all air hoses.
	Tractor not producing required hydraulic flow/ pressure.	Have tractor serviced by qualified technician.
	Dirt in vacuum gauge line.	Check gauge line for dirt/obstruction and clean.

SEED METER (FINGER PICKUP)

PROBLEM	POSSIBLE CAUSE	SOLUTION
One row not planting seed.	Drive release not engaged.	Engage drive release mechanism.
	Foreign material in hopper.	Clean hopper and finger carrier mechanism.
	Seed hopper empty.	Fill seed hopper.
	Row unit drive chain off of sprocket or broken.	Check drive chain.
Unit is skipping.	Foreign material or obstruction in meter.	Clean and inspect.
	Finger holder improperly adjusted.	Adjust to specifications. (22 to 25 in. lbs. rolling torque)
	Broken fingers.	Replace fingers and/or springs as required.
	Planting too slowly.	Increase planting speed to within recommended range.
Planting too many doubles.	Planting too fast.	Stay within recommended speed range.
	Loose finger holder.	Adjust to specifications. (22 to 25 in. lbs. rolling torque)
	Worn brush in carrier plate.	Inspect and replace if necessary.
Overplanting.	Worn carrier plate.	Inspect and replace if necessary.
	Seed hopper additive being used.	Reduce or eliminate additive or increase graphite.
Underplanting.	Seed belt installed backwards.	Remove and install correctly.
	Weak or broken springs.	Replace.
	Spring not properly installed.	Remove finger holder and correct.
	Seed belt catching or dragging.	Replace belt.
	Brush dislodging seed.	Replace brush.
Irregular or incorrect seed spacing.	Driving too fast.	Check chart for correct speed.
	Wrong tire pressure.	Inflate tires to correct air pressure.
	Drive wheels slipping.	Reduce down pressure on row unit down force springs.
	Wrong sprockets.	Check seed rate charts for correct sprocket combinations.
Seed spacing not as indicated in charts.	Wrong tire pressure.	Inflate tires to correct air pressure.
	Inconsistent seed size.	Perform field check and adjust sprockets.
	Wrong sprockets.	Check chart for correct sprocket combination.
	Charts are approximate.	Slight variations due to wear in meter components and tire slippage due to field conditions may produce seed spacing variations.
	Stiff or worn drive chains.	Replace chains.
Scattering of seeds.	Planting too fast.	Reduce planting speed.
	Seed tube improperly installed.	Check seed tube installation.
	Seed tube worn or damaged.	Replace seed tube.
Seed tubes and/or openers plugging.	Allowing planter to roll backward when lowering.	Lower planter only when tractor is moving forward.
Inconsistent seed depth.	Rough seed bed.	Adjust down pressure springs. Reduce planting speed.
	Partially plugged seed tube.	Inspect and clean.
	Seed tube improperly installed.	Install properly.